INSTRUCTIONS

1. GROUP CODE : REPRESENTS CODE CORRESPONDING TO EACH GROUP NAME.
2. GROUP NAME : DETAIL CLASSIFICATION NAME FOR PARTS.
3. SECTION NAME : CLASSIFICATION NAME FOR PARTS.
4. COMPONENTS : THE COMPONENTS OF AN ASSEMBLY ARE IDENTIFIED BY A BRACKET.
5. NO. : REFERENCE NUMBERS ARE ASSIGNED TO PARTS IN THE FIGURE.
6. BLANK PART NUMBER : PART NOT AVAILABLE. WHEN YOU ORDER THIS PART, PLEASE ORDER BY ASSEMBLY.
7. REMARKS : DIMENSIONS AND OTHER SPECIAL ITEMS.
8. SERIAL NUMBER : IDENTIFICATION NUMBER FOR EACH TRACTOR.
9. INTERCHANGEABILITY : INDICATES THE INTERCHANGEABILITY OF PARTS DUE TO DESIGN CHANGE.

INDICATES THAT A NEW PART CAN BE USED INSTEAD OF AN OLD PART
WHEN YOU ORDER THIS PART, PLEASE ORDER NEW PART(E5700-73382).

INDICATES THAT EITHER PARTS CAN BE USED.

~4265-9999
5265-0001~

INDICATES THAT A PART HAS A SERIAL NUMBER BREAK.
WHEN YOU ORDER THIS PART, PLEASE ORDER A PART ACCORDING TO
THE SERIAL NUMBER OF THE TRACTOR

FOR TRACTORS BEFORE SERIAL NUMBER 4265-9999, THE FOLLOWING
PARTS MUST BE REPLACE TOGETHER: REF NO. 01,02,03 (PAGE)

10. THIS PARTS LIST IS FOR FOLLOWING PURPOSES. WHEN ORDERING PARTS, CHECK WITH THIS PARTS LIST TO CONFIRM THE PART NUMBER AND THE NAME OF PARTS. WHEN MAKING REPAIRS, REFER TO THE ILLUSTRATIONS IN THIS PARTS LIST.
THIS PARTS LIST IS SUBJECT TO CHANGE WITHOUT NOTICE. DUE TO OUR POLICY OF CONTINUOUSLY IMPROVING PRODUCTS, THE INFORMATION CONTAINED HEREIN IS SUBJECT TO CHANGE WITHOUT NOTICE.

11. THE SPECIFICATIONS OF EACH MODEL ARE PARTIALLY DIFFERENT FOR THE BELOW TRACTOR WHEN YOU ORDER A SPARE PARTS, YOU HAVE TO ORDER IT ACCODING TO EACH COUNTRY.

MODEL	CK20	CK20J	CK20H	CK20HJ	CK20-EU	CK20J-EU	CK20H-EU	CK20HJ-EU
COUNTRY	USA				EUROPE			
MODEL	CK20-NL	CK20J-NL	CK20H-NL	CK20HJ-NL	CK20-SP	CK20J-SP	CK20H-SP	CK20HJ-SP
COUNTRY	NETHERLAND				SPAIN			
MODEL	CK20J-FR	CK20HJ-FR	CK20J-IT	CK20HJ-IT	CK20J-AU	CK20HJ-AU	CK20J-EN	CK20HJ-EN
COUNTRY	FRANCE		ITALY		AUSTRALIA, NEW ZEALAND		U.K	

12. THE MEANING OF THE MODEL

(FOR EXAMPLE)

CK20FR : MANUAL TRACTOR/FRANCE
CK20FR-J : MANUAL JOYSTICK TRACTOR/FRANCE
CK20FR-H : HST TRACTOR/FRANCE
CK20FR-HJ : HST JOYSTICK TRACTOR/FRANCE

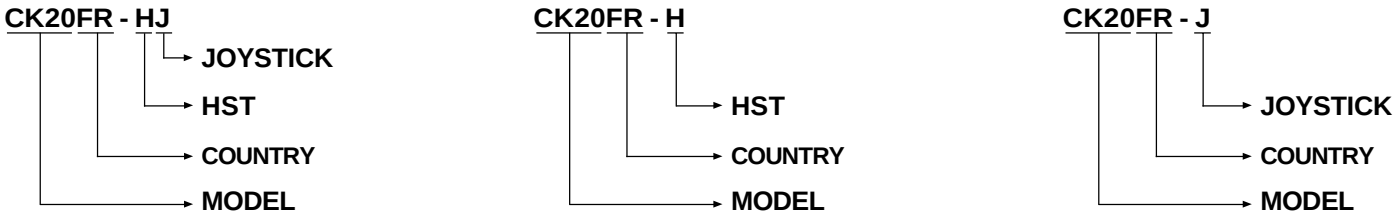

TABLE OF CONTENTS

E010	CYLINDER BLOCK GROUP	8
E020	OIL PAN GROUP	12
E030	CYLINDER HEAD GROUP	14
E040	GEAR CASE GROUP	16
E050	MAIN BEARING CASE GROUP	20
E060	VALVE, ROCKER ARM GROUP (Old Revision : ~D257-00642)	22
E060A	VALVE, ROCKER ARM GROUP (New Revision : E257-00001~)	24
E070	CYLINDER HEAD COVER GROUP (Old Revision : ~D257-00642)	26
E070A	CYLINDER HEAD COVER GROUP (New Revision : E257-00001~)	30
E080	CAMSHAFT GROUP	32
E090	PISTON, CRANKSHAFT GROUP	34
E100	FLYWHEEL GROUP	38
E110	NOZZLE HOLDER GROUP	40
E120	FUEL CAM SHAFT GROUP	42
E130	SPEED CONTROL LEVER GROUP	46
E140	ENGINE STOP LEVER GROUP	50
E150	GOVERNOR GROUP	54
E160	WATER PUMP GROUP	56
E170	WATER PIPE GROUP	58
E180	DYNAMO GROUP	60
E190	MANIFOLD GROUP	62
T010	AIRCLEANER GROUP	64
T020	MUFFLER GROUP	66
T030	RADIATOR GROUP	68
T040	WATER TANK GROUP	72
T100	CLUTCH GROUP	74
T110	CLUTCH LEVER GROUP	76
T120	CLUTCH PEDAL GROUP	78
T130	CLUTCH HOUSING 1 GROUP	80

T140	CLUTCH HOUSING 2 GROUP	82
T150	HST CASE GROUP	84
T160	MIDDLE CASE GROUP	86
T170	TRANSMISSION CASE GROUP	88
T180	MAIN SHAFT GROUP	90
T190	HST OUTPUT SHAFT GROUP	92
T200	COUNTER SHAFT GROUP	94
T210	RANGE SHAFT GROUP	98
T220	PTO DRIVING SHAFT GROUP	100
T230	PTO SHAFT GROUP	102
T240	MID PTO SHAFT GROUP	104
T250	SPIRAL BEVEL GEAR GROUP	106
T260	FRONT WHEEL DRIVING GROUP	108
T270	MAIN SHIFT FORK GROUP	114
T280	MAIN SHIFT LEVER GROUP	116
T290	RANGE SHIFT FORK GROUP	118
T300	RANGE SHIFT LEVER GROUP	120
T310	HST GROUP	122
T311	HST PART GROUP	124
T320	HST CONTROL 1 GROUP	130
T330	HST INNER HYDRAULIC LINE GROUP	132
T340	PTO & MID PTO FORK GROUP	134
T350	PTO & MID PTO LEVER GROUP	136
T360	FRONT WHEEL DRIVING FORK GROUP	138
T370	FRONT WHEEL DRIVING LEVER GROUP	140
T380	REAR DIFFERENTIAL SYSTEM GROUP	142
T390	DIFFERENTIAL LOCK FORK GROUP	144
T400	BRAKE GROUP	146
T401	BRAKE GROUP	150
T405	BRAKE GROUP	154
T410	BRAKE PEDAL GROUP	158

T411	BRAKE PEDAL GROUP	162
T415	BRAKE PEDAL GROUP	166
T420	REAR AXLE GROUP	170
T430	REAR WHEEL GROUP	172
T431	REAR WHEEL GROUP	174
T435	REAR WHEEL GROUP (Option)	176
T436	REAR WHEEL GROUP (Option)	178
T440	FRONT AXLE FRAME GROUP	180
T450	FRONT AXLE SUPPORT GROUP	184
T460	FRONT DIFFERENTIAL GROUP	186
T470	BEVEL PINION SHAFT GROUP	188
T480	DIFFERENTIAL GEAR SHAFT GROUP	190
T490	FRONT AXLE CASE GROUP	192
T500	FRONT AXLE GROUP	194
T510	STEERING CYLINDER GROUP	196
T520	POWER STEERING UNIT GROUP	198
T530	FRONT AXLE BRACKET GROUP	202
T540	PROPELLER SHAFT GROUP	204
T550	FRONT WHEEL GROUP	206
T551	FRONT WHEEL GROUP	208
T555	FRONT WHEEL GROUP (Option)	210
T556	FRONT WHEEL GROUP (Option)	212
T560-1	HYDRAULIC CYLINDER GROUP	214
T561	HYDRAULIC CYLINDER GROUP	216
T560-2	HYDRAULIC CYLINDER GROUP	218
T570-1	HYDRAULIC CYLINDER BODY GROUP	220
T571	HYDRAULIC CYLINDER BODY GROUP	222
T570-2	HYDRAULIC CYLINDER BODY GROUP	224
T580	HYDRAULIC LIFT ARM GROUP	226
T590	HYDRAULIC CONTROL SYSTEM 1 GROUP	228
T600	HYDRAULIC CONTROL SYSTEM 2 GROUP	230

T610	MAIN DISTRIBUTOR VALVE GROUP	232
T620	HST CONTROL 2 GROUP	236
T630	HST CONTROL 3 GROUP	240
T640	GEAR PUMP GROUP	244
T650	SUCTION PIPE GROUP	248
T660	OIL FILLER PIPE GROUP	252
T670	FLOW CONTROL VALVE GROUP	254
T680	HST EXTERNAL HYDRAULIC LINE GROUP	258
T690	JOYSTICK GROUP	262
T691	JOYSTICK (1)	266
T700	EXTERNAL HYDRAULIC VALVE GROUP (Option)	270
T701	DOUBLE ACTING VALVE GROUP (Option)	272
T710	POSITION CONTROL VALVE GROUP	276
T720	DOWN SPEED CONTROL GROUP	278
T730	THREE POINT LINK SYSTEM GROUP	280
T740	DRAWBAR GROUP	284
T750	BONNET 1 GROUP	286
T760	BONNET 2 GROUP	288
T770	BONNET 3 GROUP	292
T780	FRAME GROUP	294
T790	FUEL TANK GROUP	298
T800	ACCELERATOR GROUP	302
T810	INSTRUMENT COVER GROUP	304
T815	INSTRUMENT COVER GROUP	306
T820	FENDER GROUP	308
T825	FENDER GROUP	314
T830	SEAT FLOOR GROUP	320
T831	SEAT FLOOR GROUP	322
T840	STEP GROUP	324
T850	SEAT GROUP	326
T850A	SEAT GROUP	328

T855	SEAT GROUP	330
T856	SEAT GROUP	332
T860	BATTERY GROUP	334
T870	ELECTRICAL SYSTEM 1 GROUP	336
T875	ELECTRICAL SYSTEM 1 GROUP	338
T880	ELECTRICAL SYSTEM 2 GROUP	340
T890	ELECTRICAL SYSTEM 3 GROUP	344
T900	LIGHT GROUP	346
T905	LIGHT GROUP	348
T910	LABEL GROUP	352
T915	LABEL GROUP	356
T916	LABEL GROUP	364
T920	ROPS GROUP (Option)	368
T921	ROPS GROUP (Option)	370
T925	ROPS GROUP (Option)	372
T928	ROPS GROUP (Option)	374
T930	TOWING HOOK GROUP (Option)	376
T931	TOWING HOOK GROUP (Option)	378
T940-1	FRONT WEIGHT GROUP (Option)	380
T940-2	REAR WHEEL WEIGHT GROUP (Option)	382
T960	7 PIN SOCKET GROUP (Option)	384
T970	BACKMIRROR GROUP	386
T971	BACKMIRROR GROUP	388
T975	BACKMIRROR GROUP	390
T980	PARKING BRAKE GROUP	392
T990	WORKING LIGHT GROUP (Option)	396
T1020	SUNSHADE GROUP (Option)	398
INDEX1		401
INDEX2		421
INDEX3		427

E010 CYLINDER BLOCK GROUP

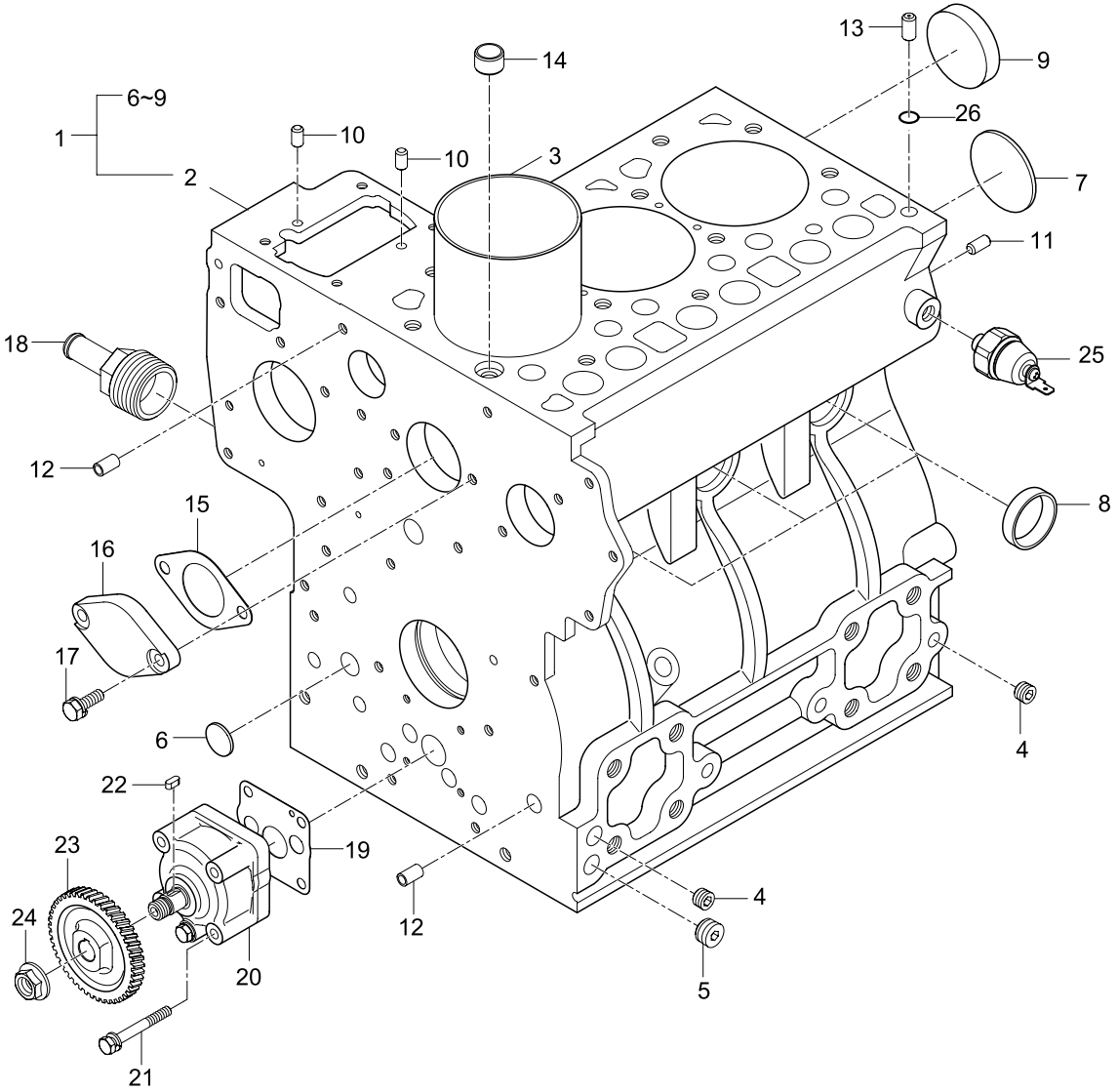

REF. NO	PART. NO	DESCRIPTION	Q'TY								I.C	REMARK
			CK20	CK20J	CK20H	CK20HJ	CK20-EU	CK20J-EU	CK20H-EU	CK20HJ-EU		
01	E5753-A0018	CYLINDER BLOCK ASS'Y	1	1	1	1						
01	E5753-A0019	CYLINDER BLOCK ASS'Y	1	1	1	1						
01	E5753-A0200	CYLINDER BLOCK ASS'Y	1	1	1	1	1	1	1	1		
01	E5753-A0201	CYLINDER BLOCK ASS'Y	1	1	1	1	1	1	1	1		
02		BLOCK, CYLINDER	1	1	1	1	1	1	1	1		Order By 1
03	E5700-02313	LINER, CYLINDER	1	1	1	1	1	1	1	1		
03	E5700-02314	LINER, CYLINDER	1	1	1	1	1	1	1	1		
04	15521-9602-2	PLUG	9	9	9	9	9	9	9	9		
04	E5900-96021	PLUG	9	9	9	9	9	9	9	9		
05	15521-9603-2	PLUG	1	1	1	1	1	1	1	1		
05	E5900-96031	PLUG	1	1	1	1	1	1	1	1		
06	06311-75015	PLUG, EXPANSION	3	3	3	3	3	3	3	3		
07	06311-75040	PLUG, EXPANSION	1	1	1	1	1	1	1	1		
08	15321-9626-3	PLUG, EXPANSION	5	5	5	5	5	5	5	5		
09	15221-0349-3	PLUG, SEALING	1	1	1	1	1	1	1	1		
10	05012-00609	PIN, STRAIGHT	2	2	2	2	2	2	2	2		
11	05012-00814	PIN, STRAIGHT	2	2	2	2	2	2	2	2		
12	E5205-33961	PIN	2	2	2	2	2	2	2	2		
13	15221-3365-1	PIN	1	1	1	1	1	1	1	1		
14	E5753-33811	PIN	1	1	1	1	1	1	1	1		
15	15261-7392-1	GASKET, COVER	1	1	1	1	1	1	1	1		
16	E5205-73911	COVER, WATER	1	1	1	1	1	1	1	1		
17	01023-50618	BOLT	2	2	2	2	2	2	2	2		
18	E5205-73173	JOINT, DRAIN HOSE	1	1	1	1	1	1	1	1		
19	E5700-35152	GASKET, OIL PUMP	1	1	1	1	1	1	1	1		

REF. NO	PART. NO	DESCRIPTION	Q'TY								I.C	REMARK
			CK20	CK20J	CK20H	CK20HJ	CK20-EU	CK20J-EU	CK20H-EU	CK20HJ-EU		
20	E5700-35012	OIL PUMP ASS'Y	1	1	1	1	1	1	1	1		
21	E5205-91021	BOLT	4	4	4	4	4	4	4	4		
22	05712-00408	KEY, FEATHER	1	1	1	1	1	1	1	1		
23	E5700-35662	GEAR, OIL PUMP DRIVING	1	1	1	1	1	1	1	1		
24	E5753-35681	NUT, FLANGE	1	1	1	1	1	1	1	1		
25	E5500-39013	SWITCH, OIL	1	1	1	1	1	1	1	1		
26	E5500-33702	O-RING	1	1	1	1	1	1	1	1		
			3257-00149~	3257-00149~	3257-00149~	3257-00149~	3257-00149~	3257-00149~	3257-00149~	3257-00149~		

E020 OIL PAN GROUP

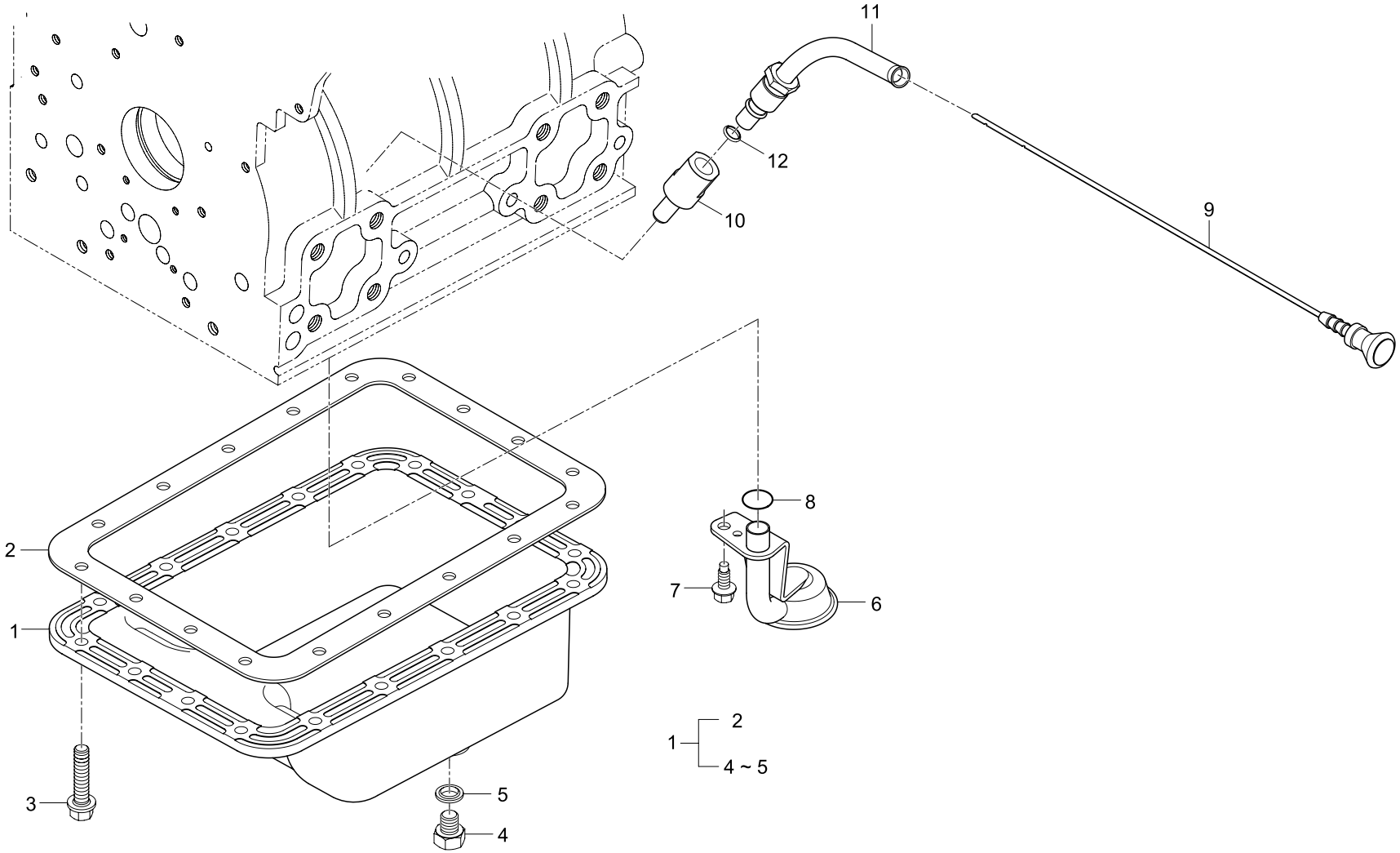

REF. NO	PART. NO	DESCRIPTION	Q'TY								I.C	REMARK
			CK20	CK20J	CK20H	CK20HJ	CK20-EU	CK20J-EU	CK20H-EU	CK20HJ-EU		
01	E5700-A0072	OIL PAN ASS'Y	1	1	1	1	1	1	1	1		
02	E5700-01623	GASKET, OIL PAN	1	1	1	1	1	1	1	1		
03	E5700-91094	BOLT	18	18	18	18	18	18	18	18		
04	15221-3375-2	PLUG, DRAIN	1	1	1	1	1	1	1	1		
05	04717-01200	WASHER, SEAL	1	1	1	1	1	1	1	1		
06	E5700-32112	FILTER 1, OIL	1	1	1	1	1	1	1	1		
07	01654-50820	BOLT, FLANGE	1	1	1	1	1	1	1	1		
08	04811-00140	O-RING	1	1	1	1	1	1	1	1		
09	E5752-36411	GAUGE, OIL	1	1	1	1	1	1	1	1		
09	E5752-36412	GAUGE, OIL	1	1	1	1	1	1	1	1		
10	E5752-35691	GUIDE, OIL GAUGE	1	1	1	1	1	1	1	1		
10	E5752-35692	GUIDE, OIL GAUGE	1	1	1	1	1	1	1	1		
11	E5752-36422	OIL GAUGE GUIDE	1	1	1	1	1	1	1	1		
12	E7310-36431	PACKING	1	1	1	1	1	1	1	1		

E030 CYLINDER HEAD GROUP

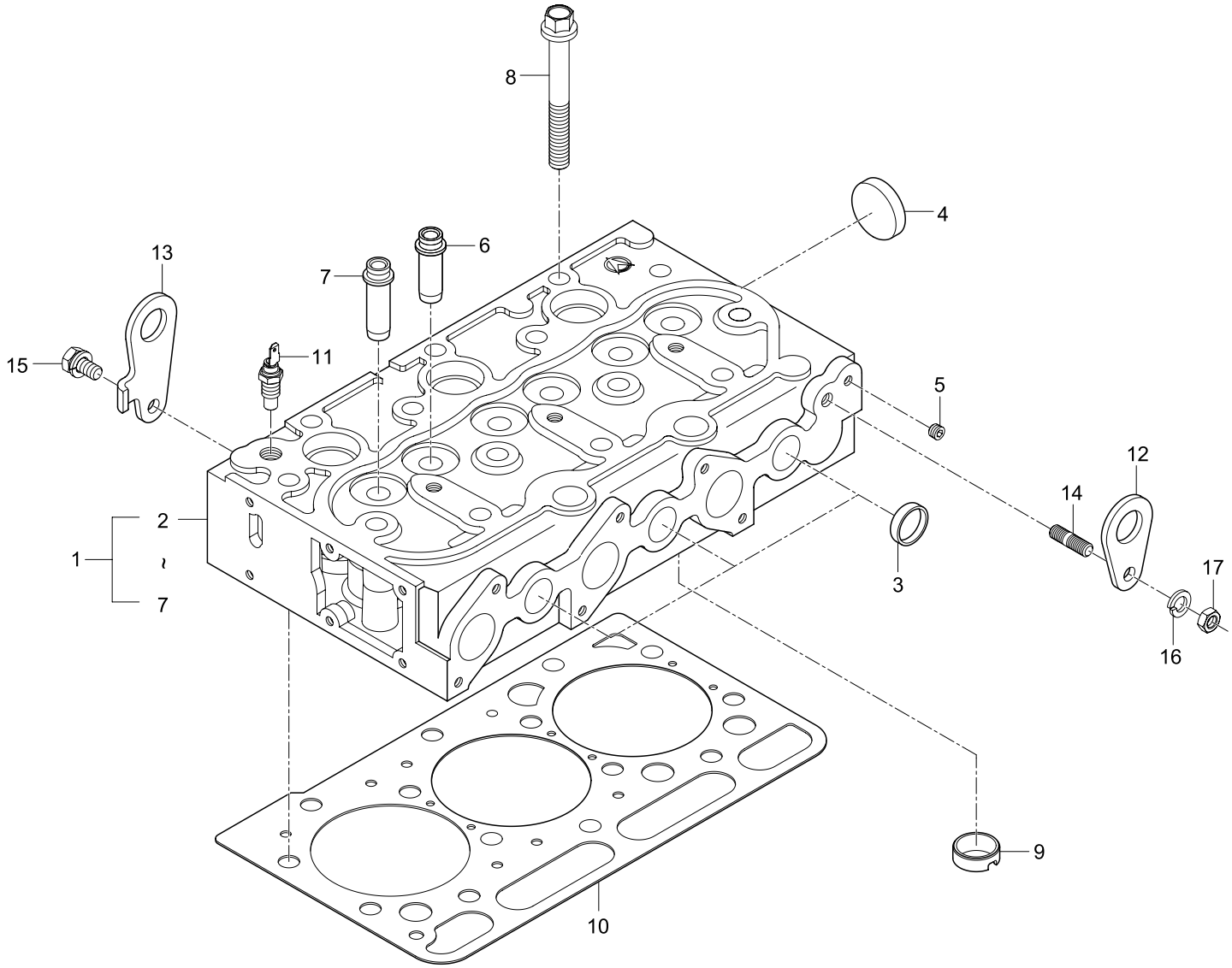

REF. NO	PART. NO	DESCRIPTION	Q'TY								I.C	REMARK
			CK20	CK20J	CK20H	CK20HJ	CK20-EU	CK20J-EU	CK20H-EU	CK20HJ-EU		
01	E5753-03045	CYLINDER HEAD ASS'Y	1	1	1	1	1	1	1	1		
01	E5753-03046	CYLINDER HEAD ASS'Y	1 ~D257-00642	1 ~D257-00642	1 ~D257-00642	1 ~D257-00642	1 ~D257-00642	1 ~D257-00642	1 ~D257-00642	1 ~D257-00642		
01	E5753-03047	CYLINDER HEAD ASS'Y	1 E257-00001~	1 E257-00001~	1 E257-00001~	1 E257-00001~	1 E257-00001~	1 E257-00001~	1 E257-00001~	1 E257-00001~		
02		HEAD, CYLINDER	1	1	1	1	1	1	1	1		Order By 1
03	E5205-03371	PLUG, SEALING	5	5	5	5	5	5	5	5		
04	15321-9626-3	PLUG, SEALING	1	1	1	1	1	1	1	1		
05	15521-9602-2	PLUG	2	2	2	2	2	2	2	2		
05	E5900-96021	PLUG	2	2	2	2	2	2	2	2		
06	E5205-13542	GUIDE, INLET VALVE	3	3	3	3	3	3	3	3		
07	E5205-13562	GUIDE, EXHAUST VALVE	3	3	3	3	3	3	3	3		
08	E5205-03452	BOLT, HEAD	14	14	14	14	14	14	14	14		
09	E5700-03144	CHAMBER, COMBUSTION	3	3	3	3	3	3	3	3		
10	E5753-03312	GASKET, CYLINDER HEAD	1 ~3257-00148	1 ~3257-00148	1 ~3257-00148	1 ~3257-00148	1 ~3257-00148	1 ~3257-00148	1 ~3257-00148	1 ~3257-00148		
10	E5753-03313	GASKET, CYLINDER HEAD	1 3257-00149~	1 3257-00149~	1 3257-00149~	1 3257-00149~	1 3257-00149~	1 3257-00149~	1 3257-00149~	1 3257-00149~		
11	E5205-32832	SWITCH, THERMOMETER	1	1	1	1	1	1	1	1		
12	15221-0175-1	HOOK, ENGINE	1	1	1	1	1	1	1	1		
13	E6305-01751	HOOK, ENGINE	1	1	1	1	1	1	1	1		
14	01513-50822	STUD	1	1	1	1	1	1	1	1		
15	01123-50816	BOLT	1	1	1	1	1	1	1	1		
16	04512-50080	WASHER, SPRING	1	1	1	1	1	1	1	1		
17	02156-50080	NUT	1	1	1	1	1	1	1	1		

E040 GEAR CASE GROUP

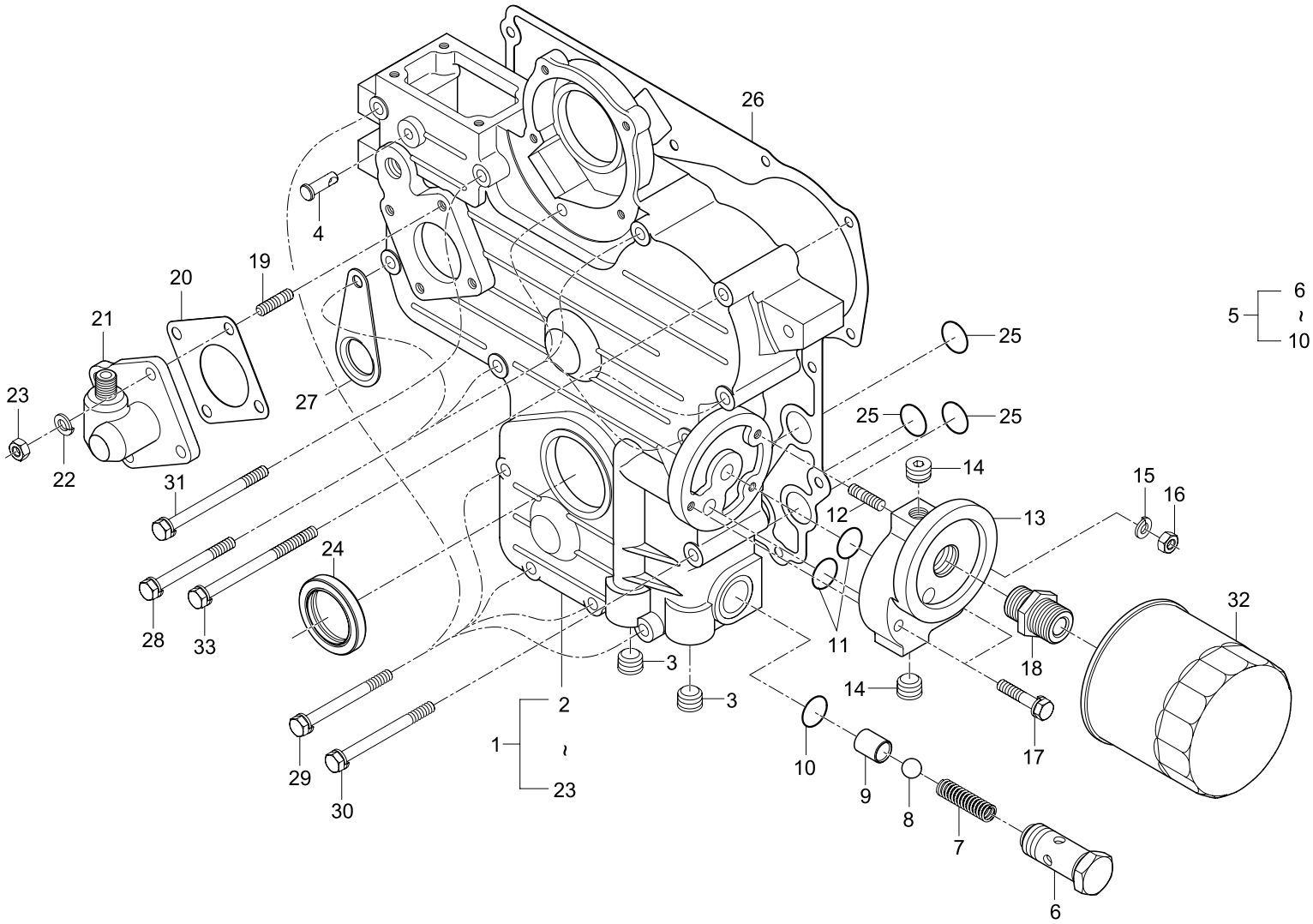

REF. NO	PART. NO	DESCRIPTION	Q'TY								I.C	REMARK
			CK20	CK20J	CK20H	CK20HJ	CK20-EU	CK20J-EU	CK20H-EU	CK20HJ-EU		
01	E5744-A0013	GEAR CASE ASS'Y	1	1	1	1	1	1	1	1		
01	E5744-A0014	GEAR CASE ASS'Y	1 ~3257-02212	1 ~3257-02212	1 ~3257-02212	1 ~3257-02212	1 ~3257-02212	1 ~3257-02212	1 ~3257-02212	1 ~3257-02212		
01	E5744-A0015	GEAR CASE ASS'Y	1 3257-02213~	1 3257-02213~	1 3257-02213~	1 3257-02213~	1 3257-02213~	1 3257-02213~	1 3257-02213~	1 3257-02213~		
01	E5744-A0017	GEAR CASE ASS'Y	1	1	1	1	1	1	1	1		
02		CASE, GEAR	1	1	1	1	1	1	1	1		Order By 1
03	15521-9603-2	PLUG	2	2	2	2	2	2	2	2		
03	E5900-96031	PLUG	2	2	2	2	2	2	2	2		
04	15221-5628-2	PIN, START SPRING	1	1	1	1	1	1	1	1		
05	E5205-36071	RELIEF VALVE ASS'Y	1	1	1	1	1	1	1	1		
06	E5205-36911	BODY, RELIEF VALVE	1	1	1	1	1	1	1	1		
07	15241-3695-2	SPRING	1	1	1	1	1	1	1	1		
08	07715-03213	BALL, STEEL	1	1	1	1	1	1	1	1		
09	E5700-36932	SEAT, VALVE	1	1	1	1	1	1	1	1		
10	04810-00150	O-RING	1	1	1	1	1	1	1	1		
11	04811-05140	O-RING	2	2	2	2	2	2	2	2		
12	15221-8821-1	STUD	1	1	1	1	1	1	1	1		
13	E5205-32312	SUPPORT, OIL FILTER	1 ~3257-02212	1 ~3257-02212	1 ~3257-02212	1 ~3257-02212	1 ~3257-02212	1 ~3257-02212	1 ~3257-02212	1 ~3257-02212		
13	E5700-32312	SUPPORT, OIL FILTER	1 3257-02213~	1 3257-02213~	1 3257-02213~	1 3257-02213~	1 3257-02213~	1 3257-02213~	1 3257-02213~	1 3257-02213~		
13	E5700-32313	SUPPORT, OIL FILTER	1	1	1	1	1	1	1	1		
14	15521-9603-2	PLUG	2	2	2	2	2	2	2	2		
14	E5900-96031	PLUG	2	2	2	2	2	2	2	2		
15	04512-50060	WASHER, SPRING	2	2	2	2	2	2	2	2		
16	02056-50060	NUT	2	2	2	2	2	2	2	2		
17	01023-50630	BOLT	2	2	2	2	2	2	2	2		
18	E5205-32291	TUBE, JOINT	1	1	1	1	1	1	1	1		

REF. NO	PART. NO	DESCRIPTION	Q'TY								I.C	REMARK
			CK20	CK20J	CK20H	CK20HJ	CK20-EU	CK20J-EU	CK20H-EU	CK20HJ-EU		
19	15221-8821-1	STUD	4	4	4	4	4	4	4	4		
20	15221-8813-1	GASKET, HOUR METER	1	1	1	1	1	1	1	1		
21	E5205-58812	HOUR METER ASS' Y	1	1	1	1	1	1	1	1		
22	04512-50060	WASHER, SPRING	4	4	4	4	4	4	4	4		
23	02056-50060	NUT	4	4	4	4	4	4	4	4		
24	09550-00008	SEAL, OIL	1	1	1	1	1	1	1	1		
25	04811-06130	O-RING	3	3	3	3	3	3	3	3		
26	E5700-04134	GASKET, GEAR CASE	1	1	1	1	1	1	1	1		
27	E5205-73142	CLAMP, TUBE	1	1	1	1	1	1	1	1		
28	01023-50660	BOLT	5	5	5	5	5	5	5	5		
29	01023-50665	BOLT	4	4	4	4	4	4	4	4		
30	01023-50670	BOLT	2	2	2	2	2	2	2	2		
31	01023-50675	BOLT	1	1	1	1	1	1	1	1		
32	E5205-32091	FILTER, OIL	1	1	1	1	1	1	1	1		
33	E5752-91031	BOLT	2	2	2	2	2	2	2	2		

E050 MAIN BEARING CASE GROUP

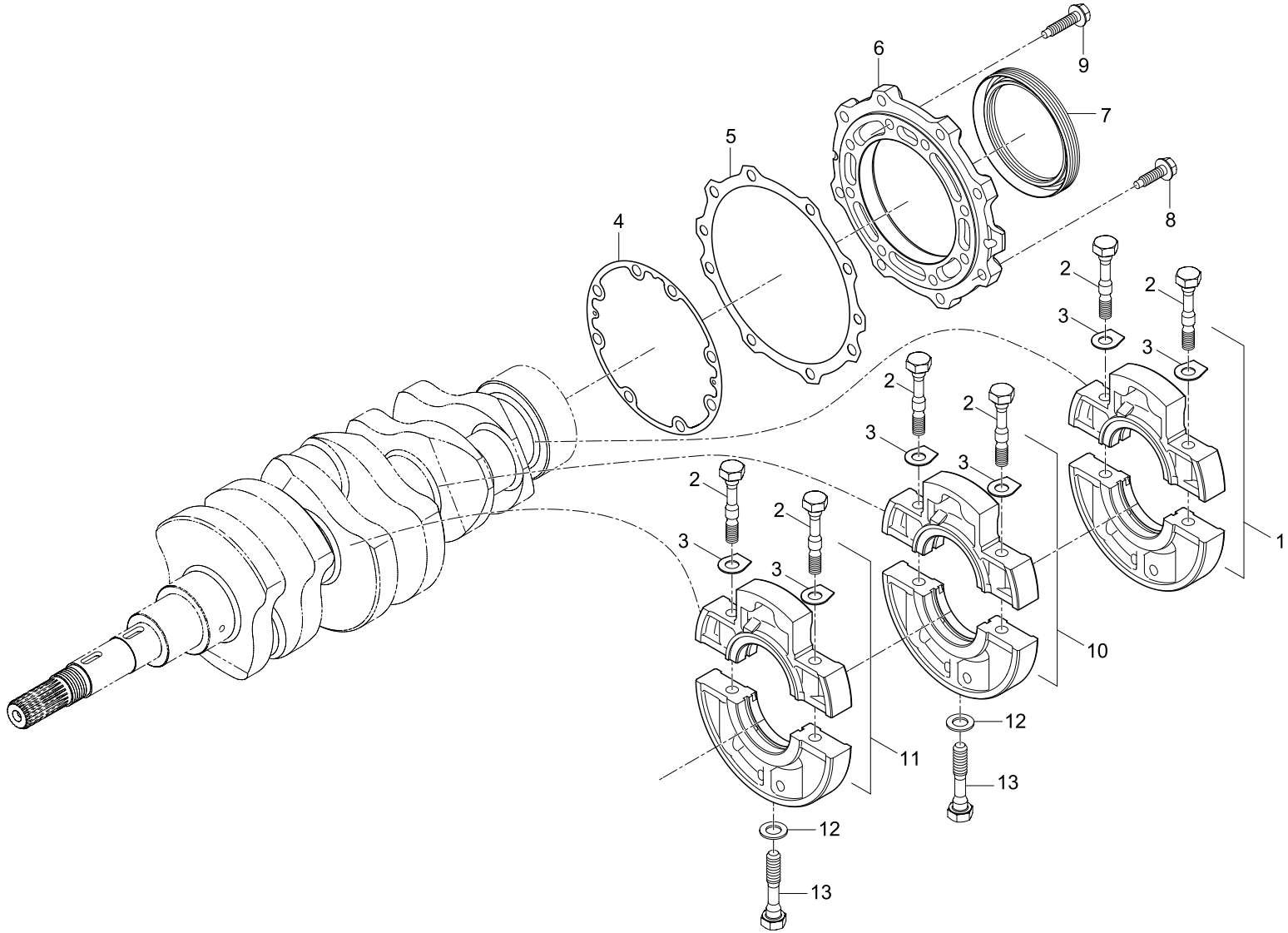

REF. NO	PART. NO	DESCRIPTION	Q'TY								I.C	REMARK
			CK20	CK20J	CK20H	CK20HJ	CK20-EU	CK20J-EU	CK20H-EU	CK20HJ-EU		
01	E5700-A0051	MAIN BEARING CASE ASS'Y	1	1	1	1	1	1	1	1		
02	E5205-04541	BOLT, BEARING CASE	6	6	6	6	6	6	6	6		
03	E5205-04573	WASHER, BEARING CASE	6	6	6	6	6	6	6	6		
04	E5700-04365	GASKET, BEARING CASE	1	1	1	1	1	1	1	1		
05	E5700-04822	GASKET, COVER	1	1	1	1	1	1	1	1		
06	E5700-04812	COVER, BEARING CASE	1	1	1	1	1	1	1	1		
07	E5700-04464	SEAL, OIL	1	1	1	1	1	1	1	1		
08	01654-50622	BOLT, FLANGE	9	9	9	9	9	9	9	9		
08	E5752-90511	BOLT, FLANGE	9	9	9	9	9	9	9	9		
09	01654-50628	BOLT, FLANGE	8	8	8	8	8	8	8	8		
09	E5752-90521	BOLT, FLANGE	8	8	8	8	8	8	8	8		
10	E5700-A0030	MAIN BEARING CASE ASS'Y 1	1	1	1	1	1	1	1	1		
11	E5700-A0040	MAIN BEARING CASE ASS'Y 2	1	1	1	1	1	1	1	1		
12	15521-9401-1	WASHER, PLAIN	2	2	2	2	2	2	2	2		
13	E5205-04561	BOLT, BEARING CASE	2	2	2	2	2	2	2	2		

E060 VALVE, ROCKER ARM GROUP (Old Revision : ~D257-00642)

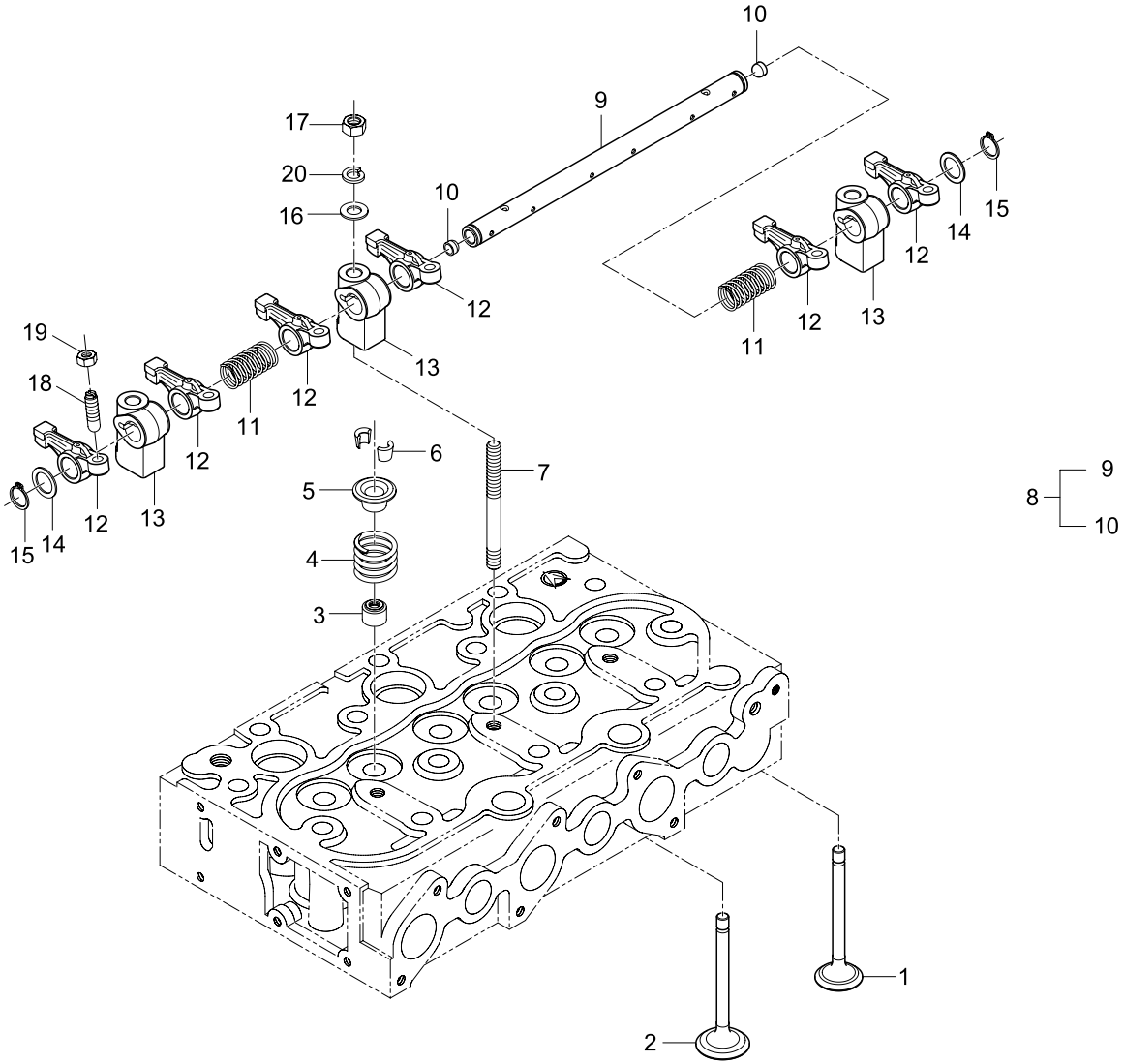

REF. NO	PART. NO	DESCRIPTION	Q'TY								I.C	REMARK
			CK20	CK20J	CK20H	CK20HJ	CK20-EU	CK20J-EU	CK20H-EU	CK20HJ-EU		
01	E5753-13111	VALVE, INLET	3	3	3	3	3	3	3	3		
02	E5753-13121	VALVE, EXHAUST	3	3	3	3	3	3	3	3		
03	E5205-13151	SEAL, VALVE STEM	6	6	6	6	6	6	6	6		
04	E5205-13241	SPRING, VALVE	6	6	6	6	6	6	6	6		
05	E5700-13332	RETAINER, VALVE SPRING	6	6	6	6	6	6	6	6		
06	E5700-13363	COLLET, VALVE SPRING	12	12	12	12	12	12	12	12		
07	E5753-91501	STUD	3	3	3	3	3	3	3	3		
08	E5753-14051	ROCKER ARM SHAFT ASS'Y	1	1	1	1	1	1	1	1		
09		SHAFT, ROCKER ARM	1	1	1	1	1	1	1	1		Order By 8
10	E5753-14421	CAP, SEALING	2	2	2	2	2	2	2	2		
11	E5753-14311	SPRING, ROCKER ARM	2	2	2	2	2	2	2	2		
12	E5753-14111	ARM, ROCKER	6	6	6	6	6	6	6	6		
13	E5753-14351	BRACKET, ROCKET ARM	3	3	3	3	3	3	3	3		
14	E5753-14431	WASHER, PLAIN	2	2	2	2	2	2	2	2		
15	04612-00130	RING, SNAP	2	2	2	2	2	2	2	2		
16	04012-50080	WASHER, PLAIN	3	3	3	3	3	3	3	3		
17	02156-50080	NUT	3	3	3	3	3	3	3	3		
18	E5700-14232	SCREW, ADJUSTING	6	6	6	6	6	6	6	6		
19	E5205-14241	NUT, ADJUSTING	6	6	6	6	6	6	6	6		
20	04512-50080	WASHER, SPRING	3	3	3	3	3	3	3	3		

E060A VALVE, ROCKER ARM GROUP (New Revision : E257-00001~)

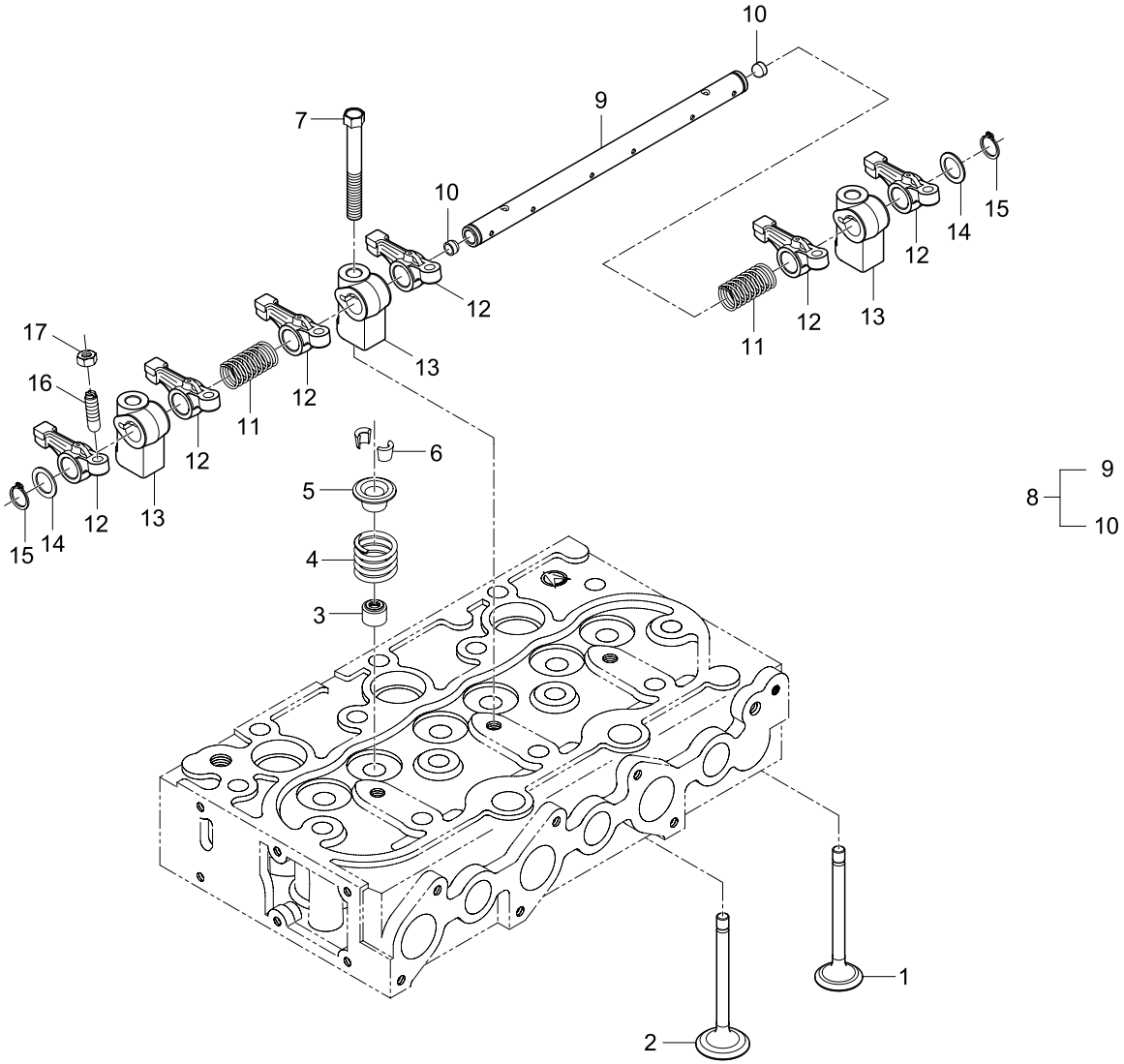

REF. NO	PART. NO	DESCRIPTION	Q'TY								I.C	REMARK
			CK20	CK20J	CK20H	CK20HJ	CK20-EU	CK20J-EU	CK20H-EU	CK20HJ-EU		
01	E5753-13111	VALVE, INLET	3	3	3	3	3	3	3	3		
02	E5753-13121	VALVE, EXHAUST	3	3	3	3	3	3	3	3		
03	E5205-13151	SEAL, VALVE STEM	6	6	6	6	6	6	6	6		
04	E5205-13241	SPRING, VALVE	6	6	6	6	6	6	6	6		
05	E5700-13332	RETAINER, VALVE SPRING	6	6	6	6	6	6	6	6		
06	E5700-13363	COLLET, VALVE SPRING	12	12	12	12	12	12	12	12		
07	E5752-91501	BOLT, ROCKER ARM SUPPORT	3	3	3	3	3	3	3	3		
08	E5753-14051	ROCKER ARM SHAFT ASS'Y	1	1	1	1	1	1	1	1		
09		SHAFT, ROCKER ARM	1	1	1	1	1	1	1	1		Order By 8
10	E5753-14421	CAP, SEALING	2	2	2	2	2	2	2	2		
11	E5753-14311	SPRING, ROCKER ARM	2	2	2	2	2	2	2	2		
12	E5753-14111	ARM, ROCKER	6	6	6	6	6	6	6	6		
13	E5753-14351	BRACKET, ROCKET ARM	3	3	3	3	3	3	3	3		
14	E5753-14431	WASHER, PLAIN	2	2	2	2	2	2	2	2		
15	04612-00130	RING, SNAP	2	2	2	2	2	2	2	2		
16	E5700-14232	SCREW, ADJUSTING	6	6	6	6	6	6	6	6		
17	E5205-14241	NUT, ADJUSTING	6	6	6	6	6	6	6	6		

E070 CYLINDER HEAD COVER GROUP (Old Revision : ~D257-00642)

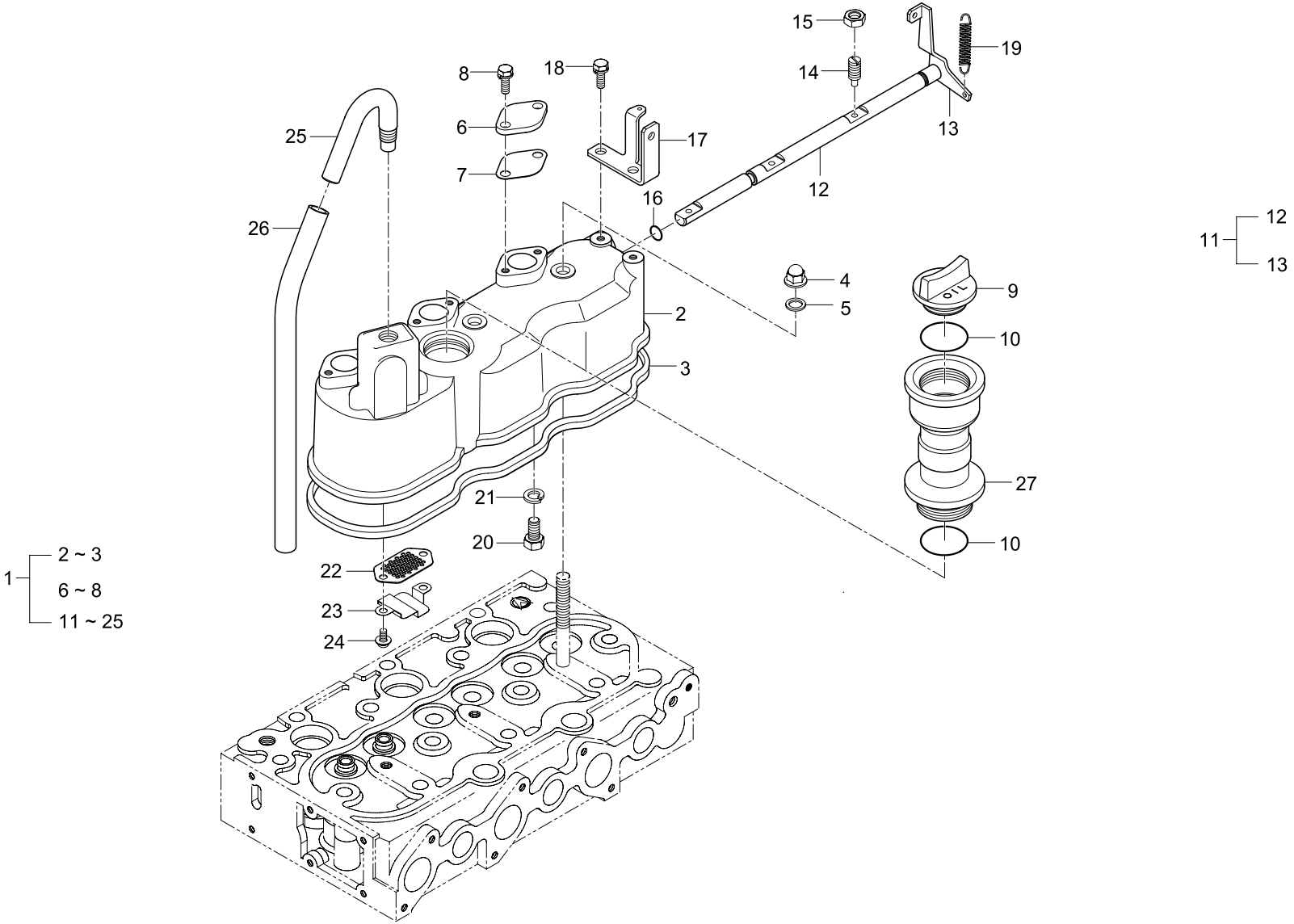

REF. NO	PART. NO	DESCRIPTION	Q'TY								I.C	REMARK
			CK20	CK20J	CK20H	CK20HJ	CK20-EU	CK20J-EU	CK20H-EU	CK20HJ-EU		
01	E5753-A0052	CYLINDER COVER ASS'Y	1	1	1	1	1	1	1	1		
02	E5753-14511	COVER, CYLINDER HEAD	1	1	1	1	1	1	1	1		
03	E5700-14522	GASKET, HEAD COVER	1	1	1	1	1	1	1	1		
04	E5500-92332	NUT, CAP	3	3	3	3	3	3	3	3		
05	15021-3366-1	GASKET	3	3	3	3	3	3	3	3		
06	E5205-66631	COVER, DECOMP HOLD	3	3	3	3	3	3	3	3		
07	15261-6664-2	GASKET, COVER	3	3	3	3	3	3	3	3		
08	01023-50614	BOLT	6	6	6	6	6	6	6	6		
09	E5500-33142	PLUG, OIL FILLER	1	1	1	1	1	1	1	1		
10	04811-50300	O-RING	2	2	2	2	2	2	2	2		
11	E5205-66042	DECOMP SHAFT ASS'Y	1	1	1	1	1	1	1	1		
12		SHAFT, DECOMP	1	1	1	1	1	1	1	1		Order By 11
13		LEVER, DECOMP SHAFT	1	1	1	1	1	1	1	1		Order By 11
14	E5205-66351	BOLT, DECOMP	3	3	3	3	3	3	3	3		
15	02056-50050	NUT	3	3	3	3	3	3	3	3		
16	04811-00080	O-RING	1	1	1	1	1	1	1	1		
17	E5205-66191	HOLDER, DECOMP WIRE	1	1	1	1	1	1	1	1		
18	01023-50614	BOLT	2	2	2	2	2	2	2	2		
19	15221-6628-3	SPRING, DECOMPRESS	1	1	1	1	1	1	1	1		
20	15221-6641-1	BOLT	1	1	1	1	1	1	1	1		
21	04512-50060	WASHER, SPRING	1	1	1	1	1	1	1	1		
22	E5205-05141	PLATE 1, ELEMENT	1	1	1	1	1	1	1	1		
23	E5205-05371	BREATHER , OIL SHIELD	1	1	1	1	1	1	1	1		
24	03027-50510	SCREW	2	2	2	2	2	2	2	2		
25	E5205-05552	BREATHER, TUBE JOINT	1	1	1	1	1	1	1	1		

REF. NO	PART. NO	DESCRIPTION	Q'TY								I.C	REMARK
			CK20	CK20J	CK20H	CK20HJ	CK20-EU	CK20J-EU	CK20H-EU	CK20HJ-EU		
26	E5205-05511	HOSE, BREATHER	1	1	1	1	1	1	1	1		
27	C7910-18213	FLANGE, OIL FILLER	1	1	1	1	1	1	1	1		

E070A CYLINDER HEAD COVER GROUP (New Revision : E257-00001~)

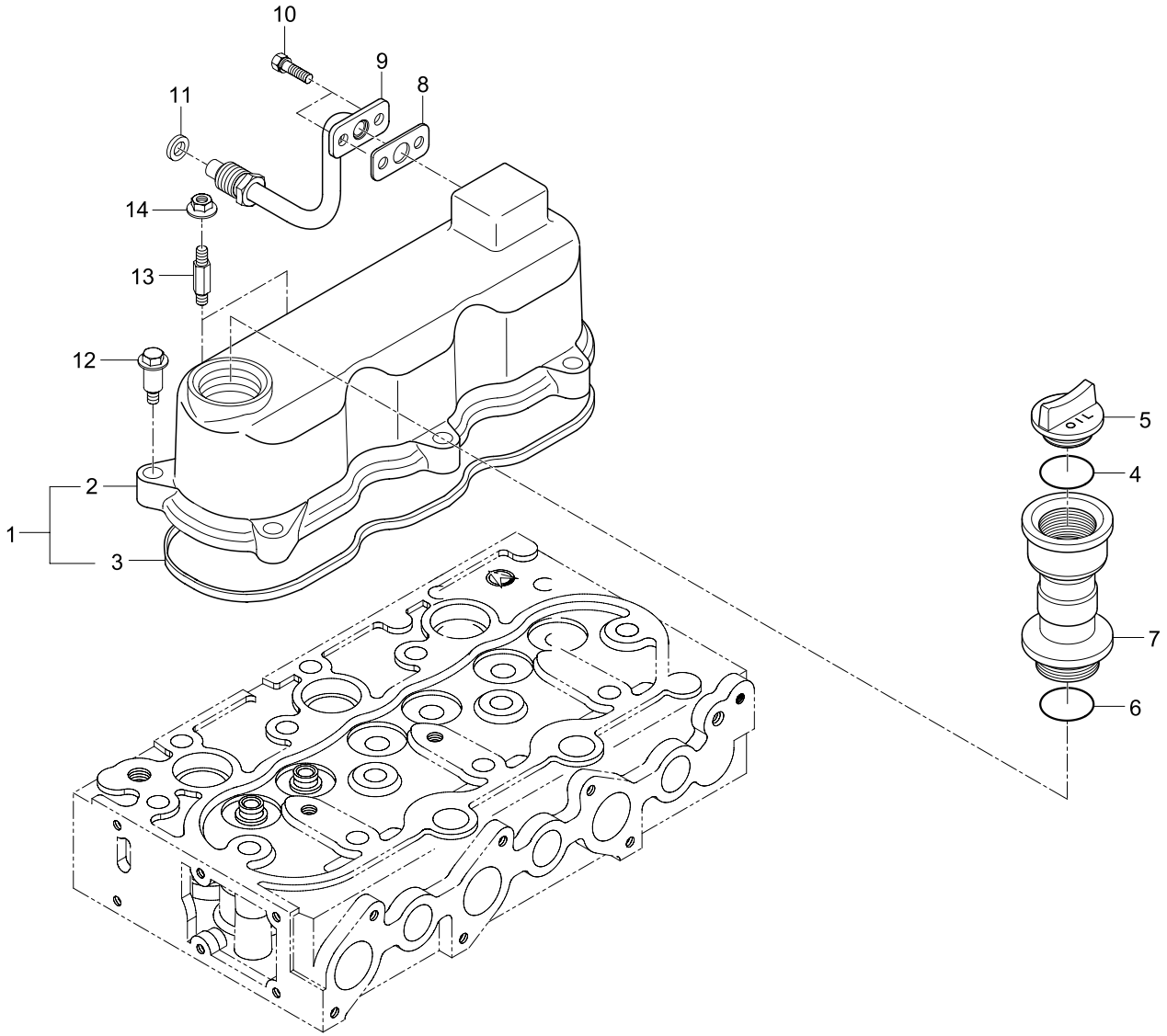

REF. NO	PART. NO	DESCRIPTION	Q'TY								I.C	REMARK
			CK20	CK20J	CK20H	CK20HJ	CK20-EU	CK20J-EU	CK20H-EU	CK20HJ-EU		
01	E5752-14502	CYLINDER HEAD COVER ASS'Y	1	1	1	1	1	1	1	1		
02	E5752-14512	COVER, CYLINDER HEAD	1	1	1	1	1	1	1	1		
03	E5752-14521	GASKET, HEAD COVER	1	1	1	1	1	1	1	1		
04	04811-50300	O-RING	1	1	1	1	1	1	1	1		
05	E5500-33142	PLUG, OIL FILLER	1	1	1	1	1	1	1	1		
06	04811-50300	O RING	1	1	1	1	1	1	1	1		
07	C7910-18213	FLANGE, OIL FILLER	1	1	1	1	1	1	1	1		
08	E5752-66641	GASKET, AIR BREATHER PIPE	1	1	1	1	1	1	1	1		
09	E5752-05511	TUBE, AIR BREATHER	1	1	1	1	1	1	1	1		
09	E5752-05512	TUBE, AIR BREATHER	1	1	1	1	1	1	1	1		
10	01023-50614	BOLT	2	2	2	2	2	2	2	2		
10	01023-50616	BOLT	2	2	2	2	2	2	2	2		
11	E7310-36431	PACKING	1	1	1	1	1	1	1	1		
12	E6510-33661	BOLT, HEAD COVER	5	5	5	5	5	5	5	5		
13	E5500-33671	STUD	2	2	2	2	2	2	2	2		
14	E5500-35681	NUT, FLANGE	2	2	2	2	2	2	2	2		

E080 CAMSHAFT GROUP

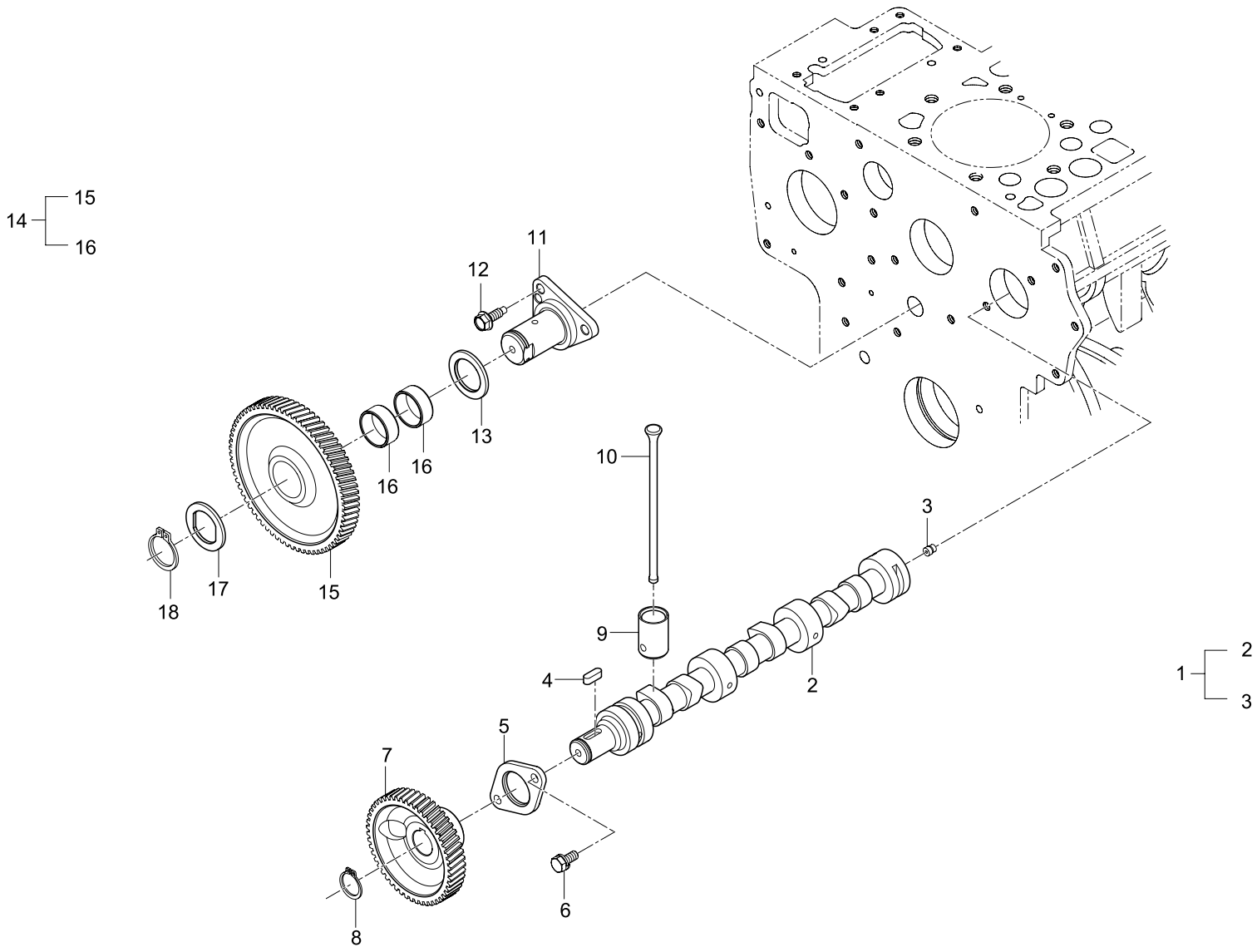

REF. NO	PART. NO	DESCRIPTION	Q'TY								I.C	REMARK
			CK20	CK20J	CK20H	CK20HJ	CK20-EU	CK20J-EU	CK20H-EU	CK20HJ-EU		
01	E5700-A0210	CAMSHAFT ASS' Y	1	1	1	1	1	1	1	1		
02		SHAFT, CAM	1	1	1	1	1	1	1	1		Order By 1
03	06350-00506	PLUG	2	2	2	2	2	2	2	2		
04	05712-00515	KEY	1	1	1	1	1	1	1	1		
05	E5205-16272	STOPPER, CAMSHAFT	1	1	1	1	1	1	1	1		
06	01023-50614	BOLT	2	2	2	2	2	2	2	2		
07	E5205-16511	GEAR, CAMSHAFT	1	1	1	1	1	1	1	1		
08	04612-00180	RING, SNAP	1	1	1	1	1	1	1	1		
09	E5700-15552	TAPPET	6	6	6	6	6	6	6	6		
10	E5205-15111	ROD, PUSH	6	6	6	6	6	6	6	6		
10	E5205-15112	ROD, PUSH	6	6	6	6	6	6	6	6		
11	E5700-24252	SHAFT, IDLE GEAR	1	1	1	1	1	1	1	1		
12	01654-50618	BOLT, FLANGE	3	3	3	3	3	3	3	3		
13	E5205-24361	COLLAR 1	1	1	1	1	1	1	1	1		
14	E5205-24012	IDLE GEAR ASS' Y	1	1	1	1	1	1	1	1		
15		GEAR, IDLE	1	1	1	1	1	1	1	1		Order By 14
16	E5205-24281	BUSHING, IDLE GEAR	2	2	2	2	2	2	2	2		
17	E5205-24371	COLLAR 2	1	1	1	1	1	1	1	1		
18	E5205-24321	RING, SNAP	1	1	1	1	1	1	1	1		

E090 PISTON, CRANKSHAFT GROUP

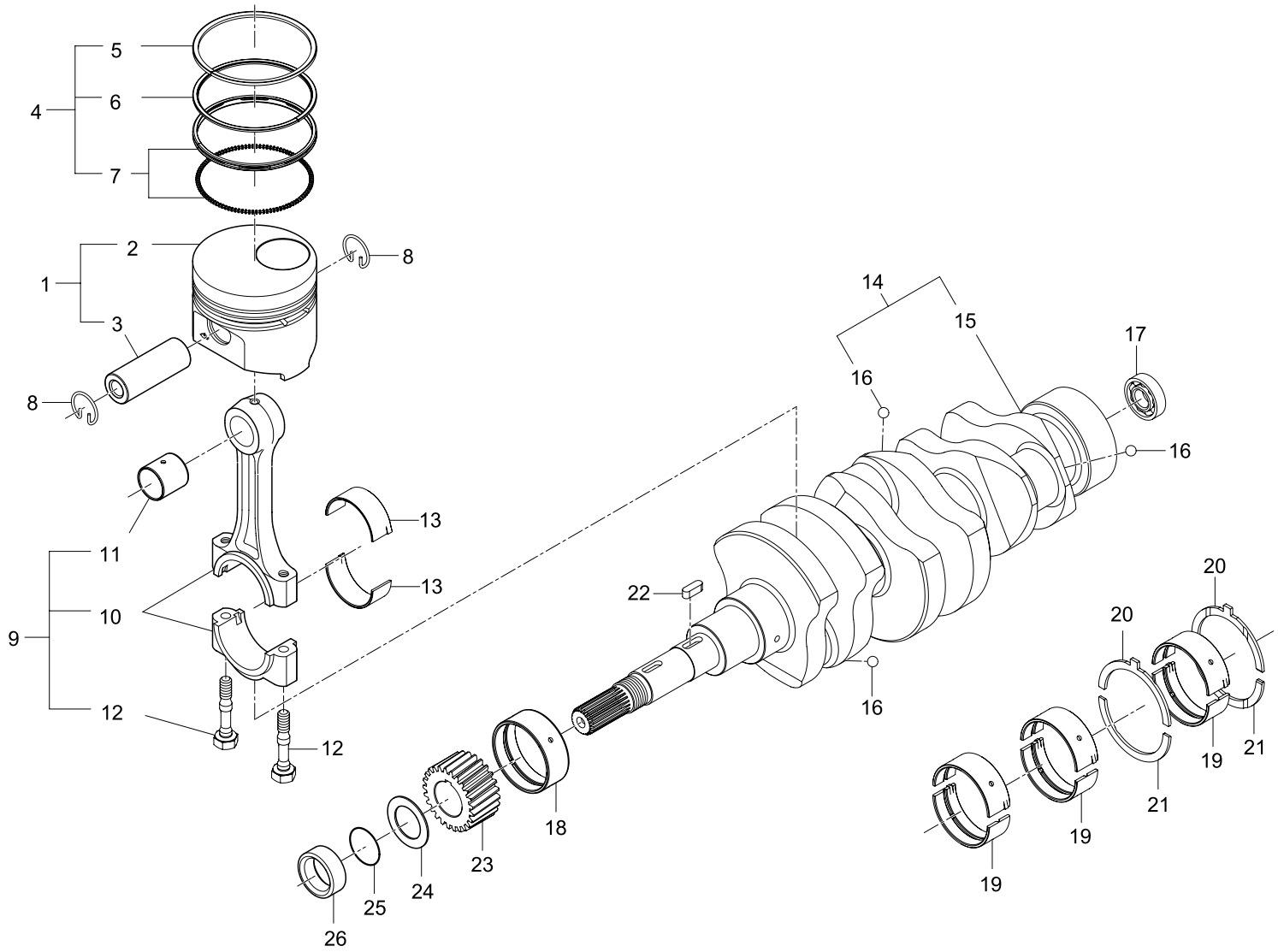

REF. NO	PART. NO	DESCRIPTION	Q'TY								I.C	REMARK
			CK20	CK20J	CK20H	CK20HJ	CK20-EU	CK20J-EU	CK20H-EU	CK20HJ-EU		
01	E5700-21015	PISTON PIN ASS'Y	3	3	3	3	3	3	3	3		
02	E5700-21118	PISTON	3	3	3	3	3	3	3	3		
03	E5205-21311	PIN, PISTON	3	3	3	3	3	3	3	3		
04	E5700-21055	PISTON RING ASS'Y	3	3	3	3	3	3	3	3		
05	E5700-21005	RING 1, PISTON	3	3	3	3	3	3	3	3		
06	E5700-21105	RING 2, PISTON	3	3	3	3	3	3	3	3		
07	E5700-21153	OIL RING ASS'Y	3	3	3	3	3	3	3	3		
08	E5205-21331	RING, SNAP	6	6	6	6	6	6	6	6		
09	E5700-22026	CONNECTING ROD ASS'Y	3	3	3	3	3	3	3	3		
10		ROD, CONNECTING	3	3	3	3	3	3	3	3		Order By 9
11	E5205-21354	BUSHING	3	3	3	3	3	3	3	3		
12	E5205-22141	BOLT, CONNECTING ROD	6	6	6	6	6	6	6	6		
13	E5205-22313	METAL, CRANK PIN	6	6	6	6	6	6	6	6		
14	E5700-A0100	CRANK SHAFT ASS'Y	1	1	1	1	1	1	1	1		
14	E5700-A0102	CRANK SHAFT ASS'Y	1	1	1	1	1	1	1	1		
15		SHAFT, CRANK	1	1	1	1	1	1	1	1		Order By 14
16	07715-00401	BALL, STEEL	3	3	3	3	3	3	3	3		
17	08121-06001	BEARING, BALL	1	1	1	1	1	1	1	1		
18	E5205-23473	METAL 1, CRANKSHAFT	1	1	1	1	1	1	1	1		
19	E5205-23483	METAL 2, CRANKSHAFT	6	6	6	6	6	6	6	6		
20	E5205-23531	METAL 1, SIDE	2	2	2	2	2	2	2	2		
21	E5205-23541	METAL 2, SIDE	2	2	2	2	2	2	2	2		
22	05712-00515	KEY	1	1	1	1	1	1	1	1		
23	E5205-24112	GEAR, CRANKSHAFT	1	1	1	1	1	1	1	1		
24	E5205-23311	SLINGER, OIL	1	1	1	1	1	1	1	1		

REF. NO	PART. NO	DESCRIPTION	Q'TY								I.C	REMARK
			CK20	CK20J	CK20H	CK20HJ	CK20-EU	CK20J-EU	CK20H-EU	CK20HJ-EU		
25	04811-10220	O-RING	1	1	1	1	1	1	1	1		
26	E5205-23251	COLLAR	1	1	1	1	1	1	1	1		
26	E5700-23252	COLLAR	1	1	1	1	1	1	1	1		

E100 FLYWHEEL GROUP

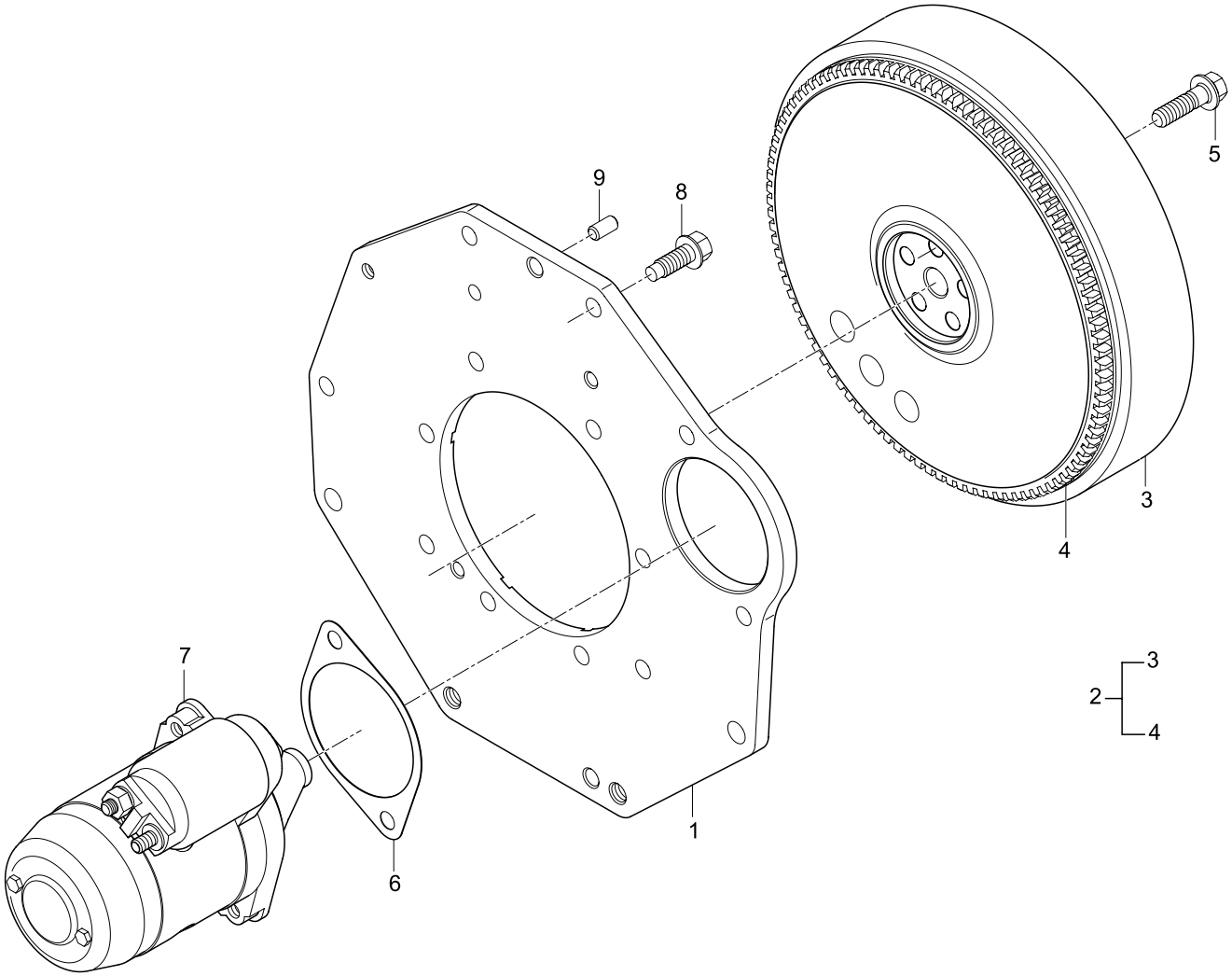

REF. NO	PART. NO	DESCRIPTION	Q'TY								I.C	REMARK
			CK20	CK20J	CK20H	CK20HJ	CK20-EU	CK20J-EU	CK20H-EU	CK20HJ-EU		
01	E5700-04612	PLATE, REAR	1	1	1	1	1	1	1	1		
01	E5700-04613	PLATE, REAR	1	1	1	1	1	1	1	1		
02	E5700-25014	FLYWHEEL ASS'Y	1	1	1	1	1	1	1	1		
03		FLYWHEEL	1	1	1	1	1	1	1	1		Order By 2
04	E5205-63821	GEAR, RING	1	1	1	1	1	1	1	1		
05	E5700-25163	BOLT, FLYWHEEL	5	5	5	5	5	5	5	5		
06	E5700-51161	GASKET	1	1	1	1	1	1	1	1		
07	E5753-63011	STARTER MOTOR ASS'Y	1	1	1	1	1	1	1	1		
07	E5753-63012	STARTER MOTOR ASS'Y	1	1	1	1	1	1	1	1		
08	01674-51028	BOLT, FLANGE	10	10	10	10	10	10	10	10		
08	E5752-91141	BOLT, FLANGE	10	10	10	10	10	10	10	10		
09	05012-00814	PIN, STRAIGHT	2	2	2	2	2	2	2	2		

E110 NOZZLE HOLDER GROUP

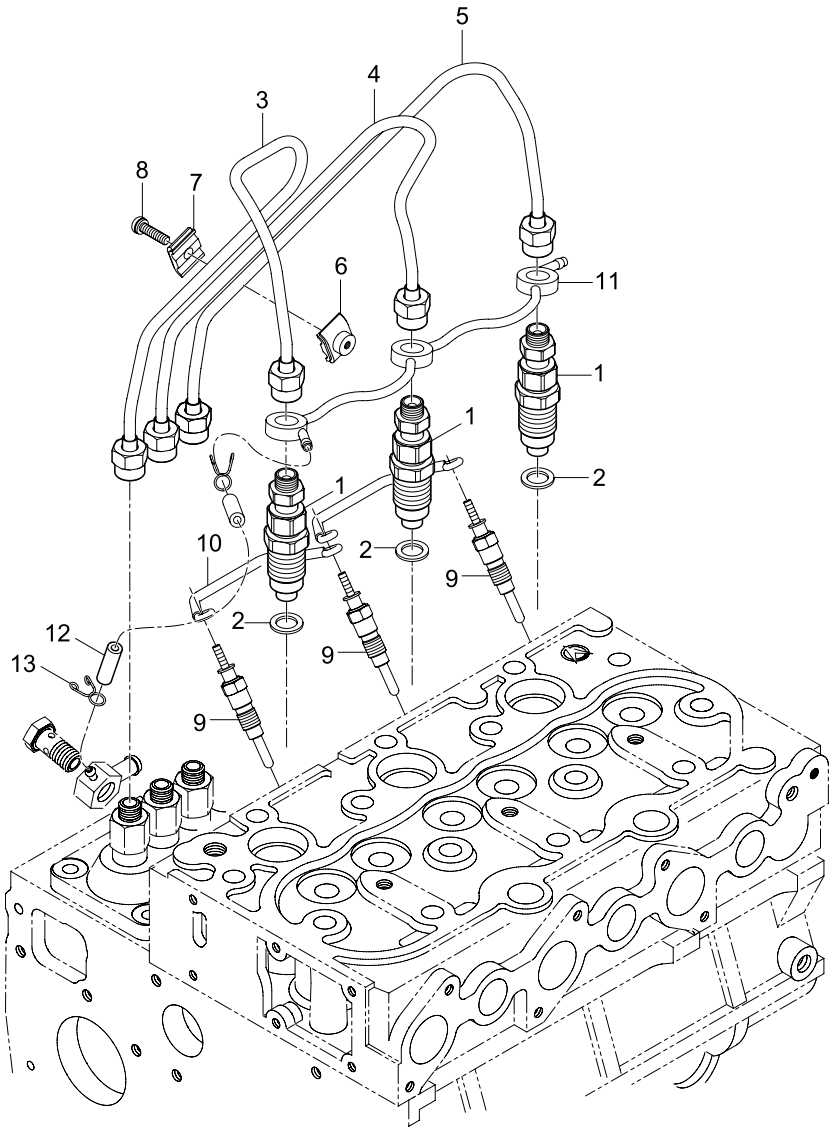

REF. NO	PART. NO	DESCRIPTION	Q'TY								I.C	REMARK
			CK20	CK20J	CK20H	CK20HJ	CK20-EU	CK20J-EU	CK20H-EU	CK20HJ-EU		
01	E5752-53001	NOZZLE HOLDER ASS'Y	3	3	3	3	3	3	3	3		
01	E5752-53002	NOZZLE HOLDER ASS'Y	3	3	3	3	3	3	3	3		
01	E5752-53003	NOZZLE HOLDER ASS'Y	3	3	3	3	3	3	3	3		
02	17011-5362-1	GASKET	3	3	3	3	3	3	3	3		
03	E5700-53714	TUBE 1, INJECTION	1	1	1	1	1	1	1	1		
04	E5700-53724	TUBE 2, INJECTION	1	1	1	1	1	1	1	1		
05	E5700-53734	TUBE 3, INJECTION	1	1	1	1	1	1	1	1		
06	15121-5385-2	CLAMP 1, TUBE	2	2	2	2	2	2	2	2		
07	T4815-67371	CLAMP, TUBE	2	2	2	2	2	2	2	2		
08	03024-50520	SCREW	2	2	2	2	2	2	2	2		
09	E5205-65511	PLUG, GLOW	3	3	3	3	3	3	3	3		
09	E5205-65512	PLUG, GLOW	3	3	3	3	3	3	3	3		
10	E5205-65561	CORD, GLOW PLUG	2	2	2	2	2	2	2	2		
11	E5753-42505	OVER FLOW TUBE ASS'Y	1	1	1	1	1	1	1	1		
11	E5753-42506	OVER FLOW TUBE ASS'Y	1	1	1	1	1	1	1	1		
12	09661-40160	TUBE, FUEL	1	1	1	1	1	1	1	1		
13	14971-4275-1	CLAMP, TUBE	2	2	2	2	2	2	2	2		

E120 FUEL CAM SHAFT GROUP

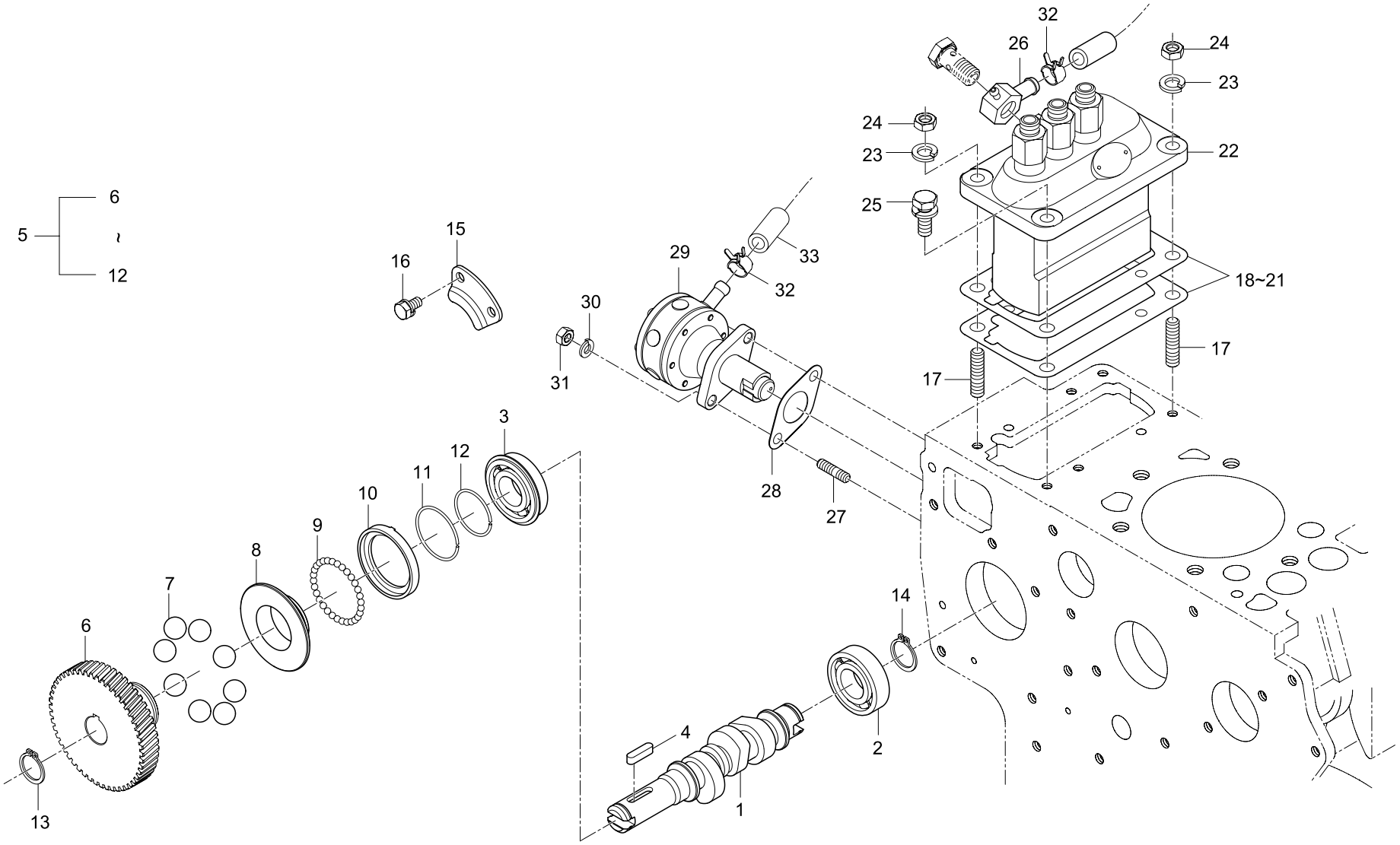

REF. NO	PART. NO	DESCRIPTION	Q'TY								I.C	REMARK
			CK20	CK20J	CK20H	CK20HJ	CK20-EU	CK20J-EU	CK20H-EU	CK20HJ-EU		
01	E5752-16171	SHAFT, FUEL CAM	1	1	1	1	1	1	1	1		
01	E5752-16172	SHAFT, FUEL CAM	1	1	1	1	1	1	1	1		
02	08103-06004	BEARING, BALL	1	1	1	1	1	1	1	1		
03	08153-06004	BEARING, BALL	1	1	1	1	1	1	1	1		
04	05712-00520	KEY, FEATHER	1	1	1	1	1	1	1	1		
05	E5700-A0021	GOVERNOR SLEEVE ASS'Y	1	1	1	1	1	1	1	1		
06		GEAR, INJECTION PUMP	1	1	1	1	1	1	1	1		Order By 5
07		BALL, STEEL	8	8	8	8	8	8	8	8		Order By 5
08		SLEEVE, GOVERNOR	1	1	1	1	1	1	1	1		Order By 5
09		BALL, STEEL	30	30	30	30	30	30	30	30		Order By 5
10		CASE, GOVERN BALL	1	1	1	1	1	1	1	1		Order By 5
11		SNAP RING, BALL CASE	1	1	1	1	1	1	1	1		Order By 5
12	E5205-55471	RING, SNAP	1	1	1	1	1	1	1	1		
13	04612-00180	RING, SNAP	1	1	1	1	1	1	1	1		
14	04612-00190	RING, SNAP	1	1	1	1	1	1	1	1		
15	E5205-16321	STOPPER, FUEL CAMSHAFT	1	1	1	1	1	1	1	1		
16	01023-50612	BOLT	2	2	2	2	2	2	2	2		
17	01513-50822	STUD	2	2	2	2	2	2	2	2		
18	E5500-52112	SHIM (t 0.15)	1	1	1	1	1	1	1	1		
19	E5500-52122	SHIM (t 0.3)	1	1	1	1	1	1	1	1		
20	15321-5215-1	SHIM (t 0.9)	1	1	1	1	1	1	1	1		
20	15321-5216-1	SHIM (t 1.0)	1	1	1	1	1	1	1	1		
21	E5800-52111	SHIM	1	1	1	1	1	1	1	1		
22	E5700-51012	INJECTION PUMP ASS'Y	1	1	1	1	1	1	1	1		
23	04512-50080	WASHER, SPRING	2	2	2	2	2	2	2	2		

REF. NO	PART. NO	DESCRIPTION	Q'TY								I.C	REMARK
			CK20	CK20J	CK20H	CK20HJ	CK20-EU	CK20J-EU	CK20H-EU	CK20HJ-EU		
24	02156-50080	NUT	2	2	2	2	2	2	2	2		
25	01123-50822	BOLT	2	2	2	2	2	2	2	2		
26	E6500-42412	JOINT, FUEL TUBE	1	1	1	1	1	1	1	1		
27	01513-50616	STUD	2	2	2	2	2	2	2	2		
27	01513-50618	STUD	2	2	2	2	2	2	2	2		
28	15241-5214-1	GASKET	1	1	1	1	1	1	1	1		
29	15381-5203-0	FUEL PUMP ASS' Y	1	1	1	1	1	1	1	1		
30	04512-50060	WASHER, SPRING	2	2	2	2	2	2	2	2		
31	02056-50060	NUT	2	2	2	2	2	2	2	2		
32	14911-4275-1	CLIP, HOSE	2	2	2	2	2	2	2	2		
33	15471-4211-1	HOSE, FUEL	1	1	1	1	1	1	1	1		
33	T2305-35512	HOSE, FUEL	1	1	1	1	1	1	1	1		

E130 SPEED CONTROL LEVER GROUP

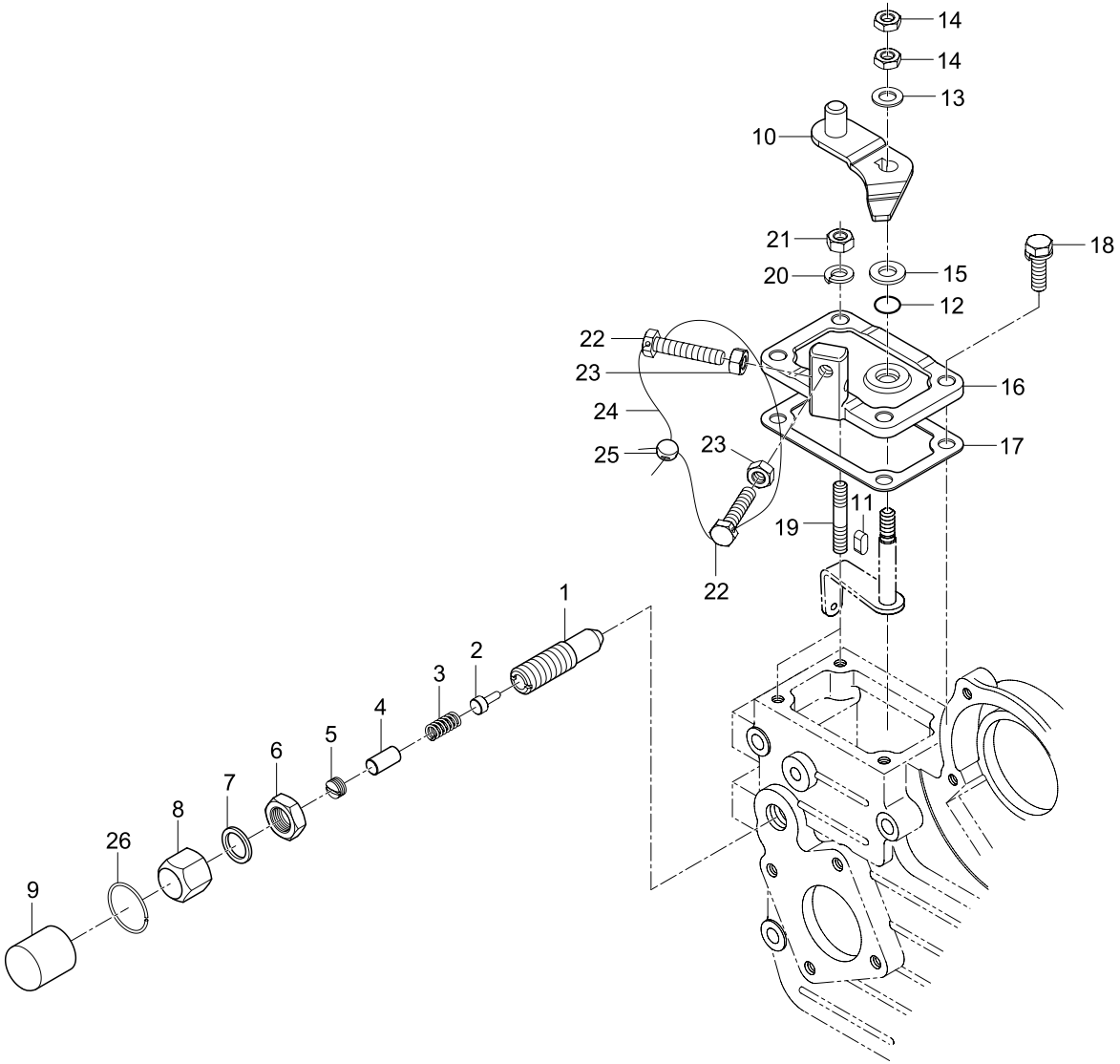

REF. NO	PART. NO	DESCRIPTION	Q'TY								I.C	REMARK
			CK20	CK20J	CK20H	CK20HJ	CK20-EU	CK20J-EU	CK20H-EU	CK20HJ-EU		
01	E5205-54133	BODY, FUEL ADJUSTING	1	1	1	1	1	1	1	1		
02	E5700-54173	PIN, FUEL ADJUSTING	1	1	1	1	1	1	1	1	◄	
			~3257-00958	~3257-00958	~3257-00958	~3257-00958	~3257-00958	~3257-00958	~3257-00958	~3257-00958	✕	
02	E5700-54174	PIN, FUEL ADJUSTING	1	1	1	1	1	1	1	1	◄	
			3257-00959~	3257-00959~	3257-00959~	3257-00959~	3257-00959~	3257-00959~	3257-00959~	3257-00959~		
03	E5700-54232	SPRING, FUEL ADJUSTING	1	1	1	1	1	1	1	1		
04	15221-5419-2	SPACER	1	1	1	1	1	1	1	1		
05	14301-5443-1	SCREW, SET	1	1	1	1	1	1	1	1		
06	E5205-54372	NUT, LOCK	1	1	1	1					◄	
											✕	
06	E5753-54371	NUT, LOCK	1	1	1	1	1	1	1	1	◄	
			3257-00001~	3257-00001~	3257-00001~	3257-00001~	3257-00001~	3257-00001~	3257-00001~	3257-00001~		
07	E5205-33671	GASKET	2	2	2	2	2	2	2	2		
08	E5205-54222	NUT, CAP	1	1	1	1					◄	
											✕	
08	E5753-54221	NUT, CAP	1	1	1	1	1	1	1	1	◄	
			3257-00001~	3257-00001~	3257-00001~	3257-00001~	3257-00001~	3257-00001~	3257-00001~	3257-00001~		
09	14301-5442-1	CAP	1	1	1	1					◄	
											✕	
09	E5753-54421	CAP	1	1	1	1	1	1	1	1	◄	
			3257-00001~	3257-00001~	3257-00001~	3257-00001~						
10	E5752-57152	LEVER, SPEED CONTROL	1	1	1	1	1	1	1	1		
11	05712-00410	KEY	1	1	1	1	1	1	1	1		
12	04811-00070	O-RING	1	1	1	1	1	1	1	1		
13	04013-50060	WASHER, PLAIN	1	1	1	1	1	1	1	1		
14	02012-50060	NUT	2	2	2	2	2	2	2	2		
15	E5205-94011	WASHER, PLAIN	1	1	1	1	1	1	1	1		
16	E5205-57112	PLATE, SPEED CONTROL	1	1	1	1	1	1	1	1		
17	15261-5721-1	GASKET	1	1	1	1	1	1	1	1	◄	
17	E5700-57211	GASKET	1	1	1	1	1	1	1	1	◄	
18	01023-50620	BOLT	2	2	2	2	2	2	2	2		
19	01518-00620	STUD	1	1	1	1					◄	
			~3257-00004	~3257-00004	~3257-00004	~3257-00004					✕	
19	01518-50622	STUD	2	2	2	2	2	2	2	2	◄	
			3257-00005~	3257-00005~	3257-00005~	3257-00005~						

REF. NO	PART. NO	DESCRIPTION	Q'TY								I.C	REMARK
			CK20	CK20J	CK20H	CK20HJ	CK20-EU	CK20J-EU	CK20H-EU	CK20HJ-EU		
20	04512-50060	WASHER, SPRING	2	2	2	2	2	2	2	2		
21	02056-50060	NUT	2	2	2	2	2	2	2	2		
22	15108-5728-4	STOPPER	2	2	2	2	2	2	2	2		
23	02056-50060	NUT	2	2	2	2	2	2	2	2		
24	07811-11210	WIRE	1	1	1	1	1	1	1	1		
25	07918-00001	LEAD, SEALING	1	1	1	1	1	1	1	1		
26	E5753-54281	RING, SNAP	1	1	1	1	1	1	1	1		

E140 ENGINE STOP LEVER GROUP

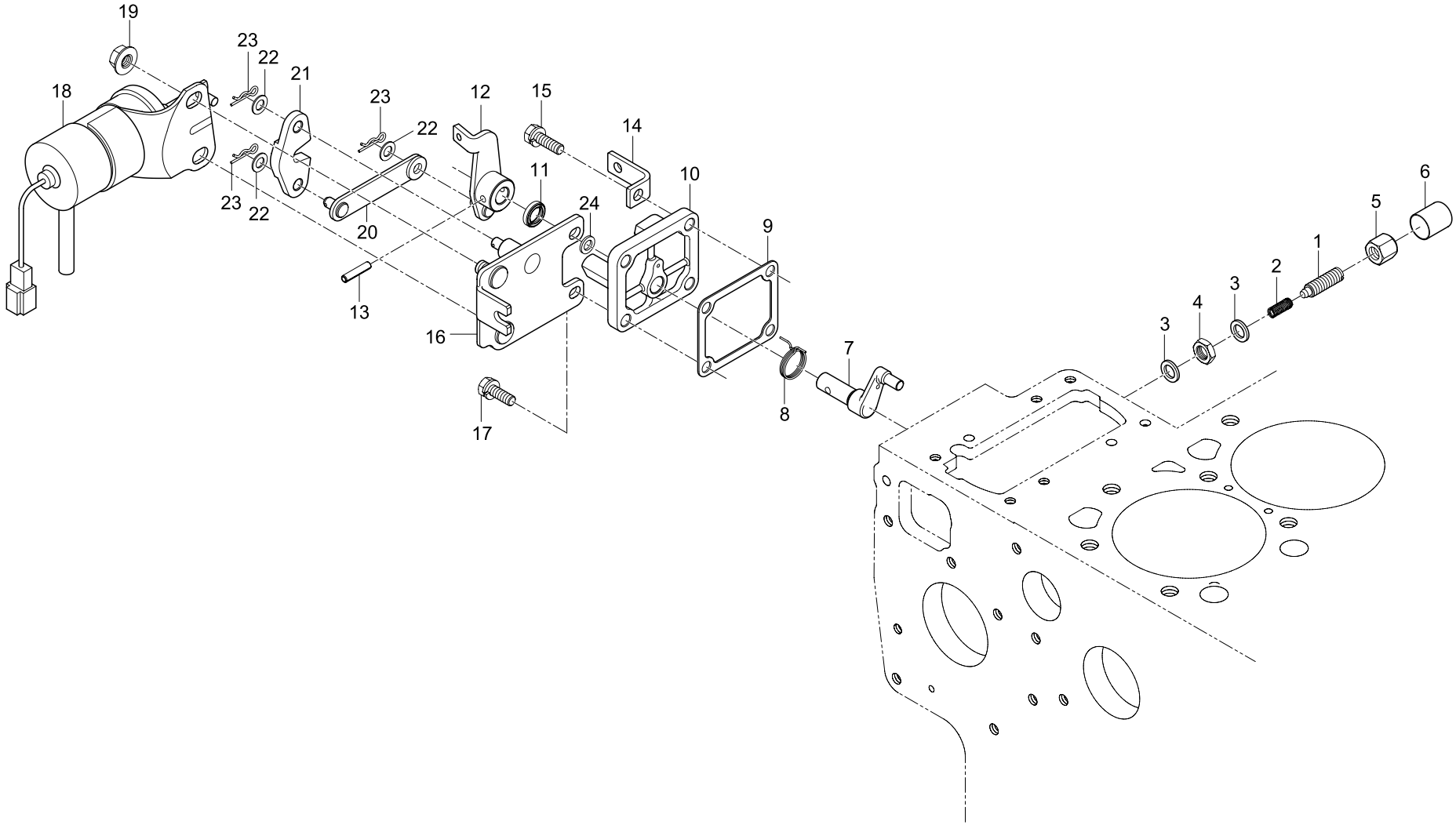

REF. NO	PART. NO	DESCRIPTION	Q'TY								I.C	REMARK
			CK20	CK20J	CK20H	CK20HJ	CK20-EU	CK20J-EU	CK20H-EU	CK20HJ-EU		
01	E5205-54252	BOLT, ADJUSTING	1	1	1	1	1	1	1	1		
02	E5205-54261	SPRING	1	1	1	1	1	1	1	1		
03	15021-3366-1	GASKET	2	2	2	2	2	2	2	2		
04	E5205-92021	NUT	1	1	1	1	1	1	1	1		
05	15521-9233-1	NUT, CAP	1	1	1	1	1	1	1	1		
06	15521-5427-1	CAP	1	1	1	1	1	1	1	1		
07	E5700-57723	SHAFT, LEVER	1	1	1	1	1	1	1	1		
08	E6200-57922	SPRING	1	1	1	1	1	1	1	1		
09	E5700-05131	GASKET	1	1	1	1	1	1	1	1		
10	E5700-51654	COVER, INJECTION PUMP	1	1	1	1	1	1	1	1		
11	15471-5798-1	SEAL, OIL	1	1	1	1	1	1	1	1		
12	E5205-57732	LEVER, ENGINE STOP	1	1	1	1	1	1	1	1		
13	05411-00420	PIN, SPRING	1	1	1	1	1	1	1	1		
14	E5205-57482	HOLDER, WIRE	1	1	1	1	1	1	1	1		
15	01023-50620	BOLT	1	1	1	1	1	1	1	1		
16	E5743-60111	SUPPORT, SOLENOID	1	1	1	1	1	1	1	1		
17	01023-50618	BOLT	3	3	3	3	3	3	3	3		
18	E5753-60013	SOLENOID, ENGINE STOP	1	1	1	1	1	1	1	1		
18	E5753-60014	SOLENOID, ENGINE STOP	1	1	1	1	1	1	1	1		
18	E5753-60015	SOLENOID, ENGINE STOP	1	1	1	1	1	1	1	1		
19	02751-50080	NUT, FLANGE	2	2	2	2	2	2	2	2		
20	E5205-32641	LEVER 1, STOP	1	1	1	1	1	1	1	1		
21	15471-6016-2	LEVER 2, STOP	1	1	1	1	1	1	1	1		
22	04012-50060	WASHER, PLAIN	3	3	3	3	3	3	3	3		
23	05525-50600	PIN, SNAP	3	3	3	3	3	3	3	3		

REF. NO	PART. NO	DESCRIPTION	Q'TY								I.C	REMARK
			CK20	CK20J	CK20H	CK20HJ	CK20-EU	CK20J-EU	CK20H-EU	CK20HJ-EU		
24	04012-50060	WASHER, PLAIN	1	1	1	1	1	1	1	1		

E150 GOVERNOR GROUP

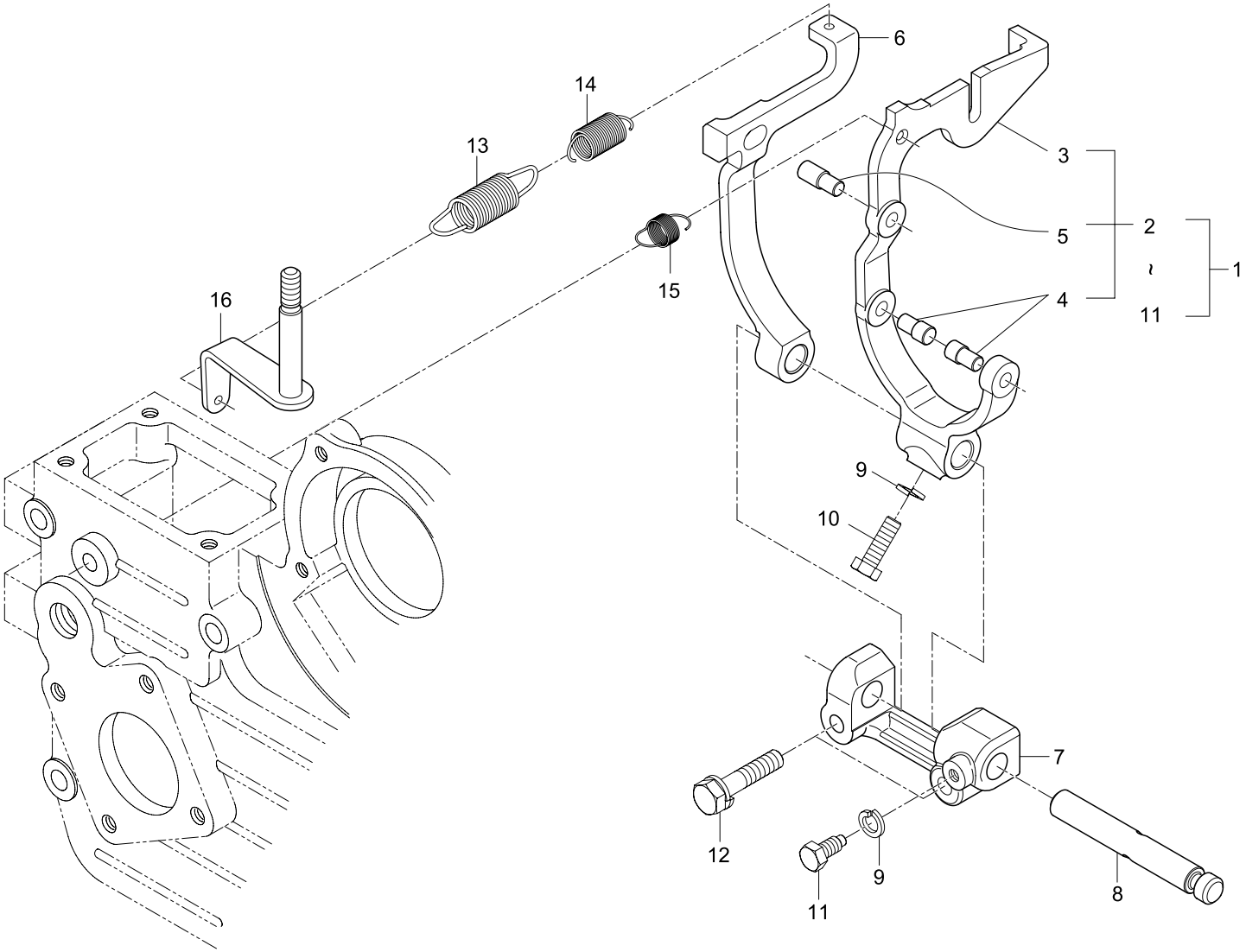

REF. NO	PART. NO	DESCRIPTION	Q'TY								I.C	REMARK
			CK20	CK20J	CK20H	CK20HJ	CK20-EU	CK20J-EU	CK20H-EU	CK20HJ-EU		
01	E5700-56052	FORK LEVER ASS' Y	1	1	1	1	1	1	1	1		
01	E5700-56053	FORK LEVER ASS' Y	1	1	1	1	1	1	1	1		
02		FORK LEVER 1 ASS' Y	1	1	1	1	1	1	1	1		Order By 1
03		LEVER 1, FORK	1	1	1	1	1	1	1	1		Order By 1
04		PIN 1, FORK LEVER	2	2	2	2	2	2	2	2		Order By 1
05		PIN 2, FORK LEVER	1	1	1	1	1	1	1	1		Order By 1
06		LEVER 2, FORK	1	1	1	1	1	1	1	1		Order By 1
07		HOLDER, FORK LEVER	1	1	1	1	1	1	1	1		Order By 1
08		SHAFT, FORK LEVER	1	1	1	1	1	1	1	1		Order By 1
09		WASHER, SPRING	2	2	2	2	2	2	2	2		Order By 1
10		BOLT	1	1	1	1	1	1	1	1		Order By 1
11		BOLT	1	1	1	1	1	1	1	1		Order By 1
12	01023-50628	BOLT	2	2	2	2	2	2	2	2		
13	E5700-56413	SPRING 1, GOVERNOR	1	1	1	1	1	1	1	1		
14	E5700-56421	SPRING 2, GOVERNOR	1	1	1	1	1	1	1	1		
14	15521-5642-1	SPRING 2, GOVERNOR	1	1	1	1	1	1	1	1		
15	15221-5648-2	SPRING, START	1	1	1	1	1	1	1	1		
15	E5753-56482	SPRING, START	1	1	1	1	1	1	1	1		
16	E5205-56022	GOVERNOR LEVER ASS' Y	1	1	1	1	1	1	1	1		

E160 WATER PUMP GROUP

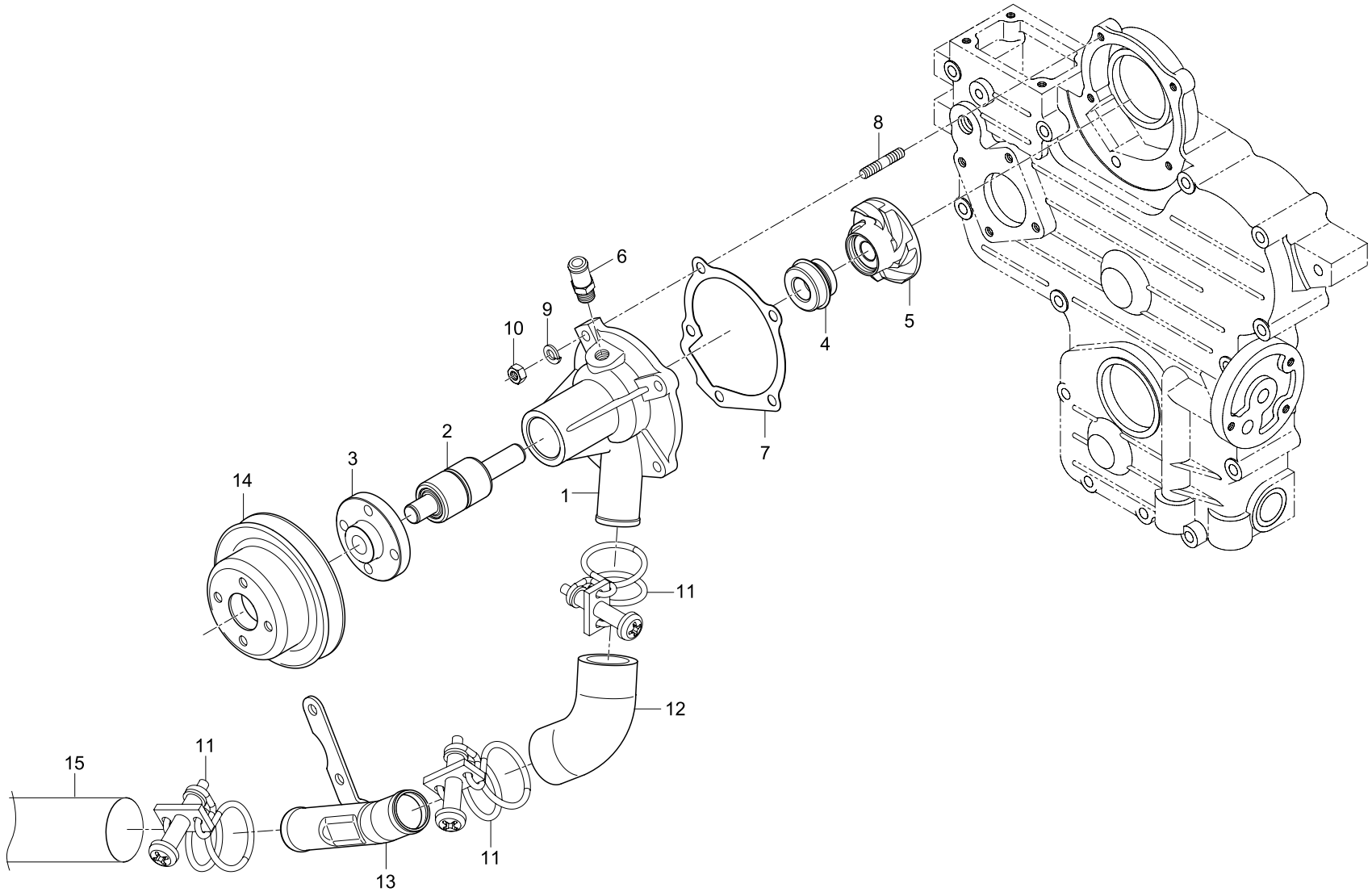

REF. NO	PART. NO	DESCRIPTION	Q'TY								I.C	REMARK
			CK20	CK20J	CK20H	CK20HJ	CK20-EU	CK20J-EU	CK20H-EU	CK20HJ-EU		
01	E5700-73042	BODY, WATER PUMP	1	1	1	1	1	1	1	1		
02	E5205-73551	BEARING, WATER PUMP	1	1	1	1	1	1	1	1		
03	E5205-73523	FLANGE	1	1	1	1	1	1	1	1		
04	E5800-73052	SEAL, SET	1	1	1	1	1	1	1	1		
05	E5700-73512	IMPELLER	1	1	1	1	1	1	1	1		
06	E5700-73342	TUBE, WATER RETURN	1	1	1	1	1	1	1	1		
07	15531-7343-0	GASKET, WATER PUMP	1	1	1	1	1	1	1	1		
08	01518-50620	STUD	4	4	4	4	4	4	4	4		
09	04512-50060	WASHER, SPRING	4	4	4	4	4	4	4	4		
10	02056-50060	NUT	4	4	4	4	4	4	4	4		
11	31355-3819-1	BAND, HOSE	3	3	3	3	3	3	3	3		
11	E5752-18171	CLAMP, HOSE	3	3	3	3	3	3	3	3		
12	E5205-72951	HOSE 3, WATER	1	1	1	1	1	1	1	1		
13	E5205-72873	HOSE, WATER	1	1	1	1	1	1	1	1		
14	E5752-74251	PULLEY, FAN	1	1	1	1	1	1	1	1		
15	E5205-72943	HOSE 2, WATER	1	1	1	1	1	1	1	1		

E170 WATER PIPE GROUP

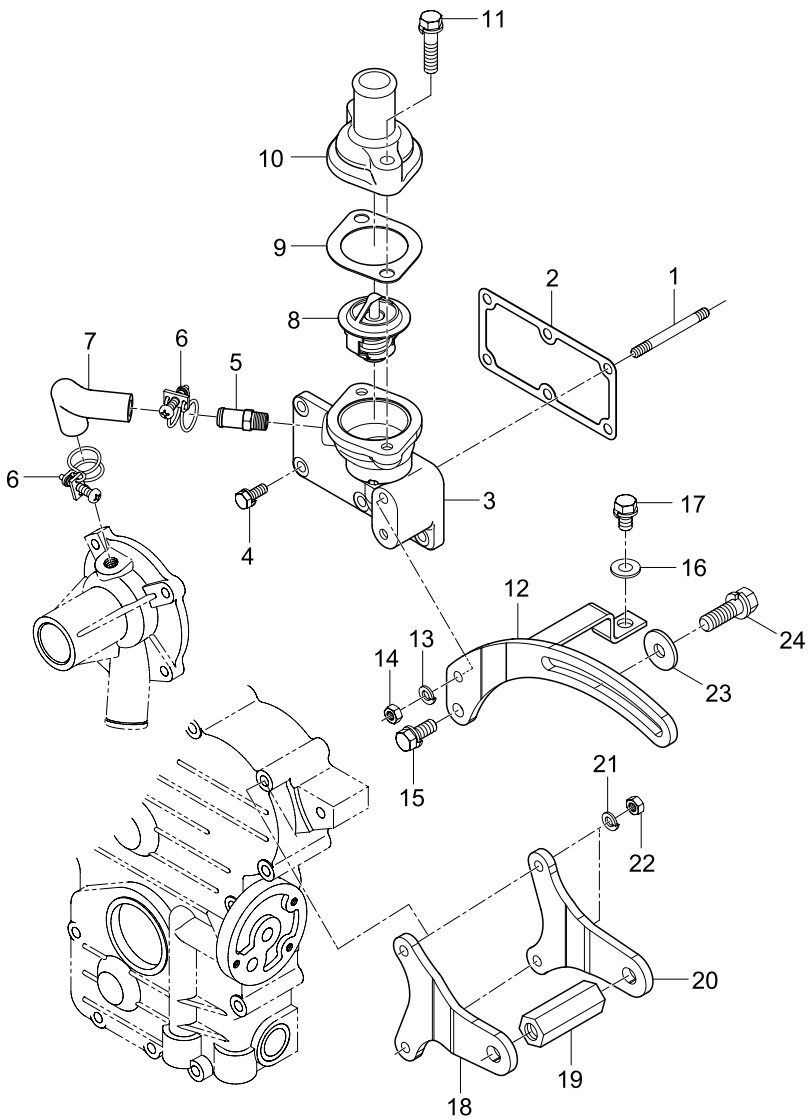

REF. NO	PART. NO	DESCRIPTION	Q'TY								I.C	REMARK
			CK20	CK20J	CK20H	CK20HJ	CK20-EU	CK20J-EU	CK20H-EU	CK20HJ-EU		
01	01513-50655	STUD	1	1	1	1	1	1	1	1		
02	E5700-72921	GASKET, WATER FLANGE	1	1	1	1	1	1	1	1		
03	E5700-72914	FLANGE, WATER	1	1	1	1	1	1	1	1		
04	01023-50616	BOLT	5	5	5	5	5	5	5	5		
05	E5700-73342	HOSE, WATER RETURN	1	1	1	1	1	1	1	1		
06	E5205-73361	BAND, TUBE	2	2	2	2	2	2	2	2		
07	E5700-73352	HOSE, WATER PUMP	1	1	1	1	1	1	1	1		
08	E5500-73012	THERMOSTAT ASS' Y	1	1	1	1	1	1	1	1		
09	15321-7327-1	GASKET	1	1	1	1	1	1	1	1		
10	E5700-73262	COVER, THERMOSTAT	1	1	1	1	1	1	1	1		
11	01123-50835	BOLT	2	2	2	2	2	2	2	2		
12	E5752-64421	STAY 1, DANAMO	1	1	1	1	1	1	1	1		
13	04512-50060	WASHER, SPRING	1	1	1	1	1	1	1	1		
14	02056-50060	NUT	1	1	1	1	1	1	1	1		
15	01123-50820	BOLT	1	1	1	1	1	1	1	1		
16	04013-50080	WASHER, PLAIN	1	1	1	1	1	1	1	1		
17	01123-50814	BOLT	1	1	1	1	1	1	1	1		
18	E5752-64431	STAY 2, DANAMO	1	1	1	1	1	1	1	1		
19	E5752-64452	COLLAR	1	1	1	1	1	1	1	1		
20	E5752-64441	STAY 3, DANAMO	1	1	1	1	1	1	1	1		
21	04512-50060	WASHER, SPRING	2	2	2	2	2	2	2	2		
22	02056-50060	NUT	2	2	2	2	2	2	2	2		
23	04015-50080	WASHER, PLAIN	1	1	1	1	1	1	1	1		
24	01123-50832	BOLT	1	1	1	1	1	1	1	1		

E180 DYNAMO GROUP

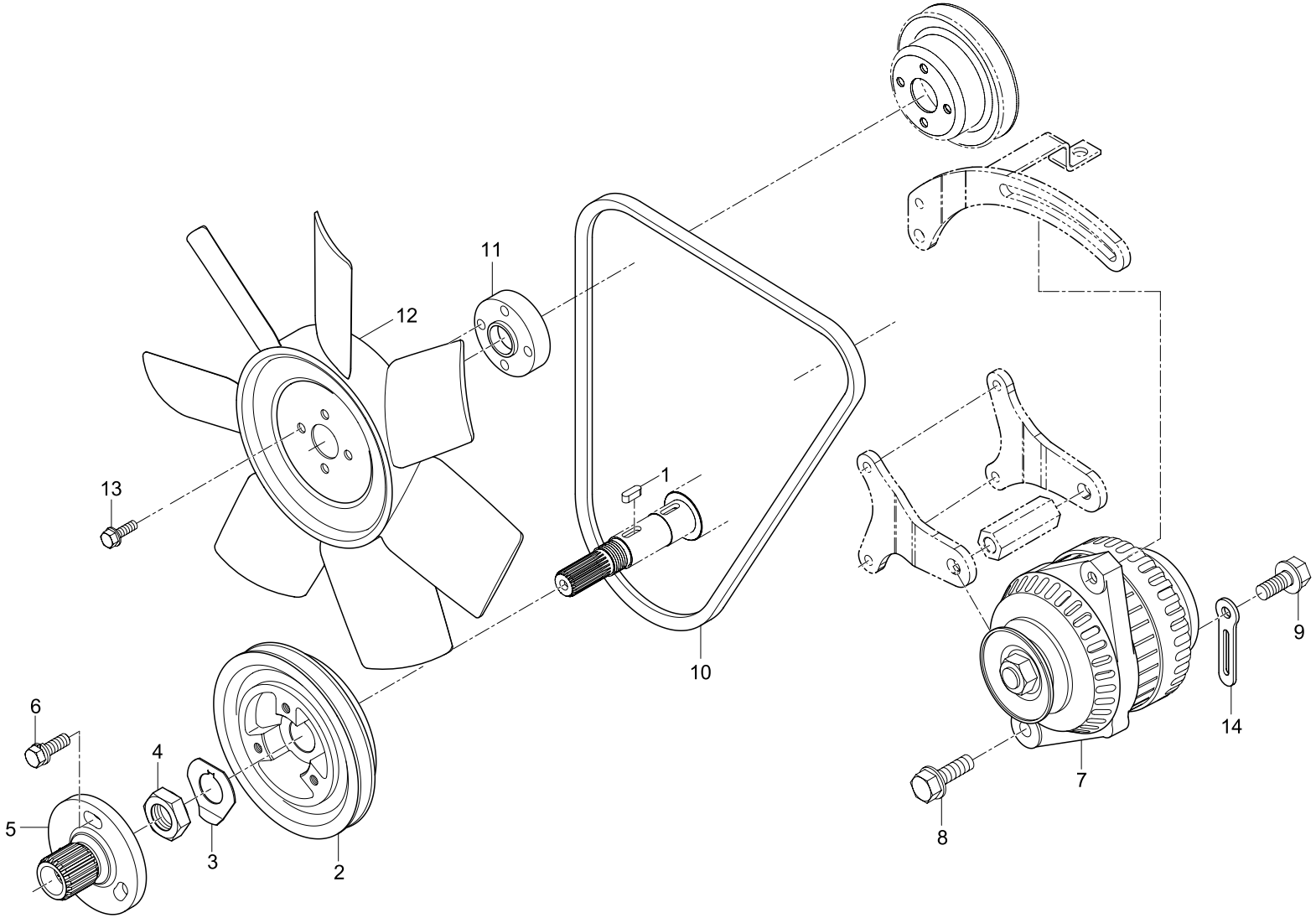

REF. NO	PART. NO	DESCRIPTION	Q'TY								I.C	REMARK
			CK20	CK20J	CK20H	CK20HJ	CK20-EU	CK20J-EU	CK20H-EU	CK20HJ-EU		
01	05712-00515	KEY	1	1	1	1	1	1	1	1		
02	E5205-74281	PULLEY, FAN DRIVING	1	1	1	1	1	1	1	1		
03	E5205-23381	WASHER, CRANKSHAFT	1	1	1	1	1	1	1	1		
04	E5205-23361	NUT, CRANKSHAFT	1	1	1	1	1	1	1	1		
05	E5205-88532	FLANGE, PTO	1	1	1	1	1	1	1	1		
06	01123-50825	BOLT	3	3	3	3	3	3	3	3		
07	E5753-64011	DYNAMO ASS'Y	1	1	1	1	1	1	1	1		
07	E6213-64012	DYNAMO ASS'Y	1	1	1	1	1	1	1	1		
08	01774-51045	BOLT, FLANGE	1	1	1	1	1	1	1	1		
09	01774-51035	BOLT, FLANGE	1	1	1	1	1	1	1	1		
10	E5752-72531	BELT, FAN	1	1	1	1	1	1	1	1		
10	E5752-72532	BELT, FAN	1	1	1	1	1	1	1	1		
10	E5752-72533	BELT, FAN	1	1	1	1	1	1	1	1		
11	E5752-74121	COLLAR, FAN	1	1	1	1	1	1	1	1		
12	E5205-74113	FAN, COOLING	1	1	1	1	1	1	1	1		
13	01754-50625	BOLT, FLANGE	4	4	4	4	4	4	4	4		
14	37155-3447-1	CLAMP, HARNESS	1	1	1	1	1	1	1	1		

E190 MANIFOLD GROUP

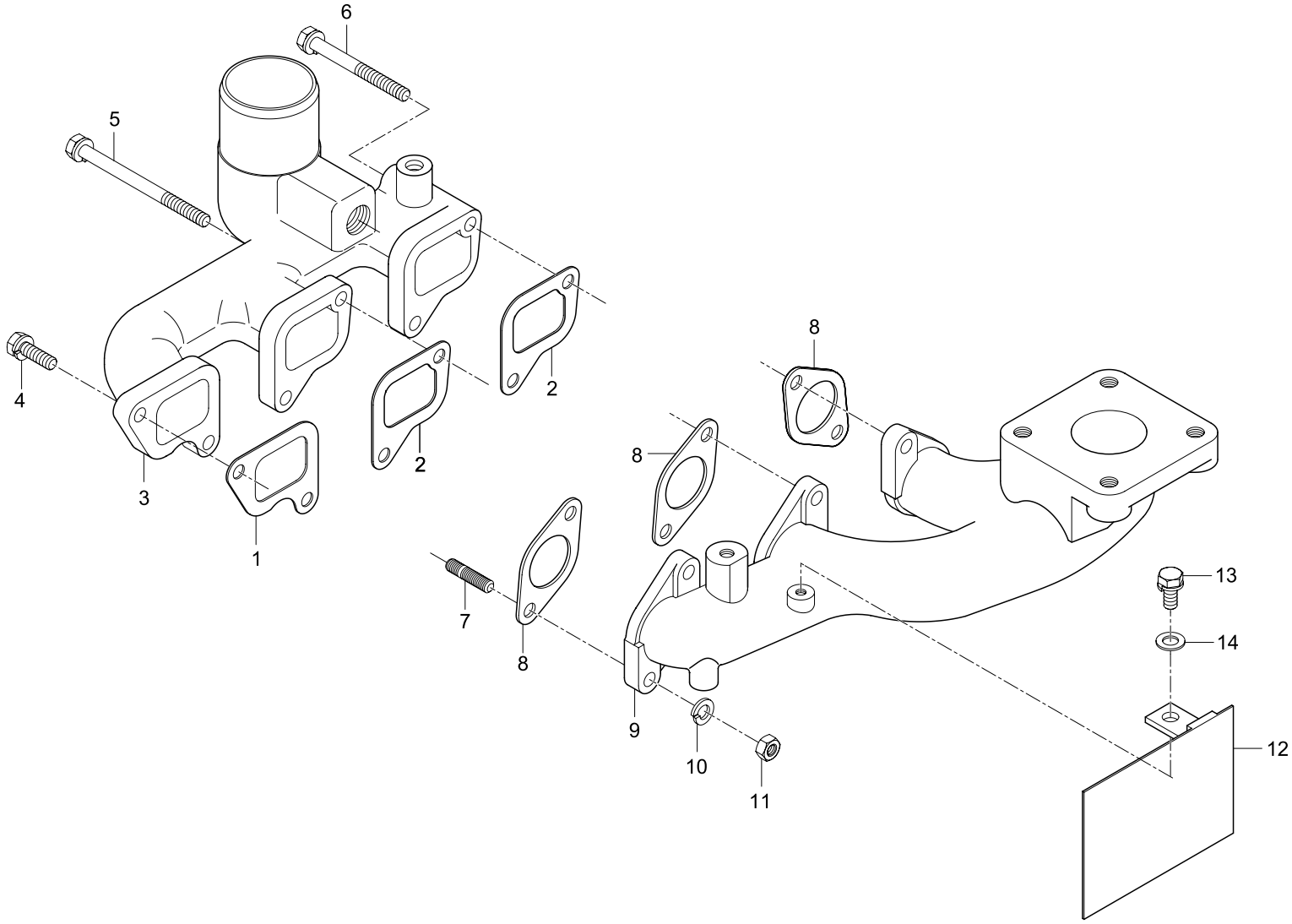

REF. NO	PART. NO	DESCRIPTION	Q'TY								I.C	REMARK
			CK20	CK20J	CK20H	CK20HJ	CK20-EU	CK20J-EU	CK20H-EU	CK20HJ-EU		
01	15261-1182-1	GASKET 1	1	1	1	1	1	1	1	1		
01	E5700-11821	GASKET 1	1	1	1	1	1	1	1	1		
02	15261-1183-1	GASKET 2	2	2	2	2	2	2	2	2		
02	E5700-11831	GASKET 2	2	2	2	2	2	2	2	2		
03	E5205-11762	MANIFOLD, INTAKE	1 ~D257-00521	1 ~D257-00521	1 ~D257-00521	1 ~D257-00521	1 ~D257-00521	1 ~D257-00521	1 ~D257-00521	1 ~D257-00521		
03	E5700-11763	MANIFOLD, INTAKE	1 E257-00001~	1 E257-00001~	1 E257-00001~	1 E257-00001~	1 E257-00001~	1 E257-00001~	1 E257-00001~	1 E257-00001~		
03	E5700-11764	MANIFOLD, INTAKE	1	1	1	1	1	1	1	1		
04	01023-50620	BOLT	4	4	4	4	4	4	4	4		
05	01023-50680	BOLT	1	1	1	1	1	1	1	1		
06	01023-50660	BOLT	1	1	1	1	1	1	1	1		
07	01513-50620	STUD	6	6	6	6	6	6	6	6		
08	E5700-12361	GASKET, EXHAUST MANIFOLD	3	3	3	3	3	3	3	3		
09	E5752-12311	MANIFOLD, EXHAUST	1	1	1	1	1	1	1	1		
09	E5752-12312	MANIFOLD, EXHAUST	1	1	1	1	1	1	1	1		
10	04512-50060	WASHER, SPRING	6	6	6	6	6	6	6	6		
11	02056-50060	NUT	6	6	6	6	6	6	6	6		
12	E5752-12211	COVER, EXHAUST MANIFOLD	1	1	1	1	1	1	1	1		
13	01023-50610	BOLT	2	2	2	2	2	2	2	2		
14	04013-50060	WASHER, PLAIN	2	2	2	2	2	2	2	2		

T010 AIRCLEANER GROUP

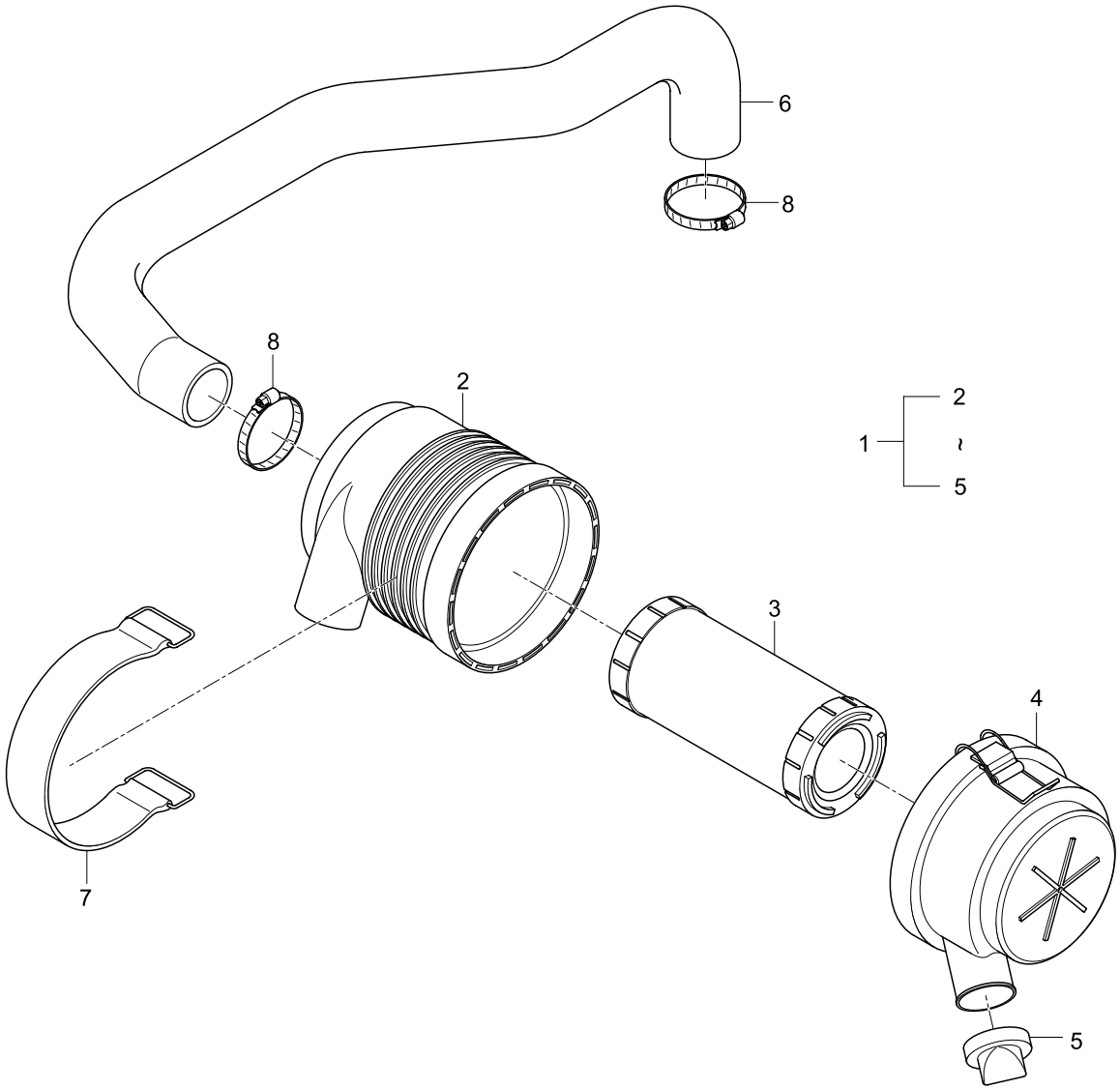

REF. NO	PART. NO	DESCRIPTION	Q'TY								I.C	REMARK
			CK20	CK20J	CK20H	CK20HJ	CK20-EU	CK20J-EU	CK20H-EU	CK20HJ-EU		
01	T2350-11611	AIRCLEANER ASS'Y	1	1	1	1	1	1	1	1		
02	T2350-11631	BODY, AIRCLEANER	1	1	1	1	1	1	1	1		
03	T2350-11641	ELEMENT, AIRCLEANER	1	1	1	1	1	1	1	1		
04	T2350-11651	COVER, AIRCLEANER	1	1	1	1	1	1	1	1		
05	T2350-11661	CAP, RUBBER	1	1	1	1	1	1	1	1		
06	T2350-11622	HOSE, INLET	1	1	1	1	1	1	1	1		
			~3193-00010	~D194-00150	~3195-00120	~D196-00200	~E050-00071	~E050-00071	~E051-00055	~E051-00055		
06	T2350-11623	HOSE, INLET	1	1	1	1	1	1	1	1		
			E193-00001~	E194-00001~	E195-00001~	~D050-00126	E050-00072~	E050-00072~	E051-00056~	E051-00056~		
07	T2350-11721	BAND, AIRCLEANER	1	1	1	1	1	1	1	1		
08	15221-1172-2	BAND	2	2	2	2	2	2	2	2		

T020 MUFFLER GROUP

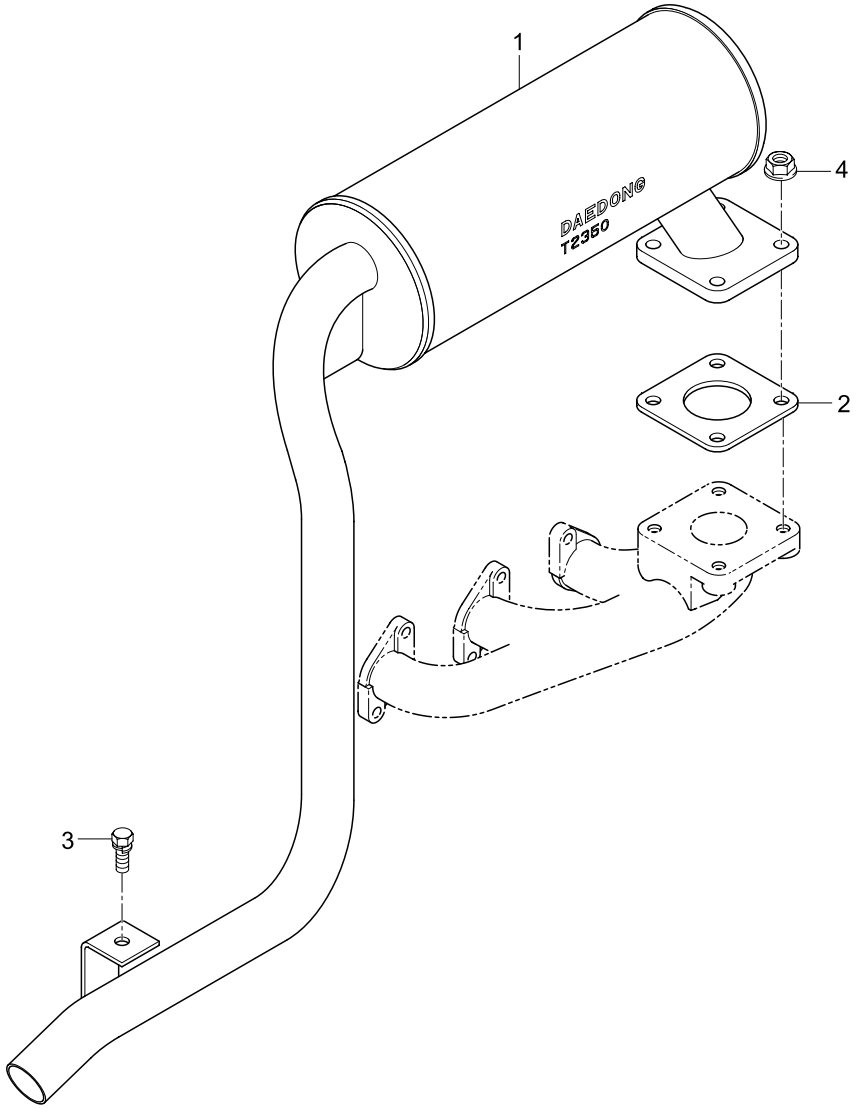

REF. NO	PART. NO	DESCRIPTION	Q'TY								I.C	REMARK
			CK20	CK20J	CK20H	CK20HJ	CK20-EU	CK20J-EU	CK20H-EU	CK20HJ-EU		
01	T2350-12113	MUFFLER	1	1	1	1	1	1	1	1		
02	15371-1237-1	GASKET	1	1	1	1	1	1	1	1		Wrong Number
02	15371-1237-0	GASKET	1	1	1	1	1	1	1	1		
03	01125-50820	BOLT	1	1	1	1	1	1	1	1		
04	01123-50820	BOLT	4	4	4	4	4	4	4	4		Wrong Number
04	02751-50080	NUT, FLANGE	4	4	4	4	4	4	4	4		

T030 RADIATOR GROUP

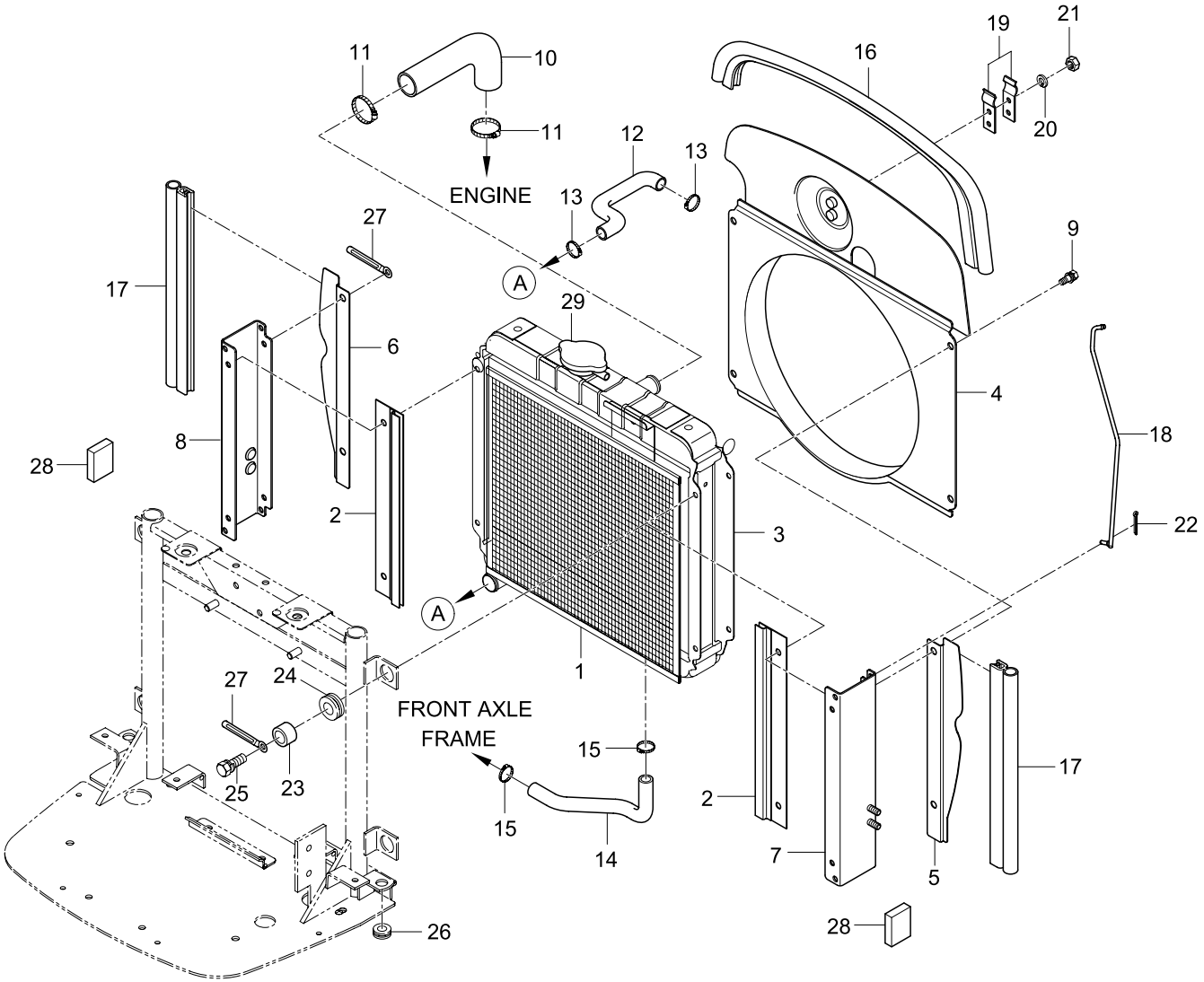

REF. NO	PART. NO	DESCRIPTION	Q'TY								I.C	REMARK
			CK20	CK20J	CK20H	CK20HJ	CK20-EU	CK20J-EU	CK20H-EU	CK20HJ-EU		
01	T2350-13112	NET, RADIATOR	1	1	1	1	1	1	1	1		
02	T2350-13121	GUIDE, RADIATOR NET	2	2	2	2	2	2	2	2		
03	T2350-13511	RADIATOR	1	1	1	1	1	1	1	1		
03	T2350-13512	RADIATOR	1	1	1	1	1	1	1	1		
04	T2350-13521	SHROUD, FAN	1	1	1	1	1	1	1	1		
04	T2350-13522	SHROUD, FAN	1	1	1	1	1	1	1	1		
05	T2350-13531	PLATE, STAY (LH)	1	1	1	1	1	1	1	1		
05	T2350-13532	PLATE, STAY (LH)	1	1	1	1	1	1	1	1		
06	T2350-13541	PLATE, STAY (RH)	1	1	1	1	1	1	1	1		
06	T2350-13542	PLATE, STAY (RH)	1	1	1	1	1	1	1	1		
07	T2350-50362	SUPPORT, RADIATOR (LH)	1	1	1	1	1	1	1	1		
08	T2350-50372	SUPPORT, RADIATOR (RH)	1	1	1	1	1	1	1	1		
09	01123-50816	BOLT	4	4	4	4	4	4	4	4		
10	E5205-72863	HOSE 1, WATER	1	1	1	1	1	1	1	1		
11	E5205-72781	BAND	2	2	2	2	2	2	2	2		
12	E5700-73382	HOSE, WATER RETURN	1	1	1	1	1	1	1	1		
13	E5700-73361	BAND, HOSE	2	2	2	2	2	2	2	2		
14	T2350-13551	HOSE, DRAIN	1	1	1	1	1	1	1	1		
15	E5700-73361	BAND, HOSE	2	2	2	2	2	2	2	2		
16	T2350-13561	RUBBER 1 (RADIATOR)	1	1	1	1	1	1	1	1		
17	T2350-13571	RUBBER 2 (RADIATOR)	2	2	2	2	2	2	2	2		
18	T2350-50621	ROD (BONNET)	1	1	1	1	1	1	1	1		
18	T2350-50622	ROD (BONNET)	1	1	1	1	1	1	1	1		
19	T2350-50641	STOPPER	2	2	2	2	2	2	2	2		
20	04512-50060	WASHER, SPRING	2	2	2	2	2	2	2	2		

REF. NO	PART. NO	DESCRIPTION	Q'TY								I.C	REMARK
			CK20	CK20J	CK20H	CK20HJ	CK20-EU	CK20J-EU	CK20H-EU	CK20HJ-EU		
21	02114-50060	NUT	2	2	2	2	2	2	2	2		
22	05511-51615	PIN, SPLIT	1	1	1	1	1	1	1	1		
23	T2350-50421	SPACER (RADIATOR SUPPORT)	4	4	4	4	4	4	4	4		
24	T2350-50431	GROMMET (RADIATOR SUPPORT)	4	4	4	4	4	4	4	4		
25	01127-50825	BOLT	4	4	4	4	4	4	4	4		
26	T4682-50251	GROMMET	2	2	2	2	2	2	2	2		
27	37150-3447-1	HOLDER, WIRE	2	2	2	2	2	2	2	2		
28	T2350-50391	SPONGE	2	2	2	2	2	2	2	2		
29	15305-7263-0	CAP (RADIATOR)	1	1	1	1	1	1	1	1		

T040 WATER TANK GROUP

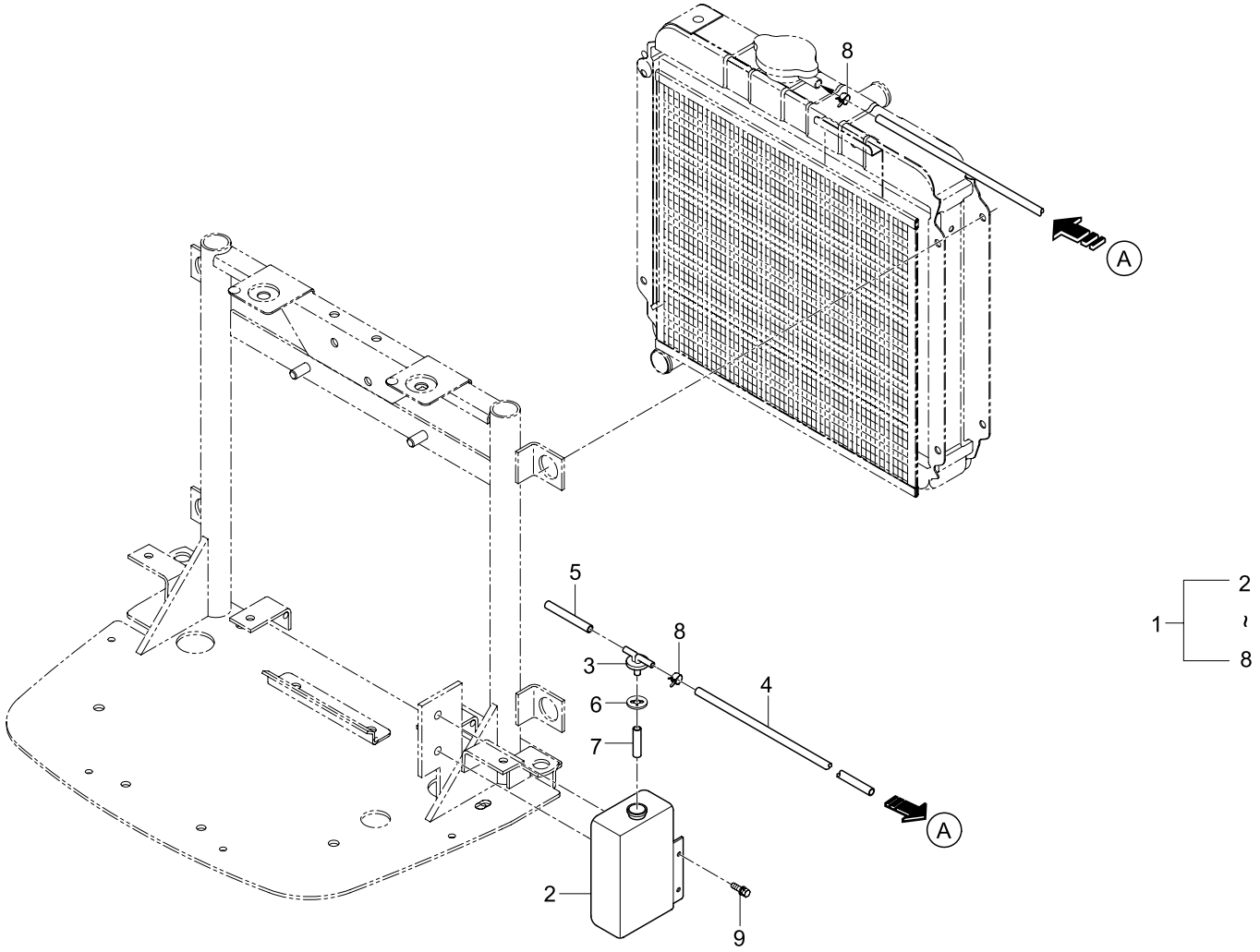

REF. NO	PART. NO	DESCRIPTION	Q'TY								I.C	REMARK
			CK20	CK20J	CK20H	CK20HJ	CK20-EU	CK20J-EU	CK20H-EU	CK20HJ-EU		
01	T2350-13601	WATER TANK ASS'Y	1	1	1	1	1	1	1	1		
02	T2350-13611	TANK, WATER	1	1	1	1	1	1	1	1		
03	15531-7242-2	CAP	1	1	1	1	1	1	1	1		
04	E5800-72711	HOSE, OVERFLOW	1	1	1	1	1	1	1	1		
05	T2350-13601004	HOSE 1	1	1	1	1	1	1	1	1		
06	15532-7243-2	PACKING	1	1	1	1	1	1	1	1		
07	T2350-13601006	HOSE 2	1	1	1	1	1	1	1	1		
08	14971-4275-1	CLAMP, HOSE	2	2	2	2	2	2	2	2		
09	01125-50816	BOLT	2	2	2	2	2	2	2	2		

T100 CLUTCH GROUP

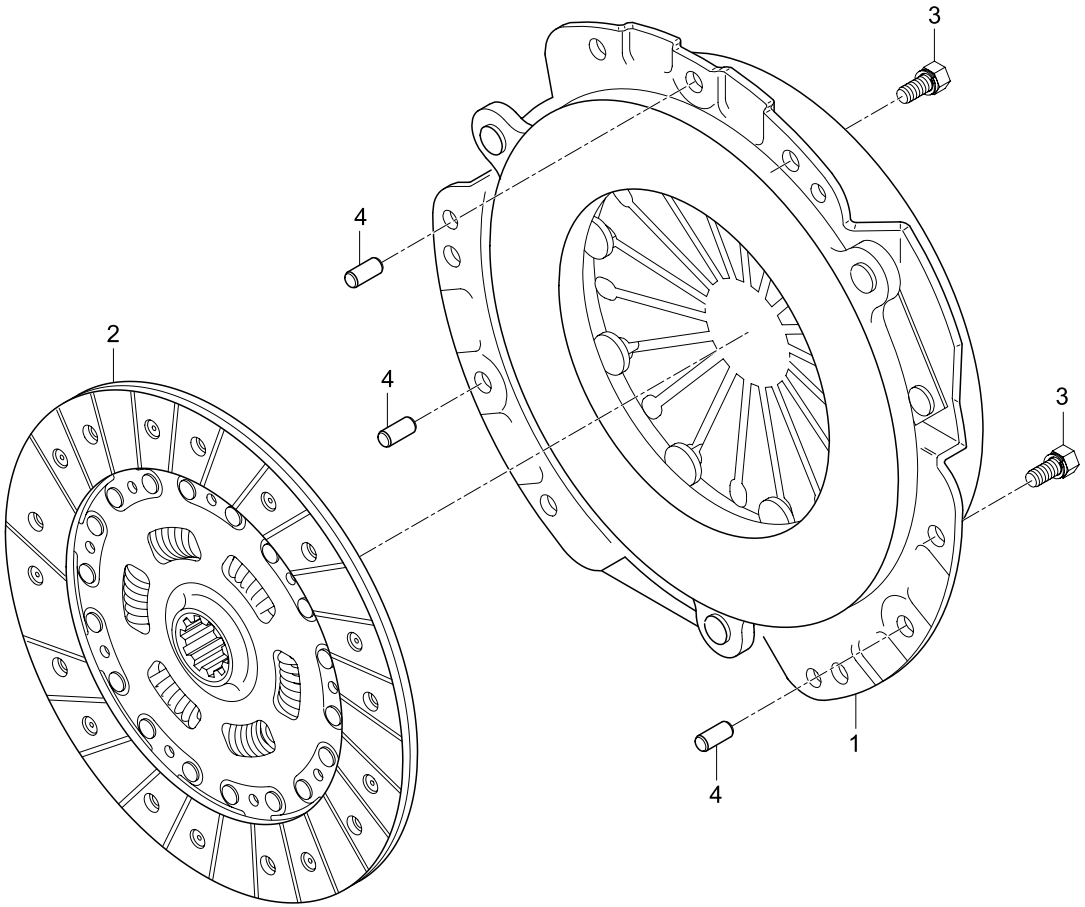

REF. NO	PART. NO	DESCRIPTION	Q'TY								I.C	REMARK
			CK20	CK20J	CK20H	CK20HJ	CK20-EU	CK20J-EU	CK20H-EU	CK20HJ-EU		
01	76591-1340-1	CLUTCH COVER ASS'Y	1	1	1	1	1	1	1	1		
02	T2305-13301	CLUTCH DISC ASS'Y	1	1	1	1	1	1	1	1		
02	T2305-13302	CLUTCH DISC ASS'Y	1	1	1	1	1	1	1	1		
03	01123-50816	BOLT	6	6	6	6	6	6	6	6		
04	05012-00818	PIN, STRAIGHT	3	3	3	3	3	3	3	3		

T110 CLUTCH LEVER GROUP

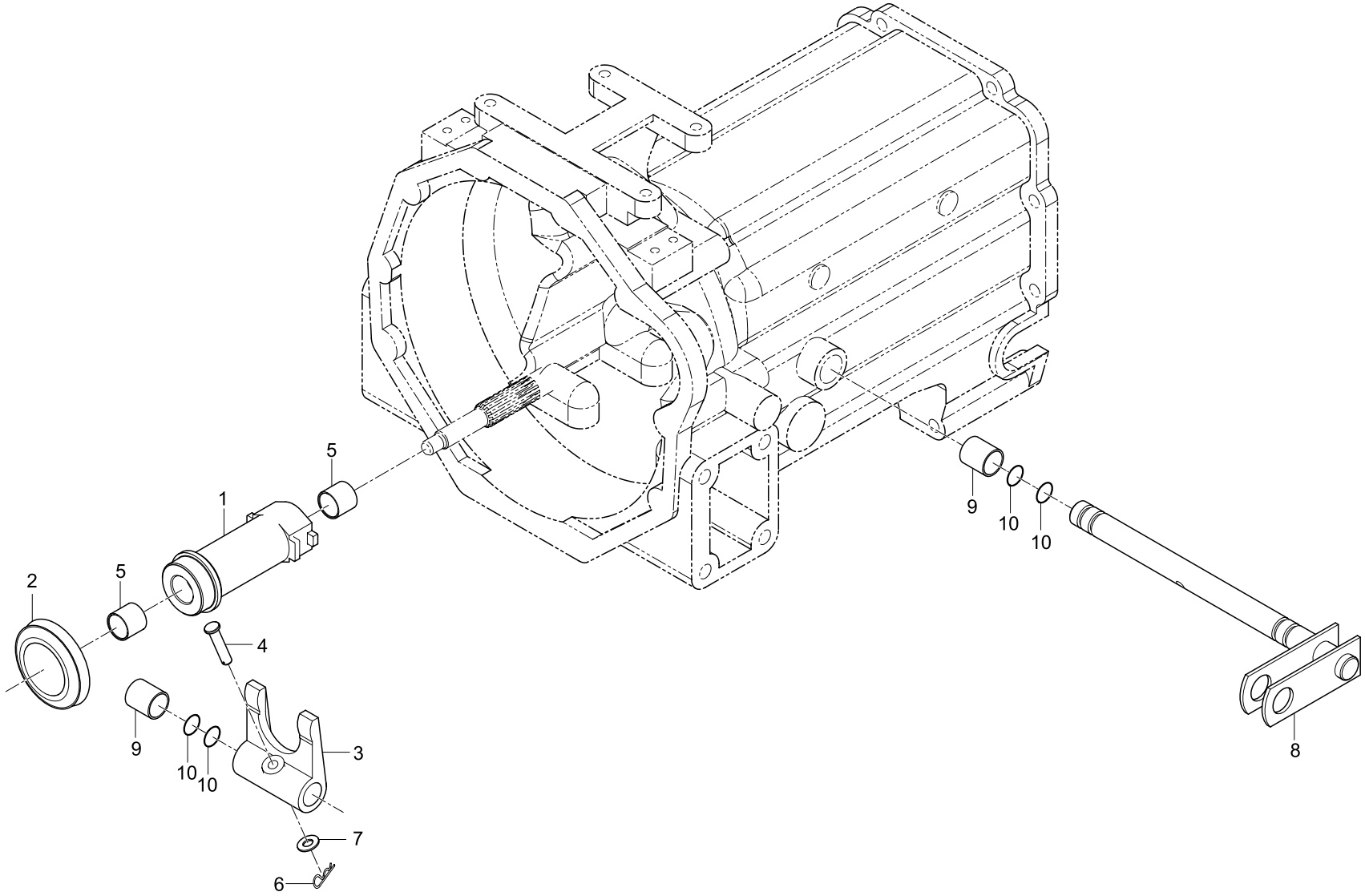

REF. NO	PART. NO	DESCRIPTION	Q'TY								I.C	REMARK
			CK20	CK20J	CK20H	CK20HJ	CK20-EU	CK20J-EU	CK20H-EU	CK20HJ-EU		
01	T2350-14831	HUB, CLUTCH RELEASE	1	1	1	1	1	1	1	1		
02	08490-00001	BEARING, THRUST BALL	1	1	1	1	1	1	1	1		
03	T2320-14722	FORK, CLUTCH RELEASE	1	1	1	1	1	1	1	1		
04	05112-50840	PIN, JOINT	1	1	1	1	1	1	1	1		
05	T2305-14841	BUSHING	2	2	2	2	2	2	2	2		
06	05511-50220	PIN, SNAP	1	1	1	1	1	1	1	1		
07	04012-50080	WASHER, PLAIN	1	1	1	1	1	1	1	1		
08	T2350-14742	LEVER, CLUTCH	1	1	1	1	1	1	1	1		
09	T2305-14261	BUSHING	2	2	2	2	2	2	2	2		
10	04811-00160	O-RING	4	4	4	4	4	4	4	4		

T120 CLUTCH PEDAL GROUP

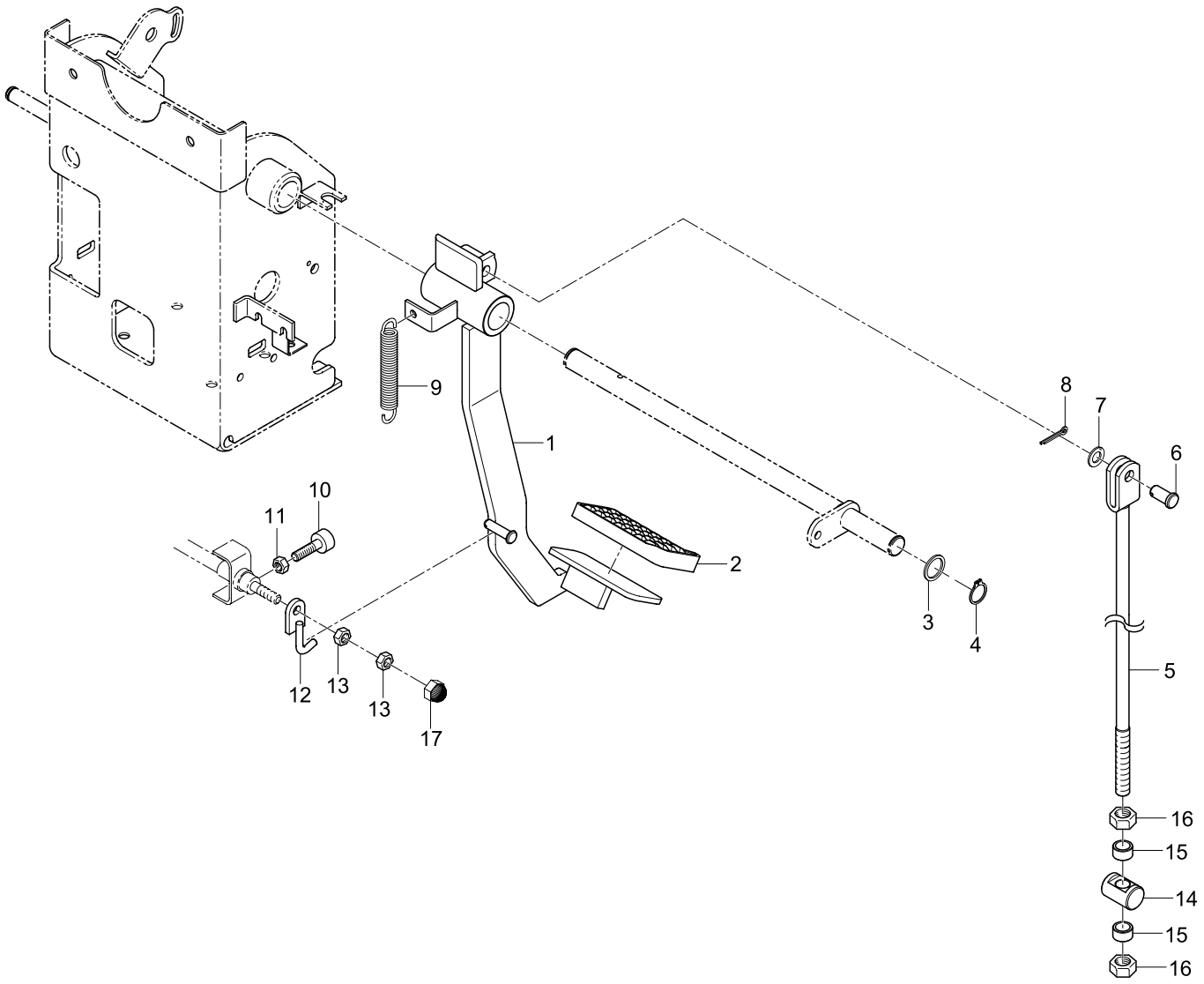

REF. NO	PART. NO	DESCRIPTION	Q'TY								I.C	REMARK
			CK20	CK20J	CK20H	CK20HJ	CK20-EU	CK20J-EU	CK20H-EU	CK20HJ-EU		
01	T2350-55512	PEDAL, CLUTCH	1	1	1	1	1	1	1	1		
02	T2670-55531	COVER, PEDAL	1	1	1	1	1	1	1	1		
03	84612-1445-0	COLLAR	1	1	1	1	1	1	1	1		
04	04612-00250	RING, SNAP	1	1	1	1	1	1	1	1		
05	T2350-55522	ROD, CLUTCH	1	1	1	1	1	1	1	1		
06	05122-51025	PIN, JOINT	1	1	1	1	1	1	1	1		
07	04013-50100	WASHER, PLAIN	1	1	1	1	1	1	1	1		
08	05511-50318	PIN, SPLIT	1	1	1	1	1	1	1	1		
09	T2350-55961	SPRING, BRAKE	1	1	1	1	1	1	1	1		
10	T2350-55881	BOLT, ADJUSTING	1	1	1	1	1	1	1	1		
11	02114-50080	NUT	1	1	1	1	1	1	1	1		
12	T2350-55871	RING (CLUTCH PEDAL)	1	1	1	1	1	1	1	1		
13	02112-50080	NUT	2	2	2	2	2	2	2	2		
14	T2350-55531	PIN, CLUTCH ROD	1	1	1	1	1	1	1	1		
15	T2350-55541	SPACER (CLUTCH ROD SUPPORT)	2	2	2	2	2	2	2	2		
16	02172-50120	NUT	2	2	2	2	2	2	2	2		
17	T4815-93211	CAP, NUT	1	1	1	1	1	1	1	1		

T130 CLUTCH HOUSING 1 GROUP

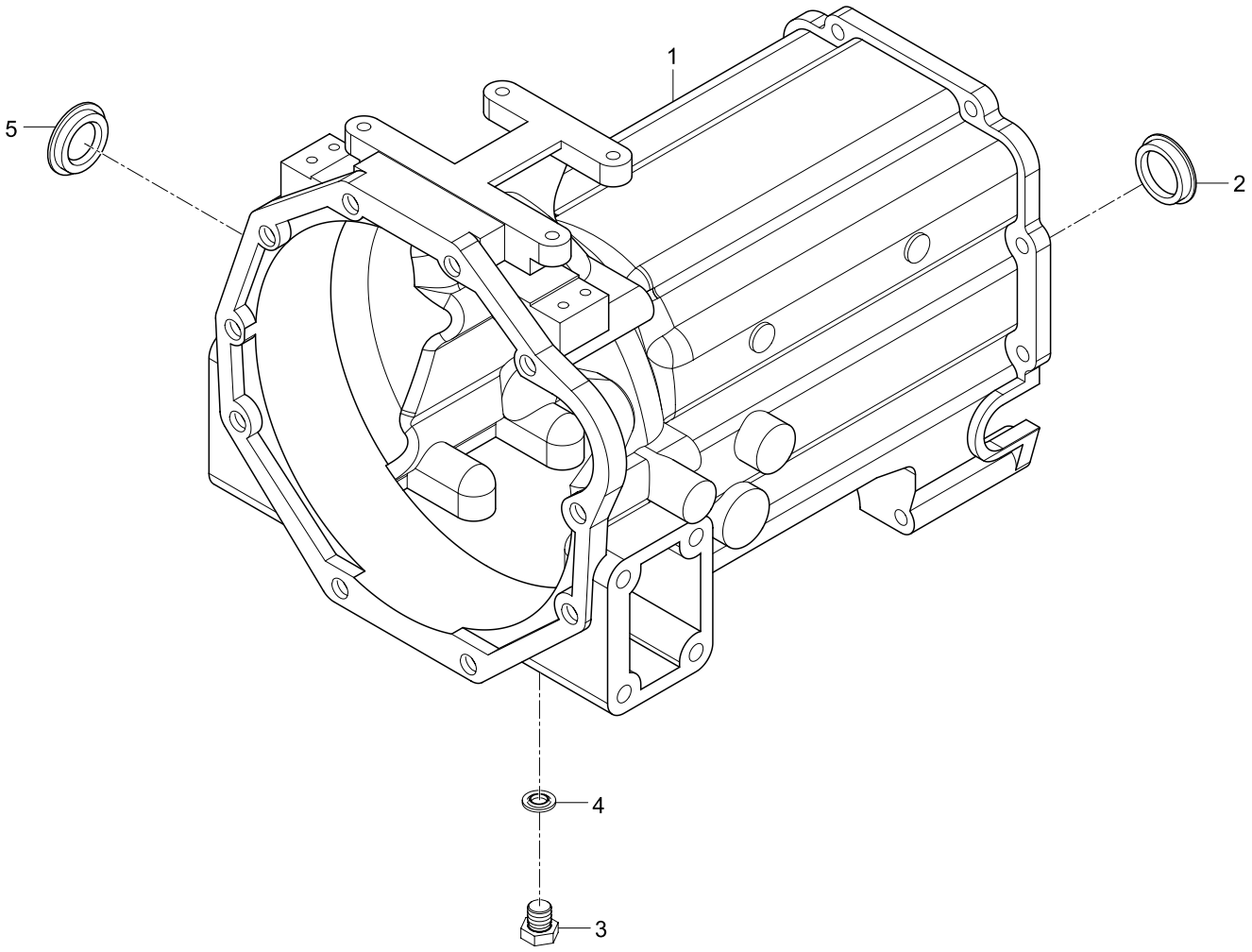

REF. NO	PART. NO	DESCRIPTION	Q'TY								I.C	REMARK
			CK20	CK20J	CK20H	CK20HJ	CK20-EU	CK20J-EU	CK20H-EU	CK20HJ-EU		
01	T2350-14113	HOUSING, CLUTCH	1	1			1	1				
01	T2350-14114	HOUSING, CLUTCH	1	1			1	1				
01	T2360-14114	HOUSING, CLUTCH			1	1			1	1		
01	T2360-14115	HOUSING, CLUTCH			1	1			1	1		
02	66592-3517-1	CAP	1	1	1	1	1	1	1	1		
02	T2305-51191	CAP	1	1	1	1	1	1	1	1		
03	06331-35010	PLUG	1	1	1	1	1	1	1	1		
04	04717-01000	WASHER, SEAL	1	1	1	1	1	1	1	1		
05	T2305-51191	CAP	1	1	1	1	1	1	1	1		

T140 CLUTCH HOUSING 2 GROUP

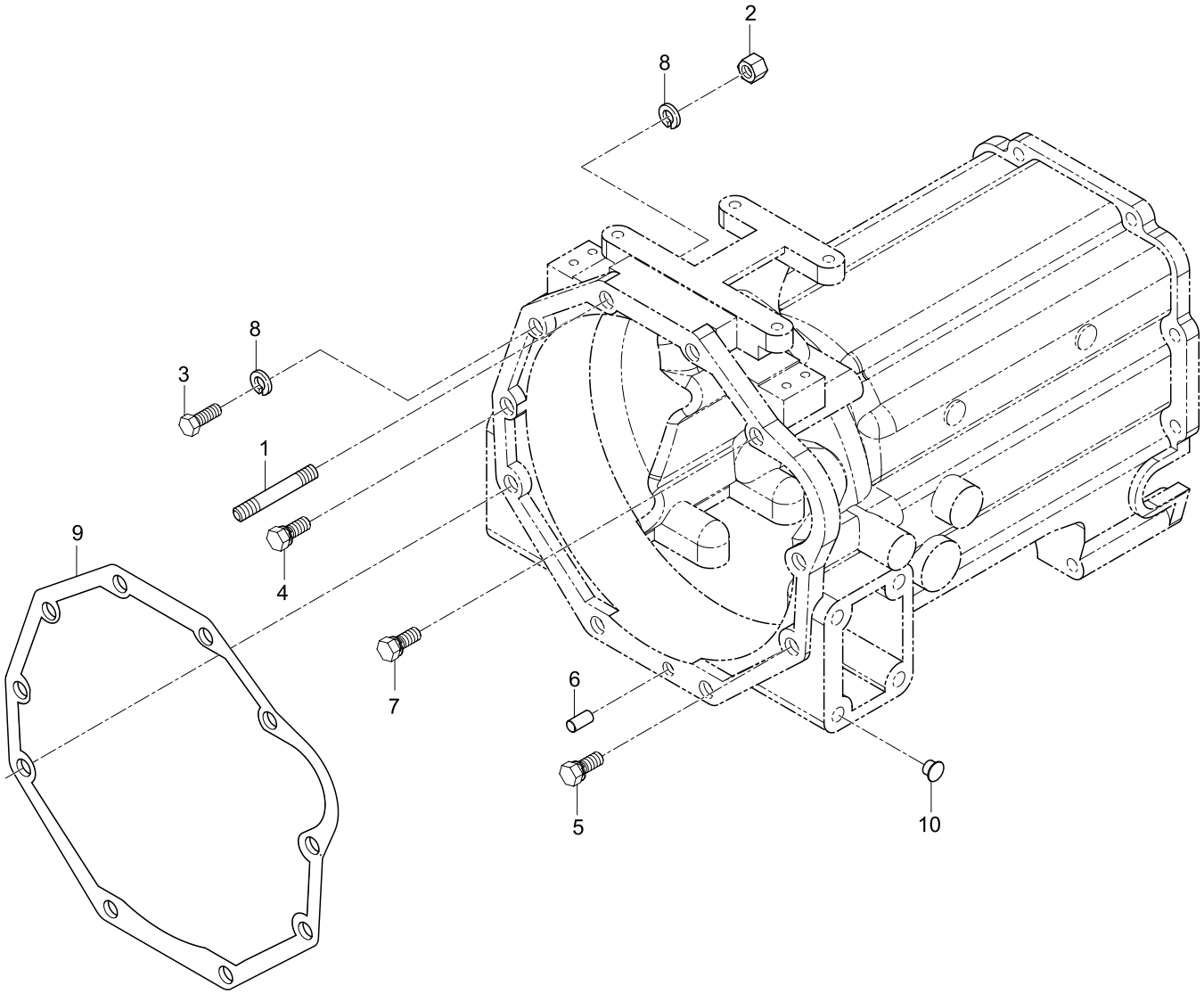

REF. NO	PART. NO	DESCRIPTION	Q'TY								I.C	REMARK
			CK20	CK20J	CK20H	CK20HJ	CK20-EU	CK20J-EU	CK20H-EU	CK20HJ-EU		
01	01517-51090	STUD	2	2	2	2	2	2	2	2		
02	02176-50100	NUT	2	2	2	2	2	2	2	2		
03	01173-51003	BOLT	1	1	1	1	1	1	1	1		
04	01133-51032	BOLT	1	1	1	1	1	1	1	1		
05	01133-51245	BOLT	4	4	4	4	4	4	4	4		
06	05012-01018	PIN, STRAIGHT	2	2	2	2	2	2	2	2		
07	01133-51050	BOLT	2	2	2	2	2	2	2	2		
08	04512-50100	WASHER, SPRING	5	5	5	5	5	5	5	5		
09	T2305-51412	PACKING	1	1	1	1	1	1	1	1		
10	31220-1429-3	PLUG	8	8	8	8	8	8	8	8		

T150 HST CASE GROUP

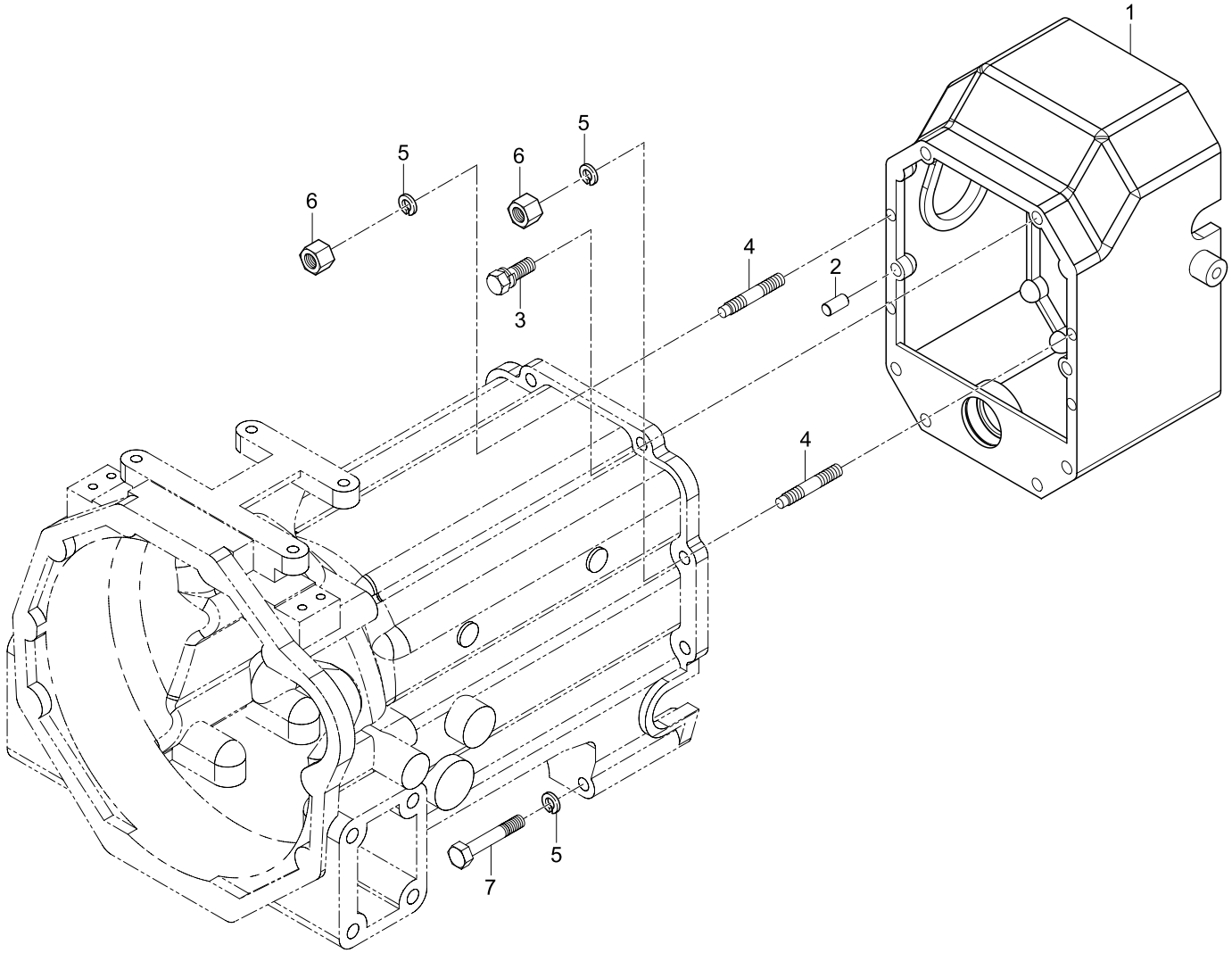

REF. NO	PART. NO	DESCRIPTION	Q'TY								I.C	REMARK
			CK20	CK20J	CK20H	CK20HJ	CK20-EU	CK20J-EU	CK20H-EU	CK20HJ-EU		
01	T2360-21141	CASE, HST			1	1			1	1		
01	T2360-21142	CASE, HST			1	1			1	1		
02	05012-01020	PIN, STRAIGHT			2	2			2	2		
03	01133-51035	BOLT			5	5			5	5		
04	01517-51030	STUD			2	2			2	2		
05	04512-50100	WASHER, SPRING			3	3			3	3		
06	02176-50100	NUT			2	2			2	2		
07	01173-51005	BOLT			1	1			1	1		

T160 MIDDLE CASE GROUP

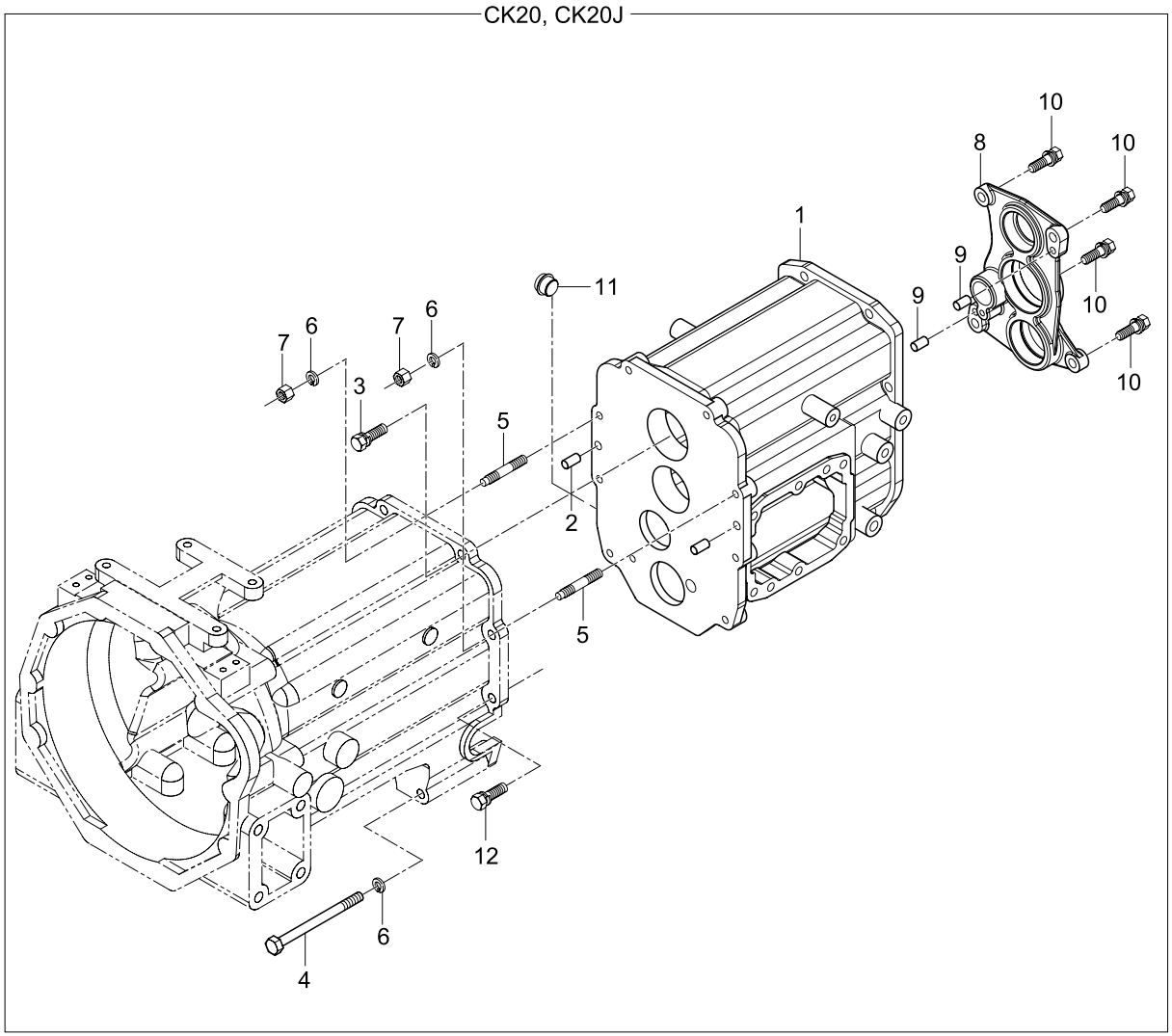

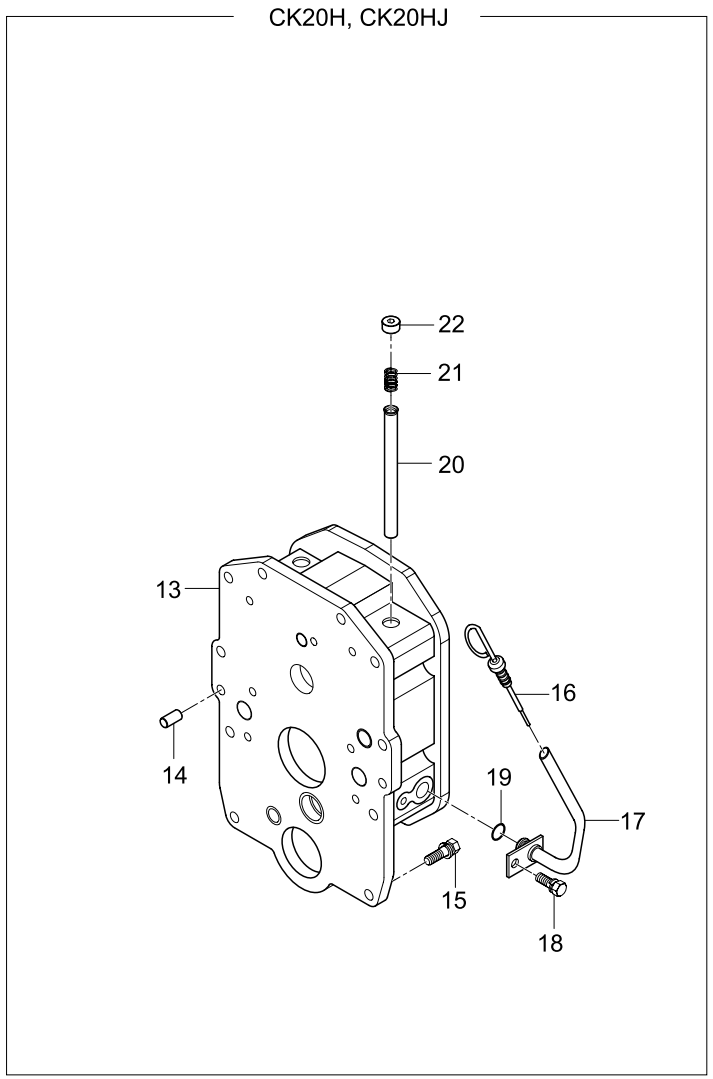

REF. NO	PART. NO	DESCRIPTION	Q'TY								I.C	REMARK
			CK20	CK20J	CK20H	CK20HJ	CK20-EU	CK20J-EU	CK20H-EU	CK20HJ-EU		
01	T2350-21152	CASE, MIDDLE	1	1			1	1				
			~3193-00010	~D194-00050			~D050-00121	~D050-00121				
01	T2350-21153	CASE, MIDDLE	1	1			1	1				
			D193-00001~	D194-00051~			D050-00122~	D050-00122~				
02	05012-01020	PIN, STRAIGHT	2	2			2	2				
03	01133-51040	BOLT	4	4			4	4				
04	T2305-37171	BOLT	1	1			1	1				
05	01517-51030	STUD	2	2			2	2				
06	04512-50100	WASHER, SPRING	3	3			3	3				
07	02176-50100	NUT	2	2			2	2				
08	T2350-21162	CASE, BEARING (MIDDLE CASE)	1	1			1	1				
			~3193-00010	~D194-00050			~D050-00121	~D050-00121				
08	T2350-21163	CASE, BEARING (MIDDLE CASE)	1	1			1	1				
			D193-00001~	D194-00051~			D050-00122~	D050-00122~				
09	05012-00818	PIN, STRAIGHT	2	2			2	2				
10	01133-51030	BOLT	4	4			4	4				
11	T4680-14211	GAUGE, OIL	1	1			1	1				
12	01133-51035	BOLT	1	1			1	1				
13	T2360-21152	CASE, MIDDLE			1	1			1	1		
14	05012-01020	PIN, STRAIGHT			2	2			2	2		
15	01133-51035	BOLT			10	10			10	10		
16	T2360-25901	GAUGE, OIL			1	1			1	1		
17	T2360-25911	TUBE, OIL GAUGE			1	1			1	1		
18	01123-50816	BOLT			1	1			1	1		
19	04811-10120	O-RING			1	1			1	1		Wrong Number
19	04811-00120	O-RING			1	1			1	1		
20	T2360-21181	HOSE, RETURN			1	1			1	1		
21	T2360-21192	SPRING			1	1			1	1		
22	E5800-96031	PLUG			2	2			2	2		

T170 TRANSMISSION CASE GROUP

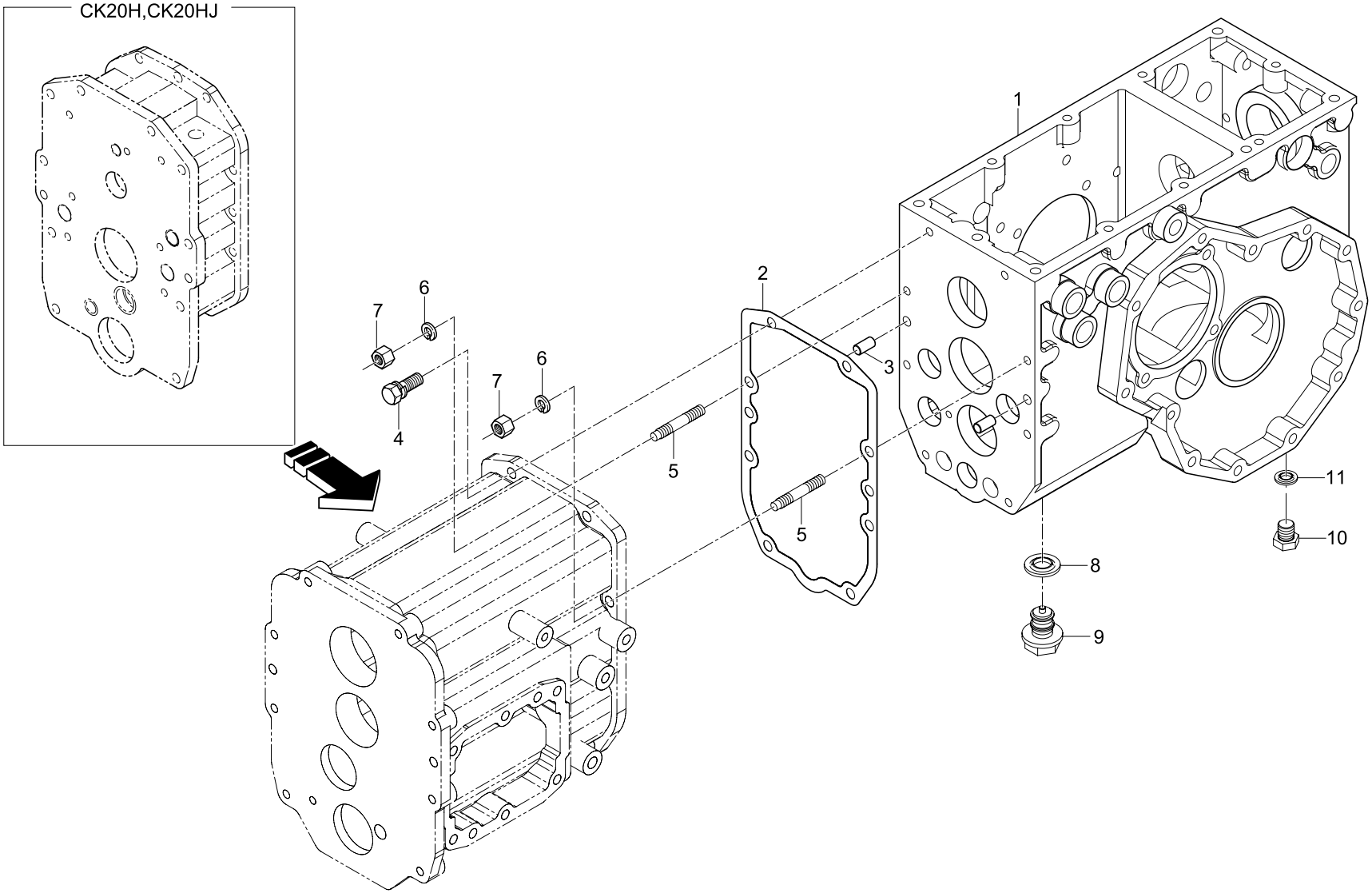

REF. NO	PART. NO	DESCRIPTION	Q'TY								I.C	REMARK
			CK20	CK20J	CK20H	CK20HJ	CK20-EU	CK20J-EU	CK20H-EU	CK20HJ-EU		
01	T2350-21112	CASE, TRANSMISSION	1	1	1	1	1	1	1	1		
01	T2350-21113	CASE, TRANSMISSION	1	1	1	1	1	1	1	1		
01	T2350-21114	CASE, TRANSMISSION	1	1	1	1	1	1	1	1		
02	T2350-21131	PACKING	1	1	1	1	1	1	1	1		
03	05012-01020	PIN, STRAIGHT	2	2	2	2	2	2	2	2		
04	01133-51035	BOLT	6	6	6	6	6	6	6	6		
05	01517-51030	STUD	2	2	2	2	2	2	2	2		
06	04512-50100	WASHER, SPRING	2	2	2	2	2	2	2	2		
07	02176-50100	NUT	2	2	2	2	2	2	2	2		
08	04717-02650	WASHER, SEAL	1	1	1	1	1	1	1	1		
09	T4260-14271	PLUG, DRAIN	1	1	1	1	1	1	1	1		
10	06331-35010	PLUG	2	2	2	2	2	2	2	2		
11	04717-01000	WASHER, SEAL	2	2	2	2	2	2	2	2		

T180 MAIN SHAFT GROUP

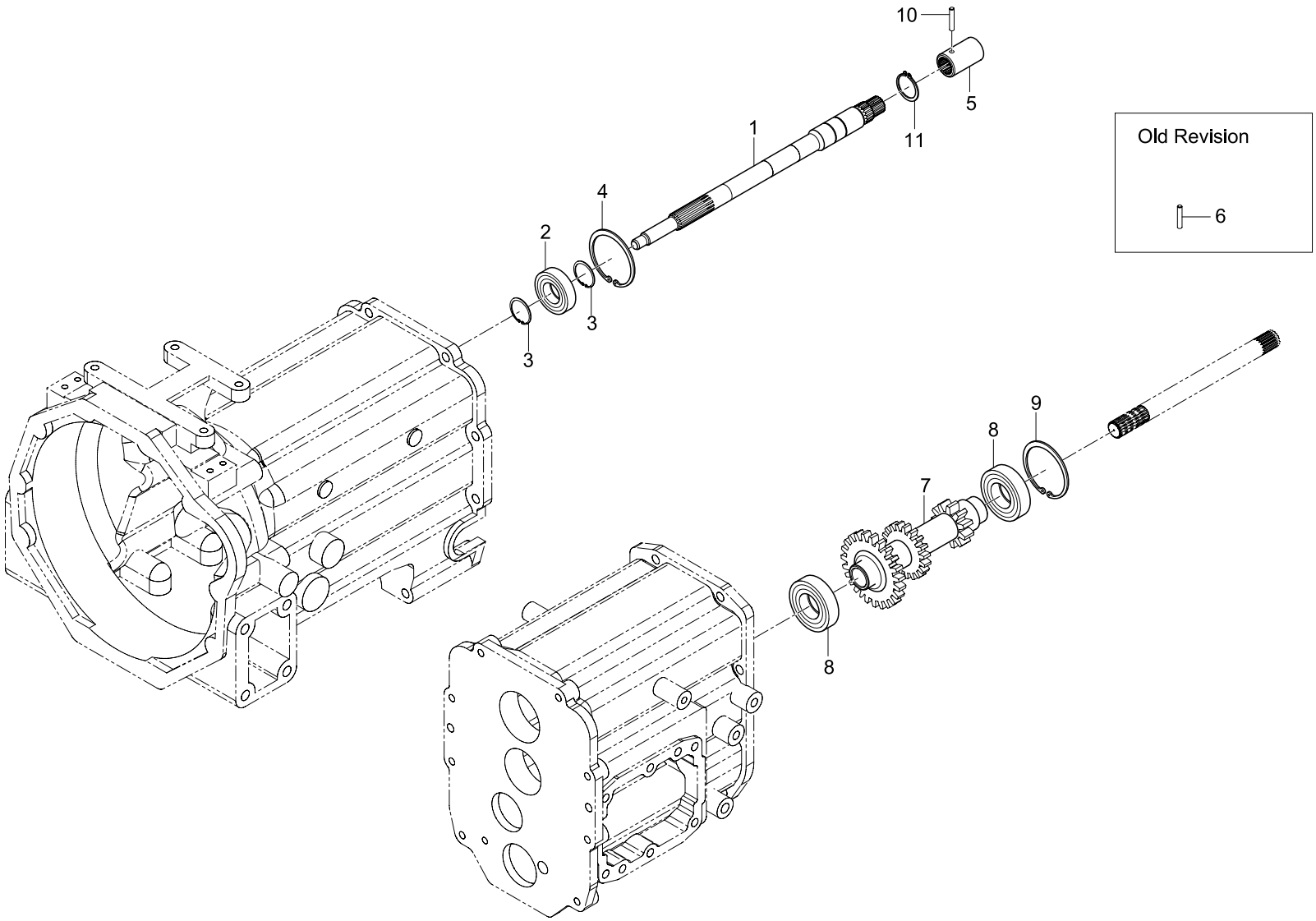

REF. NO	PART. NO	DESCRIPTION	Q'TY								I.C	REMARK
			CK20	CK20J	CK20H	CK20HJ	CK20-EU	CK20J-EU	CK20H-EU	CK20HJ-EU		
01	T2350-21621	SHAFT, MAIN	1	1	1	1	1	1	1	1	◄	
			~3193-00010	~3194-00320	~3195-00120	~D196-00200	~D050-00068	~D050-00068	~D051-00108	~D051-00108	✕	
01	T2350-21622	SHAFT, MAIN	1	1	1	1	1	1	1	1	◄	
			D193-00001~	D194-00001~	D195-00001~	D196-00200~	D050-00069~	D050-00069~	D051-00109~	D051-00109~		
02	08141-06205	BEARING, BALL	1	1	1	1	1	1	1	1		
03	04612-00250	RING, SNAP	2	2	2	2	2	2	2	2		
04	04611-00520	RING, SNAP	1	1	1	1	1	1	1	1		
05	44512-1373-3	COUPLING	1	1	1	1	1	1	1	1	◄	
			~3193-00010	~3194-00320	~3195-00120	~D196-00200	~D050-00068	~D050-00068	~D051-00108	~D051-00108	✕	
05	T2350-21631	COUPLING	1	1	1	1	1	1	1	1	◄	
			D193-00001~	D194-00001~	D195-00001~	D196-00200~	D050-00069~	D050-00069~	D051-00109~	D051-00109~		
06	05411-00528	PIN, SPRING	1	1	1	1	1	1	1	1		Deleted
			~3193-00010	~3194-00320	~3195-00120	~D196-00200	~D050-00068	~D050-00068	~D051-00108	~D051-00108		
07	T2350-21531	GEAR, MAIN SHAFT	1	1			1	1				
08	08101-06206	BEARING, BALL	2	2			2	2				
09	04611-00620	RING, SNAP	1	1			1	1				
10	05012-00530	PIN, STRAIGHT	1	1	1	1	1	1	1	1		
11	04612-00340	RING, SNAP	1	1	1	1	1	1	1	1		

T190 HST OUTPUT SHAFT GROUP

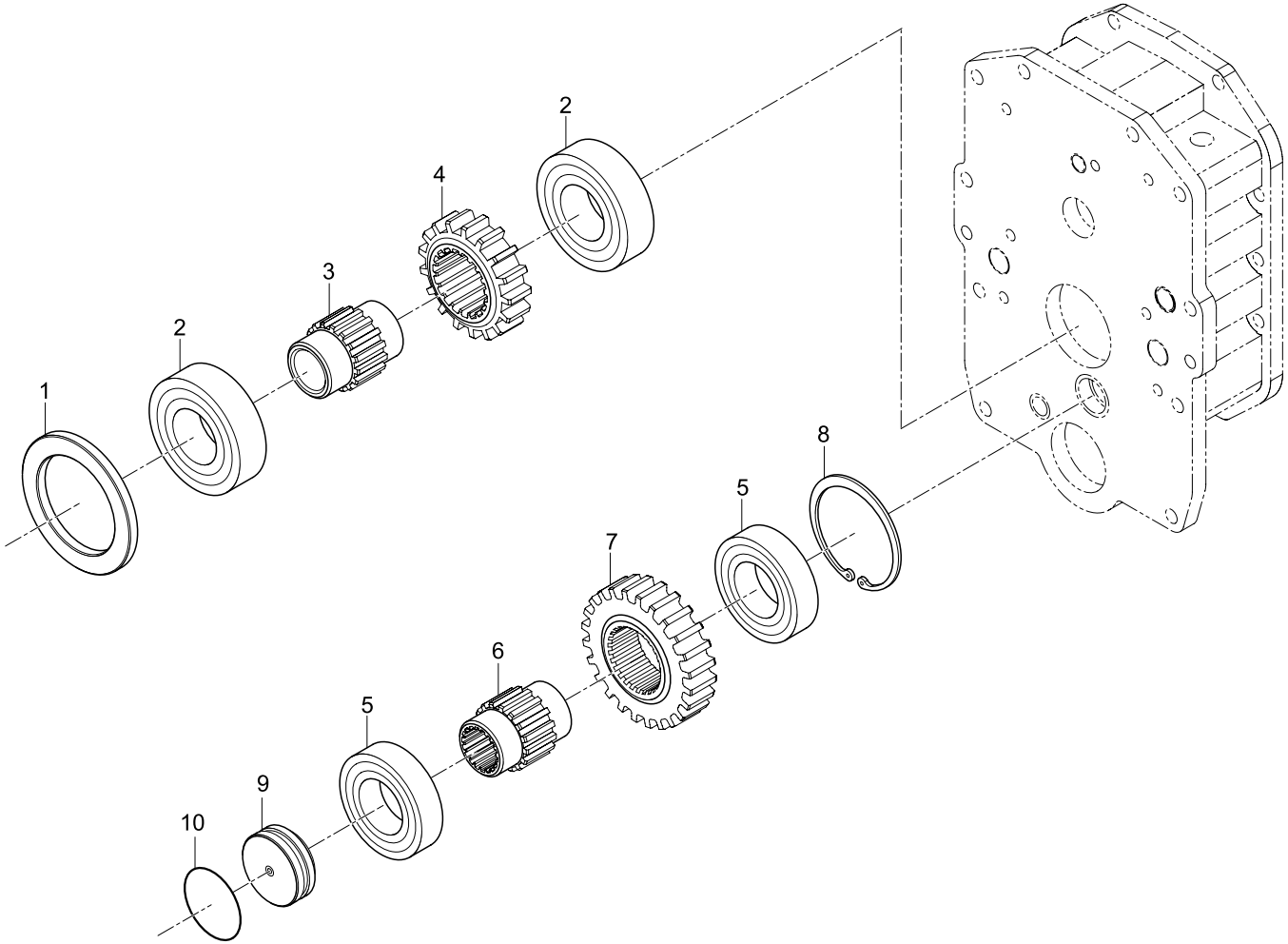

REF. NO	PART. NO	DESCRIPTION	Q'TY								I.C	REMARK
			CK20	CK20J	CK20H	CK20HJ	CK20-EU	CK20J-EU	CK20H-EU	CK20HJ-EU		
01	T2360-21461	SPACER (HST POWER)			1	1			1	1		
02	08101-06205	BEARING, BALL			2	2			2	2		
03	T2360-21431	BOSS, SPLINE (19 GEAR)			1	1			1	1		
04	T2360-21421	GEAR, 19			1	1			1	1		
05	08101-06005	BEARING, BALL			2	2			2	2		
06	T2360-21451	BOSS, SPLINE (23 GEAR)			1	1			1	1		
07	T2360-21441	GEAR, 23			1	1			1	1		
08	04611-00470	RING, SNAP			1	1			1	1		
09	T2360-23692	COVER (RANGE SHAFT)			1	1			1	1		
09	T2360-23693	COVER (RANGE SHAFT)			1	1			1	1		
10	04811-10290	O-RING			1	1			1	1		

T200 COUNTER SHAFT GROUP

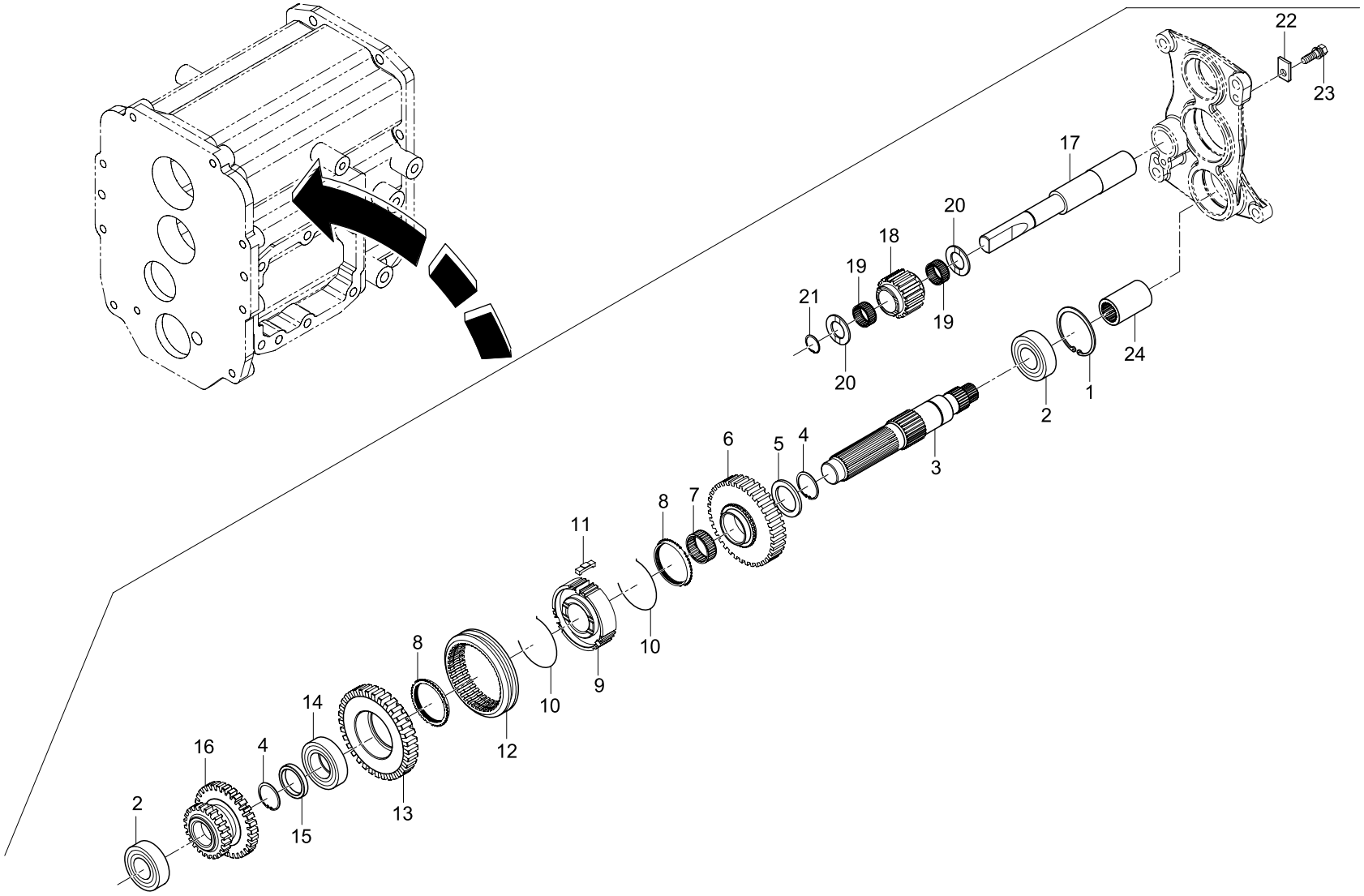

REF. NO	PART. NO	DESCRIPTION	Q'TY								I.C	REMARK
			CK20	CK20J	CK20H	CK20HJ	CK20-EU	CK20J-EU	CK20H-EU	CK20HJ-EU		
01	04611-00520	RING, SNAP	1	1			1	1				
02	08101-06205	BEARING, BALL	2	2			2	2				
03	T2350-21751	SHAFT, COUNTER	1	1			1	1				
04	04612-00300	RING, SNAP	2	2			2	2				
05	T2305-21661	COLLAR	1	1			1	1				
06	T2350-21711	GEAR, 37	1	1			1	1				
07	08823-03522	BEARING, NEEDLE	1	1			1	1				
08	T4240-21792	RING, SYNCHRONIZER	2	2			2	2				
09	T2350-21741	HUB, SYNCHRO	1	1			1	1				
10	38360-2178-1	SPRING	2	2			2	2				
11	T2610-21812	KEY, SYNCHRONIZER	3	3			3	3				
12	T2610-21753	SHIFT	1	1			1	1				
12	T2610-21754	SHIFT	1	1			1	1				
13	T2350-21731	GEAR, 40	1	1			1	1				
14	08101-06006	BEARING, BALL	1	1			1	1				
15	T2350-21771	SPACER (COUNTER SHAFT)	1	1			1	1				
16	T2350-21722	GEAR, 22-32	1	1			1	1				
17	T2350-23111	SHAFT, REVERSE	1	1			1	1				
18	T2350-21811	GEAR, 16	1	1			1	1				
19	08822-02620	BEARING, NEEDLE	2	2			2	2				
20	T2305-25241	COLLAR, THRUST	2	2			2	2				
21	04612-00200	RING, SNAP	1	1			1	1				
22	T2350-23131	STOPPER	1	1			1	1				
22	T2350-23132	STOPPER	1	1			1	1				
23	01123-50816	BOLT	1	1			1	1				

REF. NO	PART. NO	DESCRIPTION	Q'TY								I.C	REMARK
			CK20	CK20J	CK20H	CK20HJ	CK20-EU	CK20J-EU	CK20H-EU	CK20HJ-EU		
24	T2350-21791	COUPLING (COUNTER SHAFT)	1	1			1	1				

T210 RANGE SHAFT GROUP

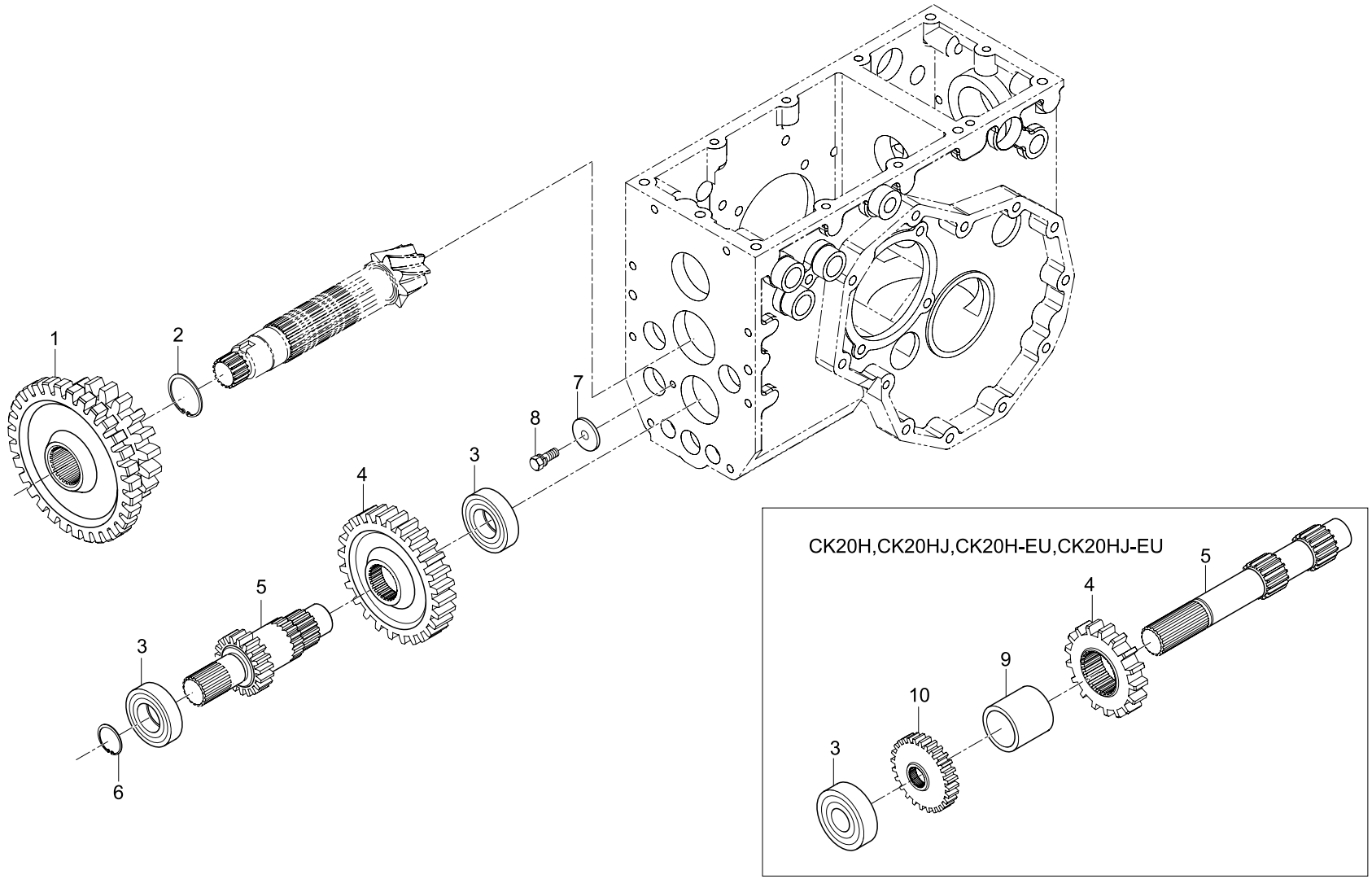

REF. NO	PART. NO	DESCRIPTION	Q'TY								I.C	REMARK
			CK20	CK20J	CK20H	CK20HJ	CK20-EU	CK20J-EU	CK20H-EU	CK20HJ-EU		
01	T2350-23521	GEAR, 42-22	1	1			1	1				
01	T2360-23521	GEAR, 33-20			1	1			1	1		
02	04612-00280	RING, SNAP	1	1	1	1	1	1	1	1		
03	08101-06304	BEARING, BALL	2	2	2	2	2	2	2	2		
04	T2350-23631	GEAR, 34	1	1			1	1				
04	T2360-23631	GEAR, 36			1	1			1	1		
05	T2350-23611	SHAFT, RANGE	1	1			1	1				
05	T2360-23612	SHAFT, RANGE			1	1			1	1		
06	04612-00200	RING, SNAP	1	1			1	1				
07	T2350-23671	STOPPER	1	1			1	1				
08	01123-50816	BOLT	1	1			1	1				
09	T2360-23641	SPACER 1			1	1			1	1		
10	T2360-23621	GEAR, 23 (RANGE)			1	1			1	1		

T220 PTO DRIVING SHAFT GROUP

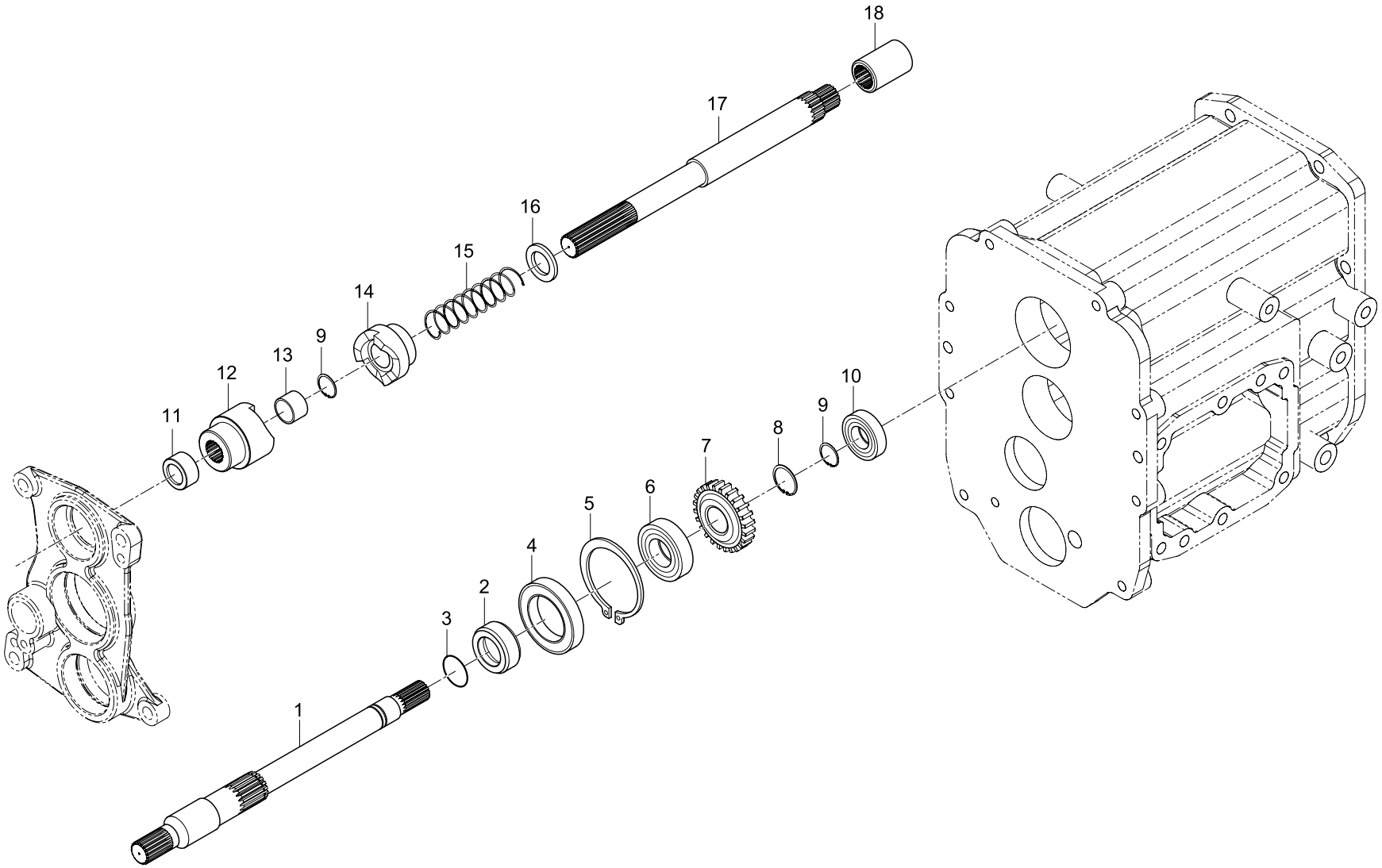

REF. NO	PART. NO	DESCRIPTION	Q'TY								I.C	REMARK
			CK20	CK20J	CK20H	CK20HJ	CK20-EU	CK20J-EU	CK20H-EU	CK20HJ-EU		
01	T2350-25261	SHAFT 1, PTO DRIVING	1	1			1	1				
02	T2350-25572	SPACER 1 (PTO DRIVING SHAFT 1)	1	1			1	1				
02	T2350-25573	SPACER 1 (PTO DRIVING SHAFT 1)	1	1			1	1				
03	04811-00250	O-RING	1	1			1	1				
04	09504-06211	SEAL, OIL	1	1			1	1				
05	04611-00620	RING, SNAP	1	1			1	1				
06	08101-06305	BEARING, BALL	1	1			1	1				
07	T2350-25521	GEAR, 22	1	1			1	1				
08	04612-00250	RING, SNAP	1	1			1	1				
09	04612-00200	RING, SNAP	2	2	1	1	2	2	1	1		
10	08101-06204	BEARING, BALL	1	1			1	1				
11	T2350-25581	SPACER 2 (RANGE SHAFT1)	1	1	1	1	1	1	1	1		
12	T2350-25441	CLUTCH, CAM (A)	1	1	1	1	1	1	1	1		
13	08511-01915	BUSHING,DU	1	1	1	1	1	1	1	1		
14	T2350-25452	CLUTCH, CAM (B)	1	1	1	1	1	1	1	1		
15	T2350-25462	SPRING, CAM	1	1	1	1	1	1	1	1		
16	76KP-0514	COLLAR	1	1	1	1	1	1	1	1		
17	T2350-25272	SHAFT 2, PTO DRIVING	1	1			1	1				
17	T2350-25273	SHAFT 2, PTO DRIVING	1	1			1	1				
17	T2350-25274	SHAFT 2, PTO DRIVING	1	1			1	1				
17	T2360-25272	SHAFT 2, PTO DRIVING			1	1			1	1		
17	T2360-25273	SHAFT 2, PTO DRIVING			1	1			1	1		
17	T2360-25274	SHAFT 2, PTO DRIVING			1	1			1	1		
18	T2305-44521	COUPLING	1	1	1	1	1	1	1	1		

T230 PTO SHAFT GROUP

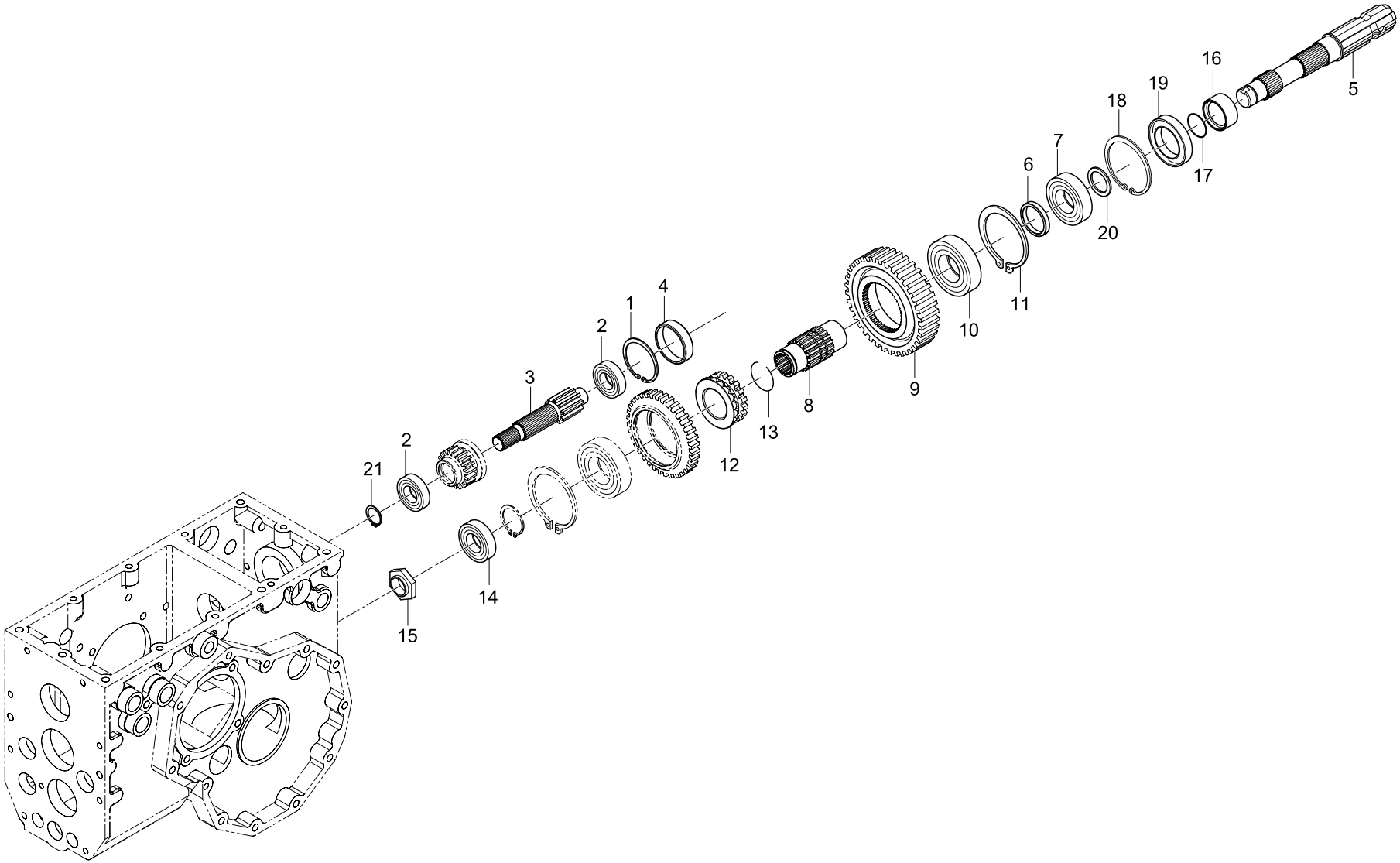

REF. NO	PART. NO	DESCRIPTION	Q'TY								I.C	REMARK
			CK20	CK20J	CK20H	CK20HJ	CK20-EU	CK20J-EU	CK20H-EU	CK20HJ-EU		
01	04611-00520	RING, SNAP	2	2	2	2	2	2	2	2		
01	04611-00520	RING, SNAP	1	1	1	1	1	1	1	1		
02	08101-06304	BEARING, BALL	2	2	2	2	2	2	2	2		
03	T2350-25281	SHAFT 3, PTO DRIVING	1	1	1	1	1	1	1	1		
03	T2350-25282	SHAFT 3, PTO DRIVING	1	1	1	1	1	1	1	1		
04	T2350-25421	CAP, 52 SEAL	1	1	1	1	1	1	1	1		
05	T2350-25211	SHAFT, PTO	1	1	1	1	1	1	1	1		
06	T2350-25381	SPACER (PTO SHAFT)	1	1	1	1	1	1	1	1		
07	08101-06206	BEARING, BALL	1	1	1	1	1	1	1	1		
08	T2350-25241	BOSS, SPLINE	1	1	1	1	1	1	1	1		
09	T2350-25121	GEAR, 49	1	1	1	1	1	1	1	1		
10	08101-06207	BEARING, BALL	1	1	1	1	1	1	1	1		
11	04611-00720	RING, SNAP	1	1	1	1	1	1	1	1		
12	T2350-25132	SHIFT, PTO CHANGE	1	1	1	1	1	1	1	1		
13	T2350-25151	RING (PTO)	1	1	1	1	1	1	1	1		
14	08101-06305	BEARING, BALL	1	1	1	1	1	1	1	1		
15	T2350-25361	NUT, 24	1	1	1	1	1	1	1	1		
16	T2350-25372	SLEEVE	1	1	1	1	1	1	1	1		
17	04811-00300	O-RING	1	1	1	1	1	1	1	1		
18	04611-00620	RING, SNAP	2	2	2	2	2	2	2	2		
18	04611-00620	RING, SNAP	1	1	1	1	1	1	1	1		
19	T2350-25391	SEAL, OIL	1	1	1	1	1	1	1	1		
20	K1200-14171	SHIM	1	1	1	1	1	1	1	1		
21	04612-00200	RING, SNAP	1	1	1	1	1	1	1	1		

T240 MID PTO SHAFT GROUP

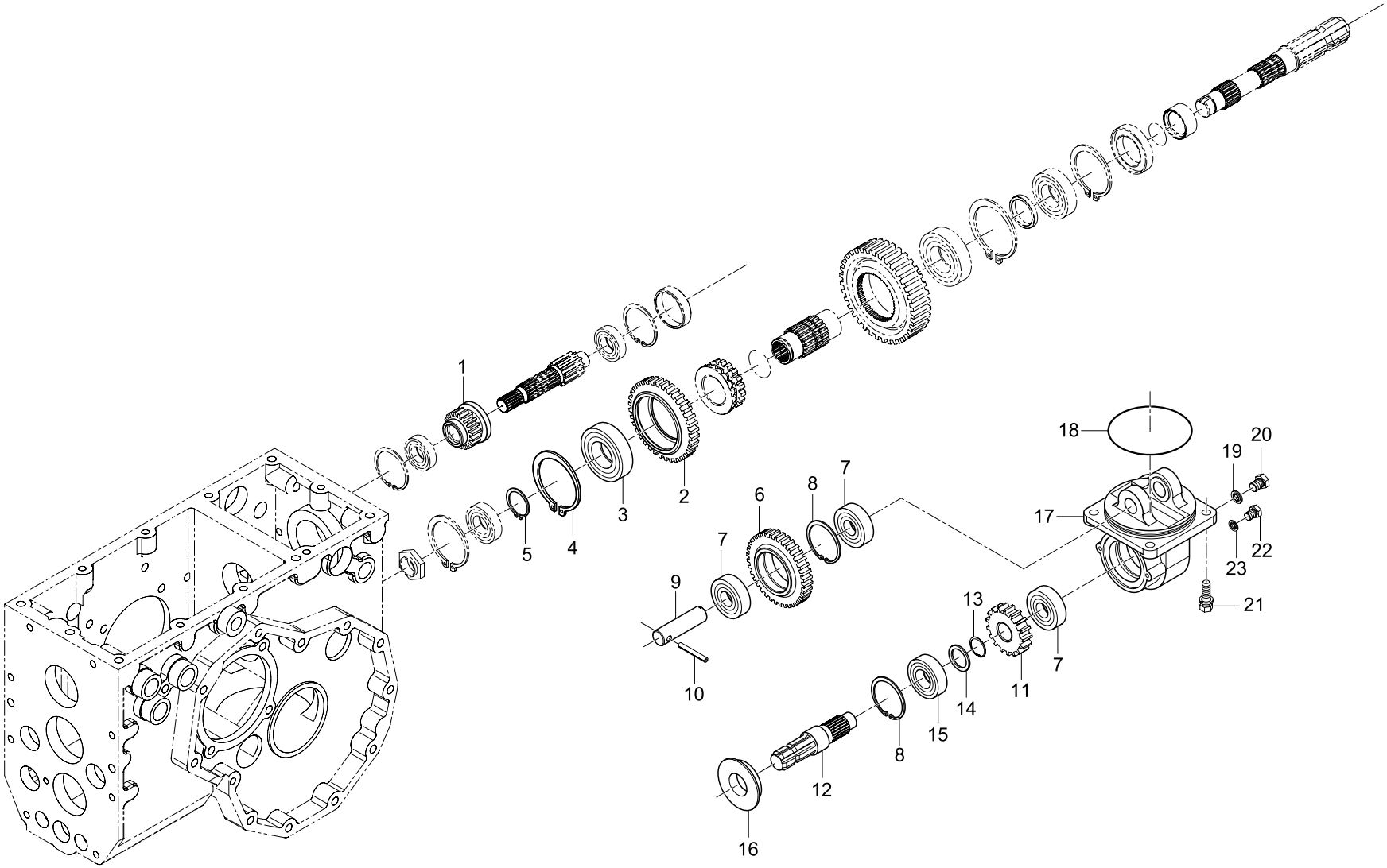

REF. NO	PART. NO	DESCRIPTION	Q'TY								I.C	REMARK
			CK20	CK20J	CK20H	CK20HJ	CK20-EU	CK20J-EU	CK20H-EU	CK20HJ-EU		
01	T2350-25251	GEAR, 17	1	1	1	1	1	1	1	1		
02	T2350-25141	GEAR, 42	1	1	1	1	1	1	1	1		
03	08101-06207	BEARING, BALL	1	1	1	1	1	1	1	1		
04	04611-00720	RING, SNAP	1	1	1	1	1	1	1	1		
05	04612-00350	RING, SNAP	1	1	1	1	1	1	1	1		
06	T2350-24151	GEAR, 37 (MID PTO)	1	1	1	1	1	1	1	1		
07	08101-06304	BEARING, BALL	3	3	3	3	3	3	3	3		
08	04611-00520	RING, SNAP	2	2	2	2	2	2	2	2		
09	T2350-24141	SHAFT, COUNTER (MID PTO)	1	1	1	1	1	1	1	1		
10	05411-00645	PIN, SPRING	1	1	1	1	1	1	1	1		
11	T2350-24161	GEAR, 23	1	1	1	1	1	1	1	1		
12	T2350-24121	SHAFT, MID PTO	1	1	1	1	1	1	1	1		
13	04612-00250	RING, SNAP	1	1	1	1	1	1	1	1		
14	K2400-19371	COLLAR	1	1	1	1	1	1	1	1		
15	08101-06205	BEARING, BALL	1	1	1	1	1	1	1	1		
16	M9100-33212	SEAL, OIL	1	1	1	1	1	1	1	1		
17	T2350-24112	CASE, MID PTO	1	1	1	1	1	1	1	1		
18	04811-50950	O-RING	1	1	1	1	1	1	1	1		
19	04717-01200	WASHER, SEAL	1	1	1	1	1	1	1	1		
20	06331-35012	PLUG	1	1	1	1	1	1	1	1		
21	01133-51030	BOLT	4	4	4	4	4	4	4	4		
22	06331-35010	PLUG	1	1	1	1	1	1	1	1		
23	04717-01000	WASHER, SEAL	1	1	1	1	1	1	1	1		

T250 SPIRAL BEVEL GEAR GROUP

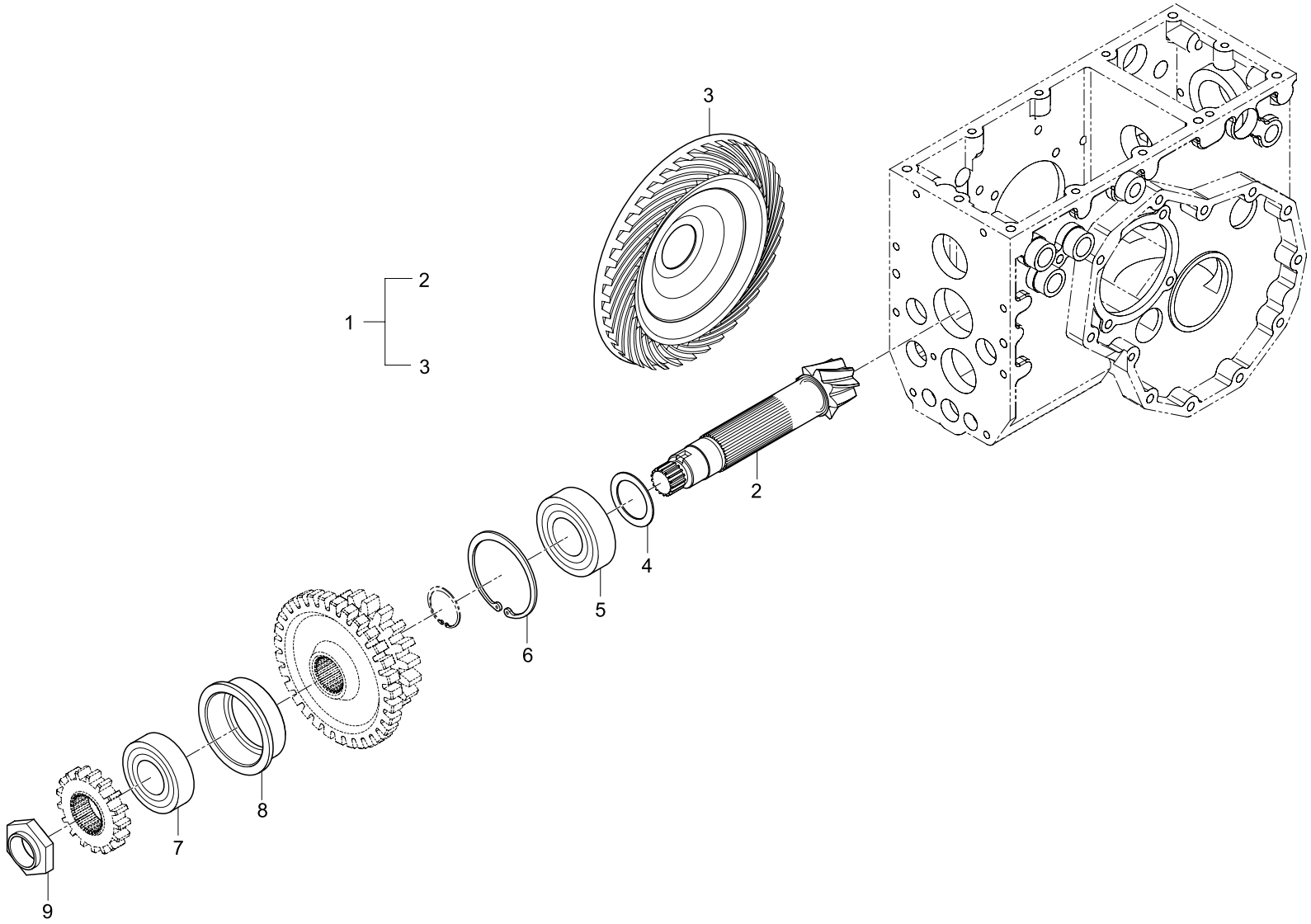

REF. NO	PART. NO	DESCRIPTION	Q'TY								I.C	REMARK
			CK20	CK20J	CK20H	CK20HJ	CK20-EU	CK20J-EU	CK20H-EU	CK20HJ-EU		
01	T2350-26112	SPIRAL BEVEL ASS'Y	1	1			1	1				
01	T2360-26112	SPIRAL BEVEL ASS'Y			1	1			1	1		
02	T2350-22112	PINION, SPIRAL BEVEL	1	1			1	1				
02	T2360-22112	PINION, SPIRAL BEVEL			1	1			1	1		
02	T2360-22113	PINION, SPIRAL BEVEL			1	1			1	1		
03	T2350-26122	GEAR, 37 SPIRAL BEVEL	1	1	1	1	1	1	1	1		
04	T2350-22051	COLLAR, ADJUSTING (t 0.6)	1	1	1	1	1	1	1	1		
04	T2350-22061	COLLAR, ADJUSTING (t 0.8)	1	1	1	1	1	1	1	1		
04	T2350-22071	COLLAR, ADJUSTING (t 1.0)	1	1	1	1	1	1	1	1		
04	T2350-22081	COLLAR, ADJUSTING (t 1.2)	1	1	1	1	1	1	1	1		
04	T2350-22091	COLLAR, ADJUSTING (t 1.4)	1	1	1	1	1	1	1	1		
05	T2350-26131	BEARING, TAPER ROLLER	1	1	1	1	1	1	1	1		
06	04611-00580	RING, SNAP	1	1	1	1	1	1	1	1		
07	08711-30205	BEARING, TAPER ROLLER	1	1	1	1	1	1	1	1		
08	T2350-23821	CASE, BEARING	1	1	1	1	1	1	1	1		
09	T2350-25361	NUT, 24	1	1			1	1				
09	31220-2234-2	NUT, 24			1	1			1	1		

T260 FRONT WHEEL DRIVING GROUP

CK20,CK20J,CK20-EU,CK20J-EU

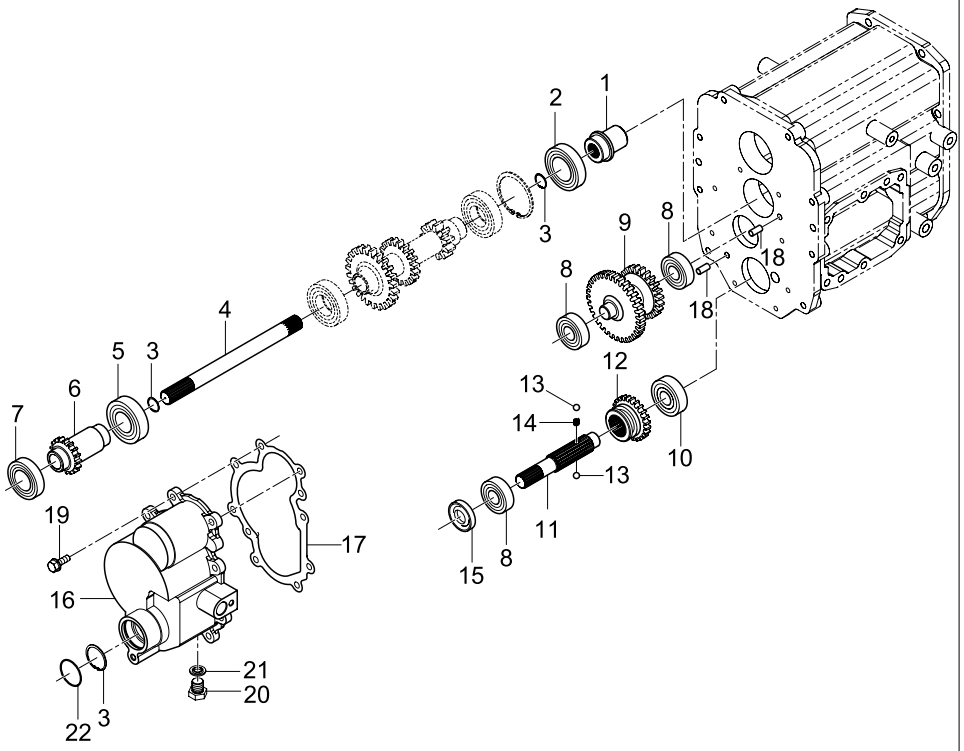

CK20H,CK20HJ,CK20H-EU,CK20HJ-EU

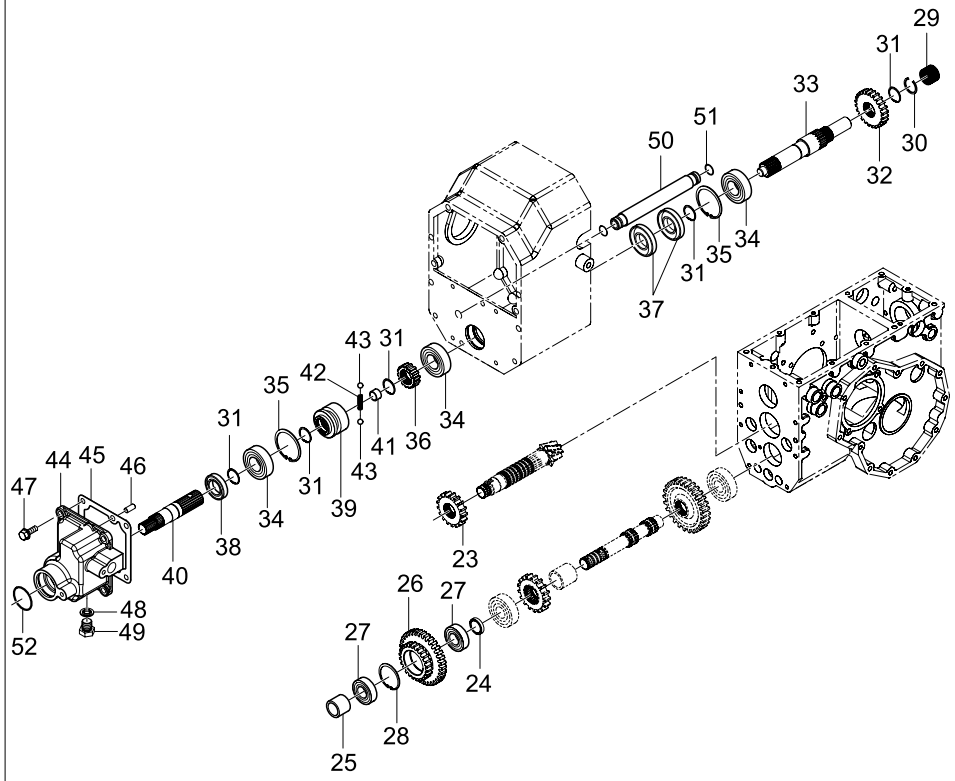

REF. NO	PART. NO	DESCRIPTION	Q'TY								I.C	REMARK
			CK20	CK20J	CK20H	CK20HJ	CK20-EU	CK20J-EU	CK20H-EU	CK20HJ-EU		
01	T2350-44591	COUPLING (FRONT WHEEL DRIVING)	1	1			1	1				
02	08101-06007	BEARING, BALL	1	1			1	1				
03	04612-00200	RING, SNAP	3	3			3	3				
04	T2350-44561	SHAFT 1, FRONT WHEEL DRIVING	1	1			1	1				
05	08101-06206	BEARING, BALL	1	1			1	1				
06	T2350-44521	GEAR, 18	1	1			1	1				
07	08101-06006	BEARING, BALL	1	1			1	1				
08	08101-06204	BEARING, BALL	3	3			3	3				
09	T2350-44181	GEAR, 28-38	1	1			1	1				
09	T2350-44182	GEAR, 28-38	1	1			1	1				
10	08101-06304	BEARING, BALL	1	1			1	1				
11	T2350-44191	SHAFT 2, FRONT WHEEL DRIVING	1	1			1	1				
12	T2350-44231	SHIFT, FRONT WHEEL DRIVING	1	1			1	1				
12	T2350-44232	SHIFT, FRONT WHEEL DRIVING	1	1			1	1				
13	07715-01605	BALL	2	2			2	2				
14	T2305-44252	SPRING (FRONT WHEEL DRIVING SHAFT)	1	1			1	1				
15	09500-20428	SEAL, OIL	1	1			1	1				
16	T2350-44112	CASE, FRONT WHEEL DRIVING	1	1			1	1				
16	T2350-44113	CASE, FRONT WHEEL DRIVING	1	1			1	1				
17	T2350-44122	PACKING (FRONT WHEEL DRIVING CASE)	1	1			1	1				
18	05012-00818	PIN, STRAIGHT	2	2			2	2				
19	01123-50825	BOLT	8	8			8	8				
20	06331-35010	PLUG	1	1			1	1				
21	04717-01000	WASHER, SEAL	1	1			1	1				
22	04811-06420	O-RING	1	1			1	1				

REF. NO	PART. NO	DESCRIPTION	Q'TY								I.C	REMARK
			CK20	CK20J	CK20H	CK20HJ	CK20-EU	CK20J-EU	CK20H-EU	CK20HJ-EU		
23	T2360-44521	GEAR, 20			1	1			1	1		
24	T2360-23651	SPACER (RANGE CHANGE)			1	1			1	1		
25	T2360-23681	SPACER 2 (RANGE)			1	1			1	1		
26	T2360-44181	GEAR, 23-25			1	1			1	1		
27	08101-06004	BEARING, BALL			2	2			2	2		
28	04611-00420	RING, SNAP			1	1			1	1		
29	T2360-44271	BEARING, NEEDLE			1	1			1	1		
30	T2360-44591	RING, SNAP(FRONT WHEEL DRIVING SHAFT 1)			1	1			1	1		
31	04612-00250	RING, SNAP			5	5			5	5		
32	T2360-44171	GEAR, 23 (FRONT WHEEL)			1	1			1	1		
33	T2360-44562	SHAFT 1, FRONT WHEEL DRIVING			1	1			1	1		
34	08101-06205	BEARING, BALL			3	3			3	3		
35	04611-00520	RING, SNAP			2	2			2	2		
36	T2360-44241	BOSS, SPLINE (FRONT WHEEL)			1	1			1	1		
37	09500-25528	SEAL, OIL			2	2			2	2		
38	09500-25428	SEAL, OIL			1	1			1	1		
39	T2360-44231	SHIFT, FRONT WHEEL			1	1			1	1		
40	T2360-44191	SHAFT 2, FRONT WHEEL DRIVING			1	1			1	1		
41	08511-01410	BUSHING, DU			1	1			1	1		
42	T2305-44252	SPRING (FRONT WHEEL DRIVING SHAFT)			1	1			1	1		
43	07715-01605	BALL			2	2			2	2		
44	T2360-44112	CASE, FRONT WHEEL DRIVING			1	1			1	1		
44	T2360-44113	CASE, FRONT WHEEL DRIVING			1	1			1	1		
45	T2360-44121	PACKING (FRONT WHEEL DRIVING CASE)			1	1			1	1		
46	05012-00818	PIN, STRAIGHT			2	2			2	2		

REF. NO	PART. NO	DESCRIPTION	Q'TY								I.C	REMARK
			CK20	CK20J	CK20H	CK20HJ	CK20-EU	CK20J-EU	CK20H-EU	CK20HJ-EU		
47	01123-50825	BOLT			4	4			4	4		
48	04717-01000	WASHER, SEAL			1	1			1	1		
49	06331-35010	PLUG			1	1			1	1		
50	T2360-21162	TUBE, OIL			1	1			1	1		
51	04811-00150	O-RING			2	2			2	2		
52	04811-06420	O-RING			1	1			1	1		

T270 MAIN SHIFT FORK GROUP

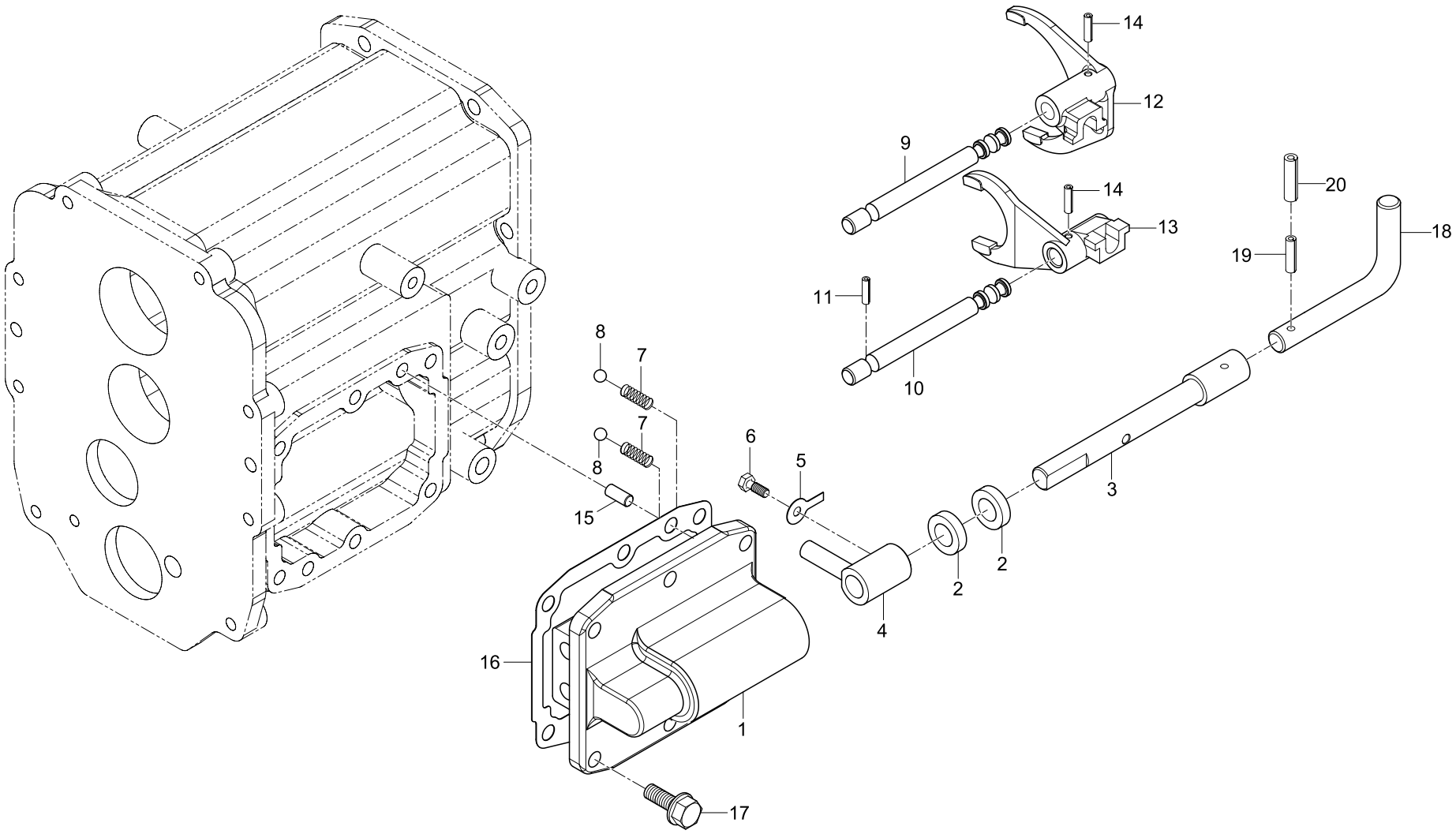

REF. NO	PART. NO	DESCRIPTION	Q'TY								I.C	REMARK
			CK20	CK20J	CK20H	CK20HJ	CK20-EU	CK20J-EU	CK20H-EU	CK20HJ-EU		
01	T2350-21212	COVER, SHIFT (MAIN SHIFT)	1	1			1	1				
01	T2350-21213	COVER, SHIFT (MAIN SHIFT)	1	1			1	1				
02	09500-16287	SEAL, OIL	2	2			2	2				
03	T2350-21361	ROD, SHIFT (MAIN SHIFT)	1	1			1	1				
04	T2350-21351	ARM, SHIFT (MAIN SHIFT)	1	1			1	1				
05	04111-50060	WASHER	1	1			1	1				
06	T4620-21371	BOLT, LOCK	1	1			1	1				
07	62331-1853-2	SPRING	2	2			2	2				
08	07715-01605	BALL	2	2			2	2				
09	T2350-21541	ROD 1, FORK (MAIN SHIFT)	1	1			1	1				
10	T2350-21551	ROD 2, FORK (MAIN SHIFT)	1	1			1	1				
11	T2350-21281	PIN	1	1			1	1				
12	T2350-21242	FORK 1, SHIFT (MAIN SHIFT)	1	1			1	1				
13	T2350-21252	FORK 2, SHIFT (MAIN SHIFT)	1	1			1	1				
13	T2350-21253	FORK 2, SHIFT (MAIN SHIFT)	1	1			1	1				
14	05411-00420	PIN, SPRING	2	2			2	2				
14	05411-00425	PIN, SPRING	2	2			2	2				
15	05012-01018	PIN, STRAIGHT	2	2			2	2				
16	T2350-21222	PACKING	1	1			1	1				
17	01133-51028	BOLT	6	6			6	6				
18	T2350-21371	ROD 2, SHIFT (MAIN SHIFT)	1	1			1	1				
19	05411-00325	PIN, SPRING	1	1			1	1				
20	05411-00525	PIN, SPRING	1	1			1	1				

T280 MAIN SHIFT LEVER GROUP

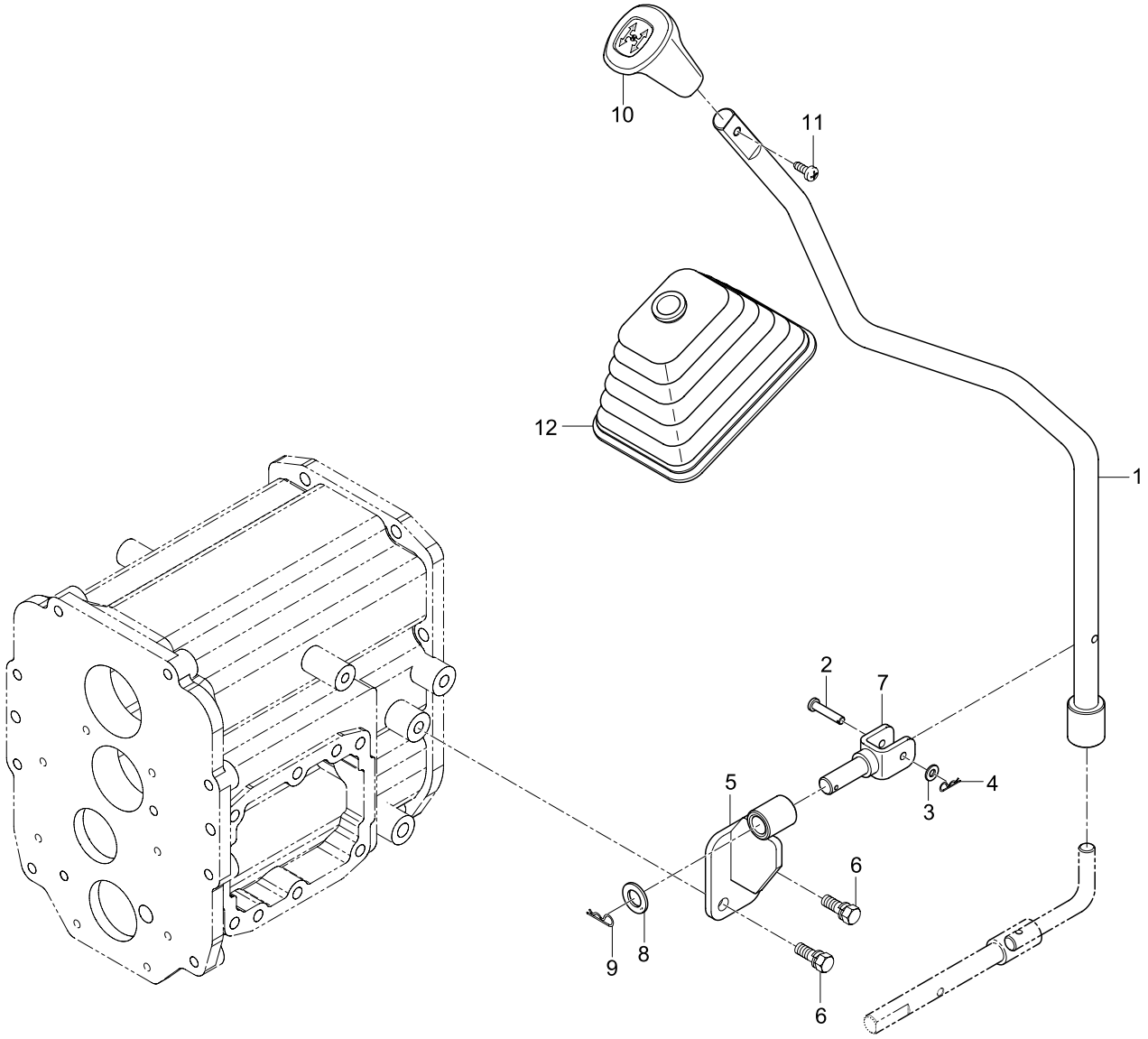

REF. NO	PART. NO	DESCRIPTION	Q'TY								I.C	REMARK
			CK20	CK20J	CK20H	CK20HJ	CK20-EU	CK20J-EU	CK20H-EU	CK20HJ-EU		
01	T2350-21312	LEVER, MAIN SHIFT	1	1			1	1				
02	05122-50635	PIN, JOINT	1	1			1	1				
03	04013-50060	WASHER, PLAIN	1	1			1	1				
04	05525-50600	PIN, SNAP	1	1			1	1				
05	T2350-21322	BRACKET, MAIN SHIFT	1	1			1	1				
06	01133-51020	BOLT	2	2			2	2				
07	T2350-21332	PIN, MAIN SHIFT	1	1			1	1				
08	04011-50140	WASHER, PLAIN	1	1			1	1				
09	05515-51600	PIN, SNAP	1	1			1	1				
10	T2350-21341	GRIP (MAIN SHIFT)	1	1			1	1				
11	03024-50516	SCREW	1	1			1	1				
12	T2350-60371	BOOT	1	1			1	1				

T290 RANGE SHIFT FORK GROUP

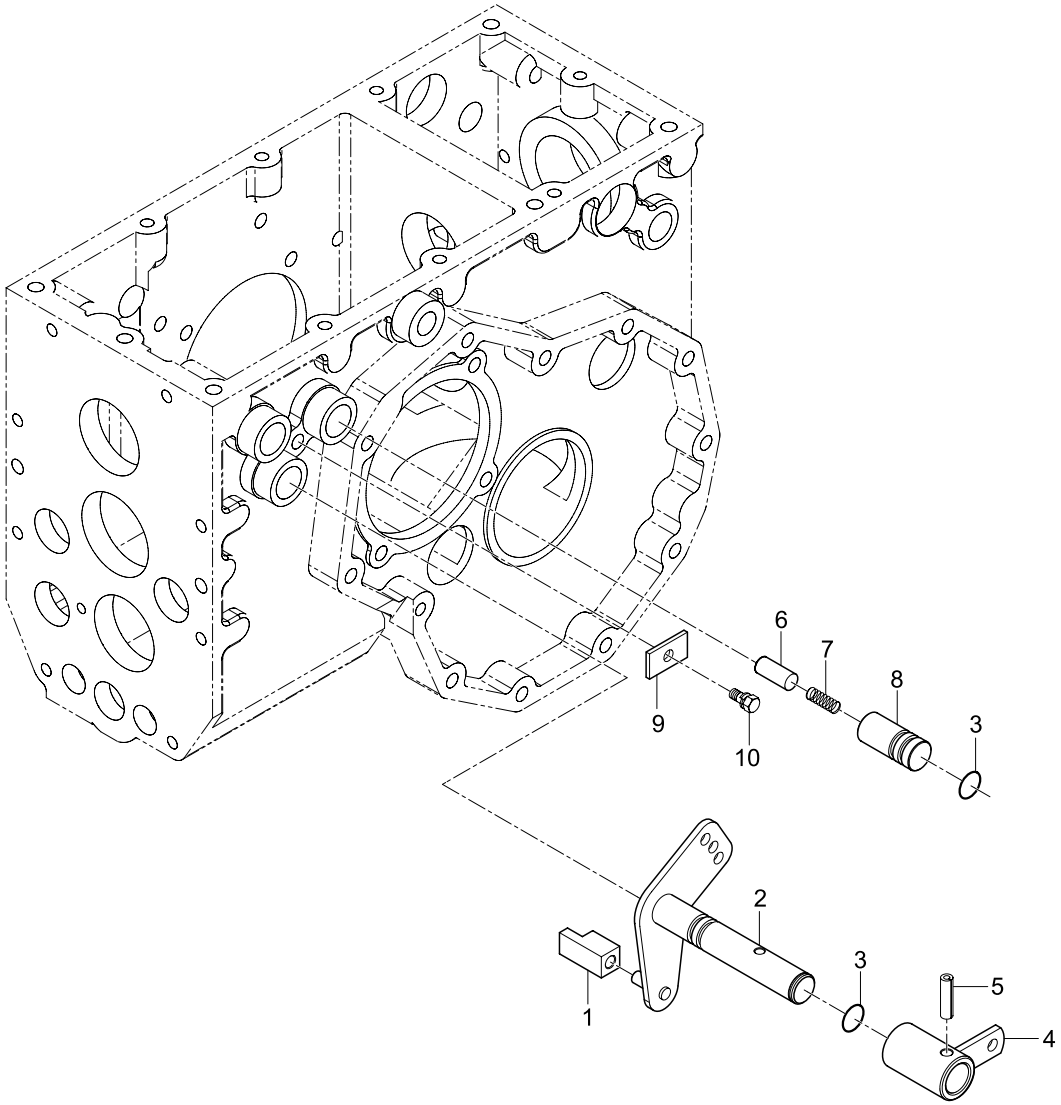

REF. NO	PART. NO	DESCRIPTION	Q'TY								I.C	REMARK
			CK20	CK20J	CK20H	CK20HJ	CK20-EU	CK20J-EU	CK20H-EU	CK20HJ-EU		
01	T2350-24361	SHIFT	1	1			1	1				
01	T2350-25832	SHIFT			1	1			1	1		
02	T2350-24311	ARM, RANGE SHIFT (HIGH-LOW)	1	1			1	1				
02	T2350-24312	ARM, RANGE SHIFT (HIGH-LOW)	1	1			1	1				
02	T2350-24313	ARM, RANGE SHIFT (HIGH-LOW)	1	1			1	1				
02	T2360-24311	ARM, RANGE SHIFT (HIGH-LOW)			1	1			1	1		
02	T2360-24312	ARM, RANGE SHIFT (HIGH-LOW)			1	1			1	1		
02	T2360-24313	ARM, RANGE SHIFT (HIGH-LOW)			1	1			1	1		
03	04811-00160	O-RING	2	2	2	2	2	2	2	2		
04	T2350-24321	ARM, RANGE SHIFT CONNECTING	1	1	1	1	1	1	1	1		
04	T2350-24322	ARM, RANGE SHIFT CONNECTING	1	1	1	1	1	1	1	1		
05	05411-00630	PIN, SPRING	1	1	1	1	1	1	1	1		
06	T2305-24151	PIN	1	1	1	1	1	1	1	1		
07	T2305-18531	SPRING	1	1	1	1	1	1	1	1		
08	T2350-24301	BOSS (RANGE SHIFT)	1	1			1	1				
08	T2360-24301	BOSS (RANGE SHIFT)			1	1			1	1		
09	T2350-23381	STOPPER	1	1	1	1	1	1	1	1		
10	01123-50816	BOLT	1	1	1	1	1	1	1	1		

T300 RANGE SHIFT LEVER GROUP

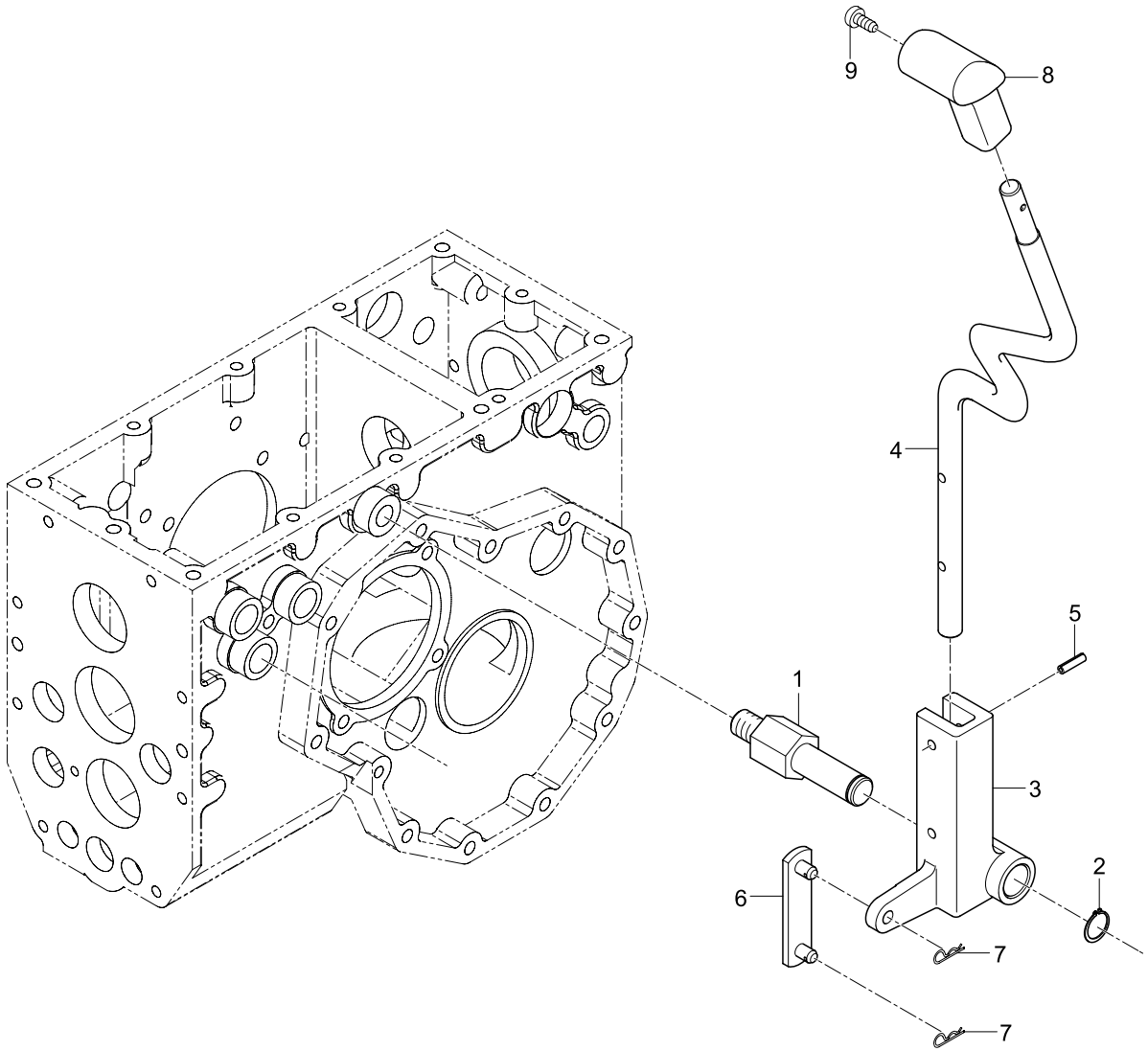

REF. NO	PART. NO	DESCRIPTION	Q'TY								I.C	REMARK
			CK20	CK20J	CK20H	CK20HJ	CK20-EU	CK20J-EU	CK20H-EU	CK20HJ-EU		
01	T2350-24342	SHAFT (RANGE SHIFT)	1	1	1	1	1	1	1	1		
02	04612-00180	RING, SNAP	1	1	1	1	1	1	1	1		
03	T2350-24351	BRACKET, RANGE SHIFT	1	1	1	1	1	1	1	1		
03	T2350-24352	BRACKET, RANGE SHIFT	1	1	1	1	1	1	1	1		
04	T2350-60432	LEVER, RANGE SHIFT	1	1	1	1	1	1	1	1		
04	T2350-60433	LEVER, RANGE SHIFT	1	1	1	1	1	1	1	1		
04	T2350-60434	LEVER, RANGE SHIFT	1	1	1	1	1	1	1	1		
05	05411-00632	PIN, SPRING	2	2	2	2	2	2	2	2		
06	T2350-24332	PLATE, CONNECTOR (RANGE SHIFT)	1	1	1	1	1	1	1	1		
07	05525-50800	PIN, SNAP	2	2	2	2	2	2	2	2		
08	T2350-60441	GRIP (RANGE SHIFT)	1	1	1	1	1	1	1	1		
08	T2350-60442	GRIP (RANGE SHIFT)	1	1	1	1	1	1	1	1		
09	03024-50514	SCREW	1	1	1	1	1	1	1	1		

T310 HST GROUP

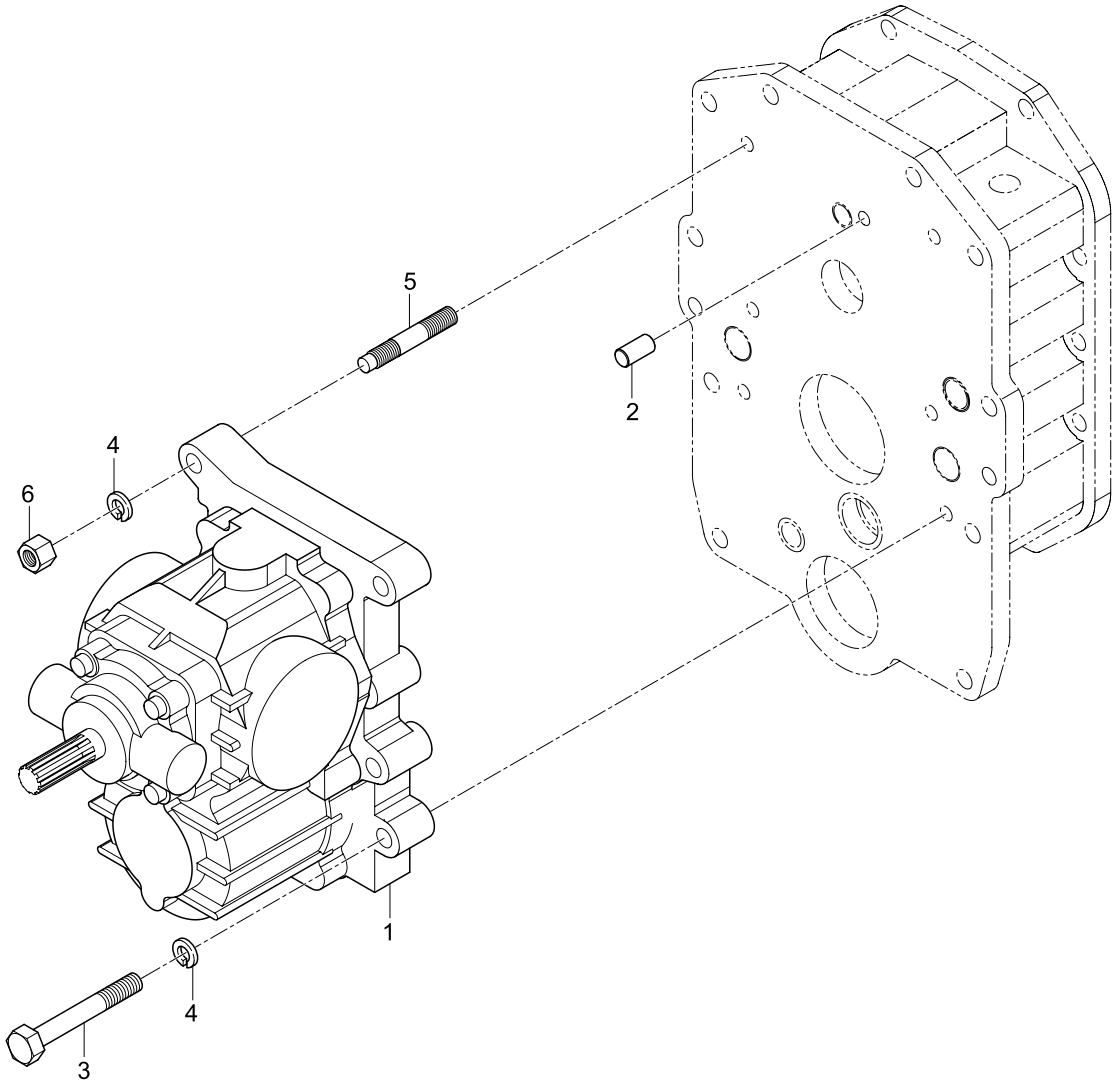

REF. NO	PART. NO	DESCRIPTION	Q'TY								I.C	REMARK
			CK20	CK20J	CK20H	CK20HJ	CK20-EU	CK20J-EU	CK20H-EU	CK20HJ-EU		
01	T2360-30011	HST ASS'Y			1	1			1	1	◄	
01	T2360-30012	HST ASS'Y			1	1			1	1	◄	2004.12.01~
02	05012-00816	PIN, STRAIGHT			1	1			1	1		
03	01173-51060	BOLT			4	4			4	4		
04	04512-50100	WASHER, SPRING			6	6			6	6		
05	01517-51055	STUD			2	2			2	2		
06	02176-50100	NUT			2	2			2	2		

T311 HST PART GROUP

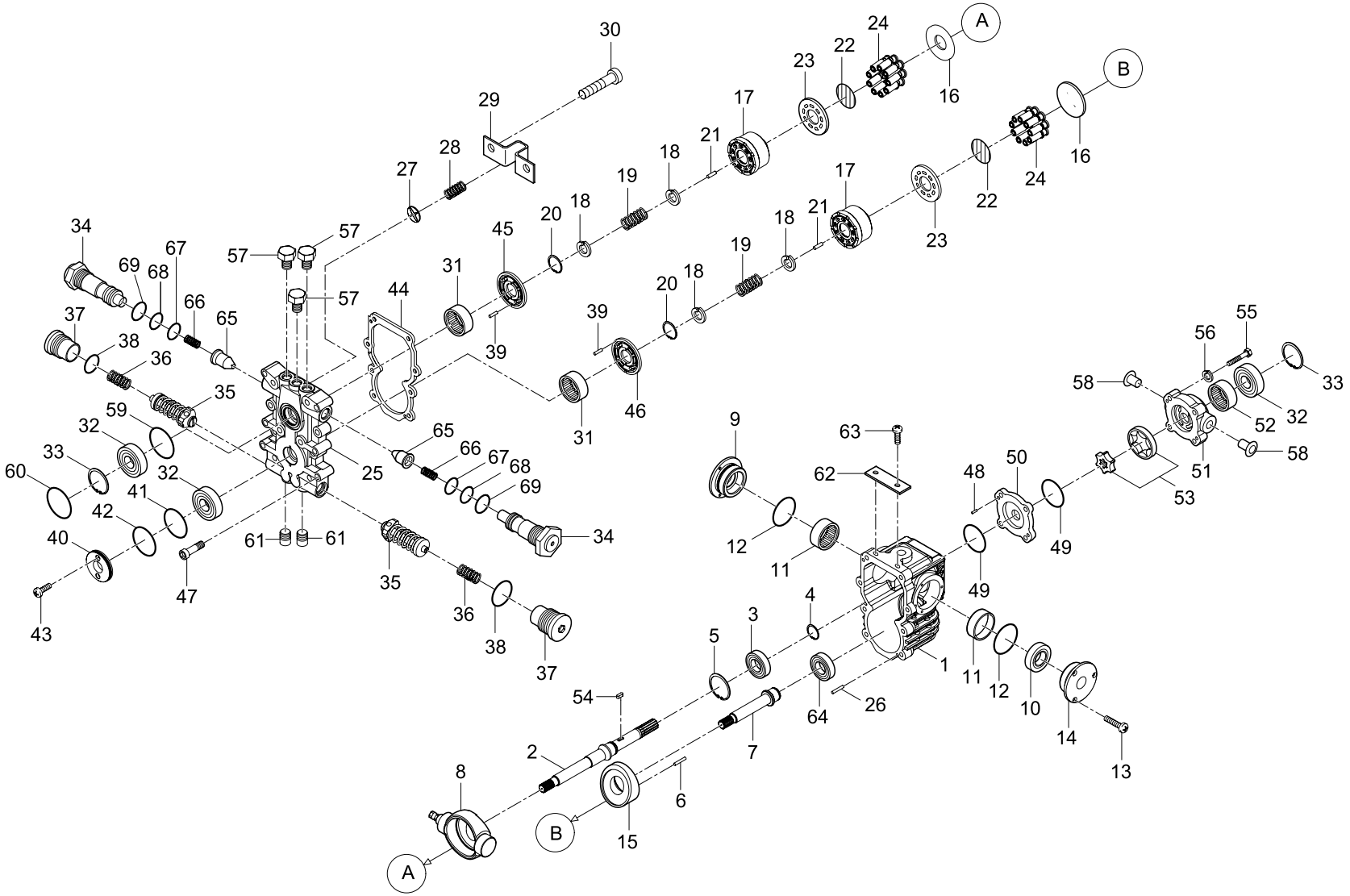

REF. NO	PART. NO	DESCRIPTION	Q'TY								I.C	REMARK
			CK20	CK20J	CK20H	CK20HJ	CK20-EU	CK20J-EU	CK20H-EU	CK20HJ-EU		
01	JA1C1001	BODY			1	1			1	1		
02	JA1C1002	SHAFT (PUMP)			1	1			1	1	※	
02	JA1C1018	SHAFT (PUMP)			1	1			1	1		
03	BB6205	BEARING			1	1			1	1		
04	SR25CS	RING, SNAP			1	1			1	1		
05	SR52CH	RING, SNAP			1	1			1	1		
06	P20000P1	PIN			1	1			1	1		
07	JA1C1003	SHAFT (MOTOR)			1	1			1	1		
08	JA1C1004	PLATE, SWASH (PUMP)			1	1			1	1		
09	JA1C1005	COVER, SWASH (LEVER)			1	1			1	1		
10	OSAP0997	SEAL, OIL			1	1			1	1		
11	DX404415	BEARING, DX			2	2			2	2		
12	G0055	O-RING			2	2			2	2		
13	MBM0510	SCREW			6	6			6	6		
14	JA1C1006	COVER (B), SWASH			1	1			1	1		
15	JA1C1007	PLATE, SWASH (MOTOR)			1	1			1	1		
16	J99J2007	PLATE, SHOE			2	2			2	2		
17	J99J2008	BLOCK, CYLINDER			2	2			2	2		
18	J99J2009	SEAT, SPRING			4	4			4	4		
19	J99J2010	SPRING			2	2			2	2		
20	IR28CH	RING, SNAP			2	2			2	2		
21	J99J2011	PIN, SPACE			6	6			6	6		
22	J99J2012	GUIDE, BALL			2	2			2	2		
23	J99J2013	PLATE, SET			2	2			2	2		
24	J99J2014	PISTON ASS'Y			18	18			18	18		

REF. NO	PART. NO	DESCRIPTION	Q'TY								I.C	REMARK
			CK20	CK20J	CK20H	CK20HJ	CK20-EU	CK20J-EU	CK20H-EU	CK20HJ-EU		
25	JA1C1008	COVER, REAR			1	1			1	1		
26	P10000P3	PIN			2	2			2	2		
27	J93E2014	CHECK			1	1			1	1		
28	J93E2015	SPRING			1	1			1	1	※	
28	J93E2019	SPRING			1	1			1	1		
29	J93E2016	HOLDER, SPRING			2	2			2	2		
30	WBM0610	BOLT, WRENCH			2	2			2	2		
31	NBTA2025Z	BEARING, NEEDLE			2	2			2	2		
32	OSAP1013	SEAL, OIL			3	3			3	3		
33	SR35CH	RING, SNAP			2	2			2	2		
34	JA1C1009	NEUTRAL VALVE ASS'Y			2	2			2	2		
35	J96G1030-A	RELIEF VALVE ASS'Y			2	2			2	2		
36	J96G1036	SPRING			2	2			2	2		
37	J96G1031	PLUG			2	2			2	2		
38	P0018	O-RING			2	2			2	2		
39	P10000PA	PIN			2	2			2	2		
40	JA1C1010	COVER			1	1			1	1		
41	A0034	O-RING			1	1			1	1		
42	A0035	O-RING			1	1			1	1		
43	SDM0515	BOLT			8	8			8	8		
44	JA1C1011	GASKET			2	2			2	2		
45	J99J2016	PLATE, VALVE (PUMP)			2	2			2	2		
46	JA1C1012	PLATE, VALVE (MOTOR)			1	1			1	1		
47	WBM1030	BOLT, WRENCH			1	1			1	1		
48	P10000P6	PIN			1	1			1	1		

REF. NO	PART. NO	DESCRIPTION	Q'TY								I.C	REMARK
			CK20	CK20J	CK20H	CK20HJ	CK20-EU	CK20J-EU	CK20H-EU	CK20HJ-EU		
49	A0149	O-RING			1	1			1	1		
50	JA1C1013	PLATE			1	1			1	1		
51	JA1C1014	CASING			1	1			1	1	※	
51	JA1C1019	CASING			1	1			1	1		
52	NBTA2015Z	BEARING, NEEDLE			1	1			1	1		
53	JA1C1015	GEROTOR			1	1			1	1	※	
53	JA1C1020	GEROTOR			1	1			1	1		
54	K030306	KEY			1	1			1	1	※	
54	K10000K7	KEY			1	1			1	1		
55	WBM0835	BOLT, WRENCH			4	4			4	4		
56	WAS08	WASHER, SPRING			4	4			4	4		
57	JA1C1016	PLUG			3	3			3	3		
58	PP1815	PLUG			3	3			3	3		
59	PO 014	O-RING			4	4			4	4		
60	PO 045	O-RING			1	1			1	1		
61	WPT38	PLUG			2	2			2	2		
62	JA1C017	PLATE, NAME			1	1			1	1		
63	RVT175	RIVET			2	2			2	2		
64	BB6205C3	BEARING			1	1			1	1		
65	JA1C1009-6	CHECK			1	1			1	1		
66	JA1C1009-5	SPRING			1	1			1	1		
67	PO 014	O-RING			1	1			1	1		
68	BURP014	BURP014			1	1			1	1		
69	P0018	O-RING			1	1			1	1		

T320 HST CONTROL 1 GROUP

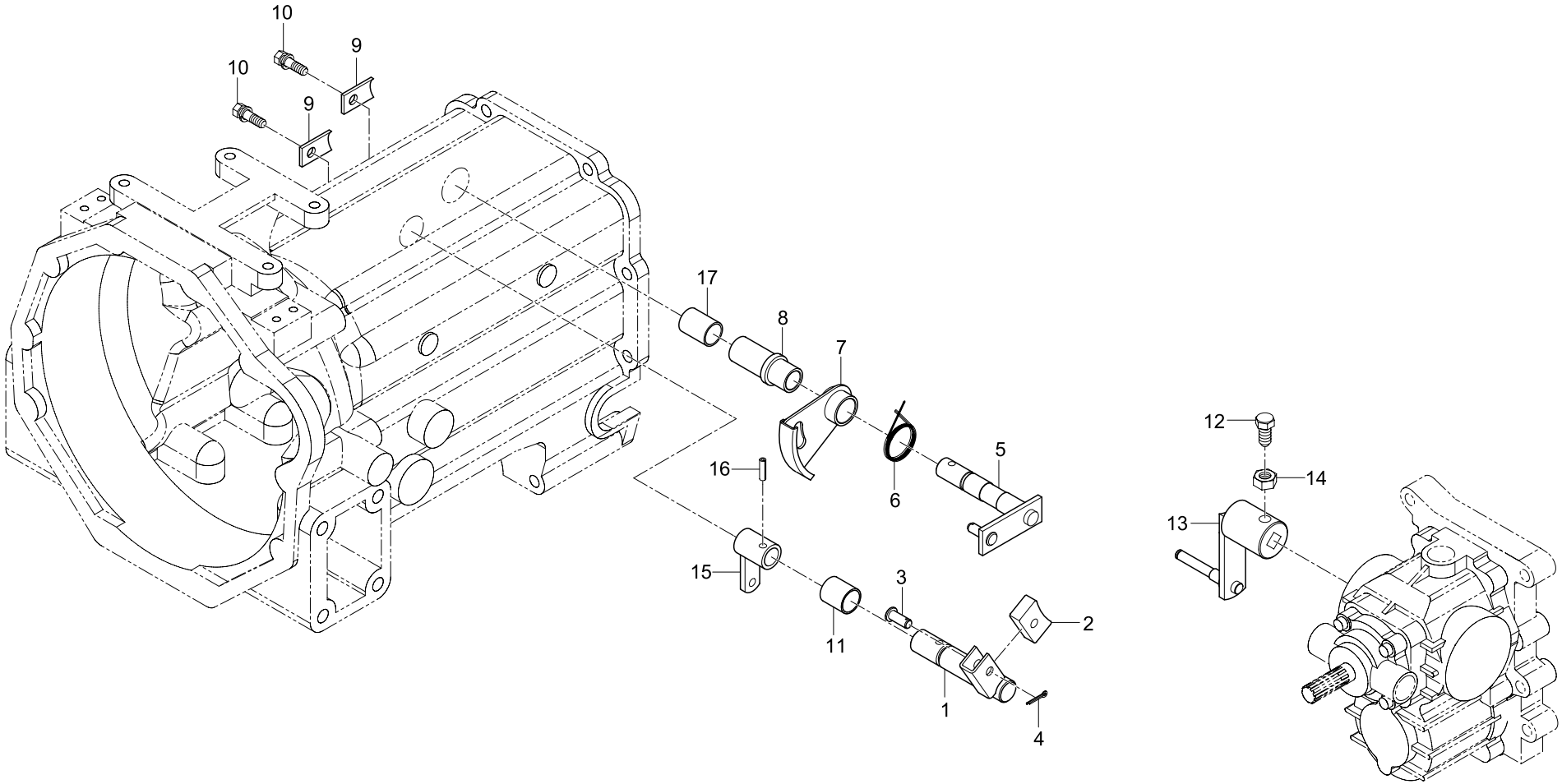

REF. NO	PART. NO	DESCRIPTION	Q'TY								I.C	REMARK
			CK20	CK20J	CK20H	CK20HJ	CK20-EU	CK20J-EU	CK20H-EU	CK20HJ-EU		
01	T2360-32221	SHAFT, LOCK			1	1			1	1		
					~3195-00120	~D196-00200			~D051-00120	~D051-00120		
01	T2195-32222	SHAFT, LOCK			1	1			1	1		
					D195-00001~	D196-00201~			D051-00121~	D051-00121~		
02	T2360-32211	SHOE, LOCK			1	1			1	1		
					~3195-00120	~D196-00200			~D051-00120	~D051-00120		
02	T2195-32212	SHOE, LOCK			1	1			1	1		
					D195-00001~	D196-00201~			D051-00121~	D051-00121~		
03	05122-50822	PIN, JOINT			1	1			1	1		
					~3195-00120	~D196-00200			~D051-00120	~D051-00120		
03	05122-50825	PIN, JOINT			1	1			1	1		
					D195-00001~	D196-00201~			D051-00121~	D051-00121~		
04	05511-50215	PIN, SPLIT			1	1			1	1		
05	T2360-32151	LEVER 2, CONNECTING			1	1			1	1		
					~3195-00120	~D196-00200			~D051-00120	~D051-00120		
05	T2195-32153	LEVER 2, CONNECTING			1	1			1	1		
					D195-00001~	D196-00201~			D051-00121~	D051-00121~		
06	T2360-32251	SPRING 1			1	1			1	1		
07	T2360-32172	ARM, STOPPER			1	1			1	1		
					~3195-00120	~D196-00200			~D051-00120	~D051-00120		
07	T2195-32172	ARM, STOPPER			1	1			1	1		
					D195-00001~	D196-00201~			D051-00121~	D051-00121~		
08	T2360-32162	SPACER			1	1			1	1		
					~3195-00120	~D196-00200			~D051-00120	~D051-00120		
08	T2195-32163	SPACER			1	1			1	1		
					D195-00001~	D196-00201~			D051-00121~	D051-00121~		
09	T2360-32182	PLATE, STOPPER			2	2			2	2		
10	01123-50820	BOLT			2	2			2	2		
11	08511-02025	BUSHING			1	1			1	1		
11	T2305-14261	BUSHING			1	1			1	1		
12	T2360-32111	BOLT (HST LEVER STOPPER)			1	1			1	1		
13	T2360-32122	JOINT			1	1			1	1		
14	02116-50100	NUT			1	1			1	1		
15	T2360-32232	LEVER, CONNECTING			1	1			1	1		
16	05411-00628	PIN, SPRING			1	1			1	1		
16	05411-00635	PIN, SPRING			1	1			1	1		
17	08511-01715	BUSHING, DU			1	1			1	1		

T330 HST INNER HYDRAULIC LINE GROUP

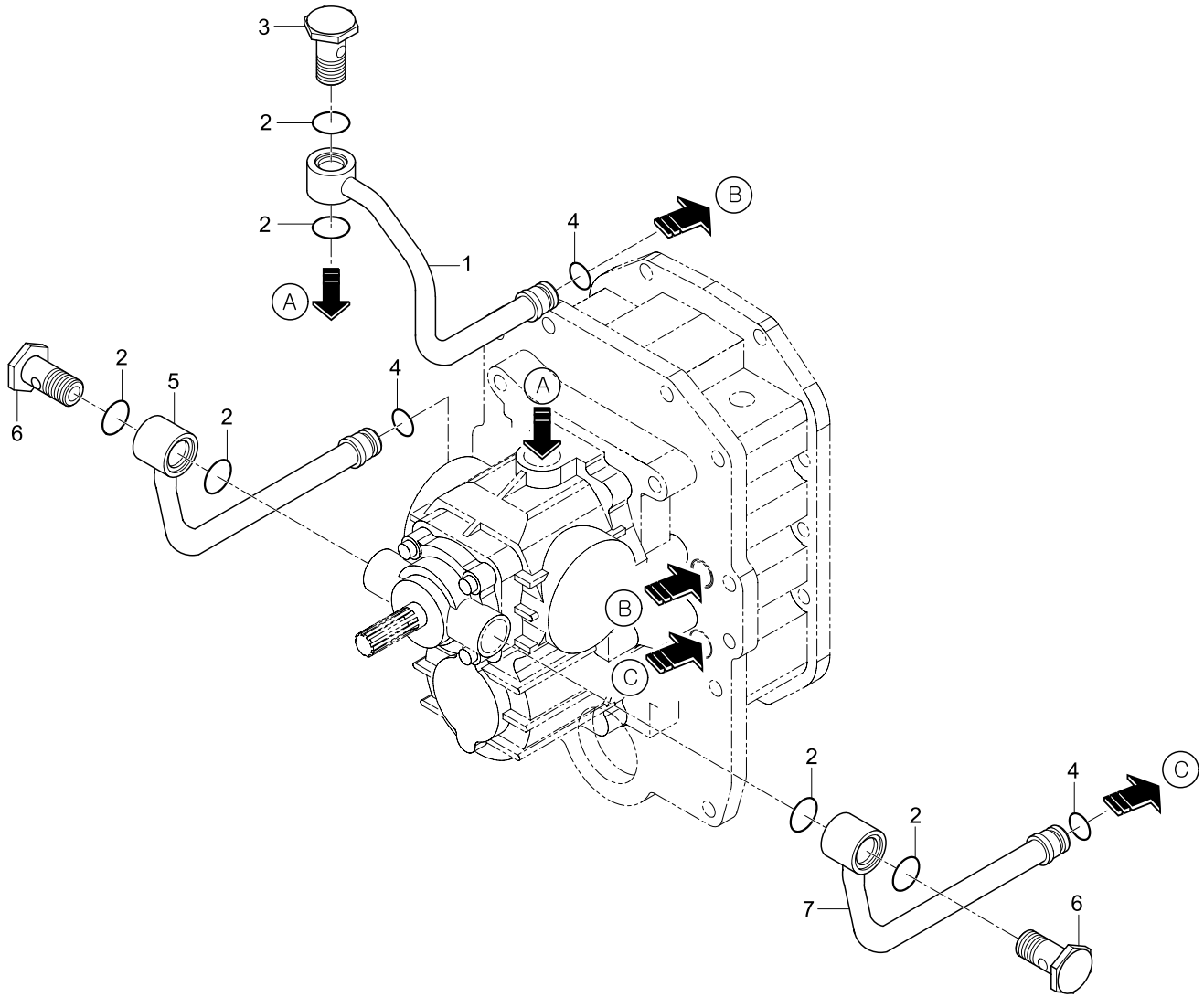

REF. NO	PART. NO	DESCRIPTION	Q'TY								I.C	REMARK
			CK20	CK20J	CK20H	CK20HJ	CK20-EU	CK20J-EU	CK20H-EU	CK20HJ-EU		
01	T2360-37051	TUBE 1, HST RETURN			1	1			1	1		
02	04810-00200	O-RING			6	6			6	6		
03	T2360-37091	BOLT, JOINT			1	1			1	1		
04	04810-00140	O-RING			3	3			3	3		
05	T2360-37061	TUBE 2, HST RETURN			1	1			1	1		
06	T2360-37101	BOLT, JOINT			2	2			2	2		
07	T2360-37071	TUBE 3, HST RETURN			1	1			1	1		

T340 PTO & MID PTO FORK GROUP

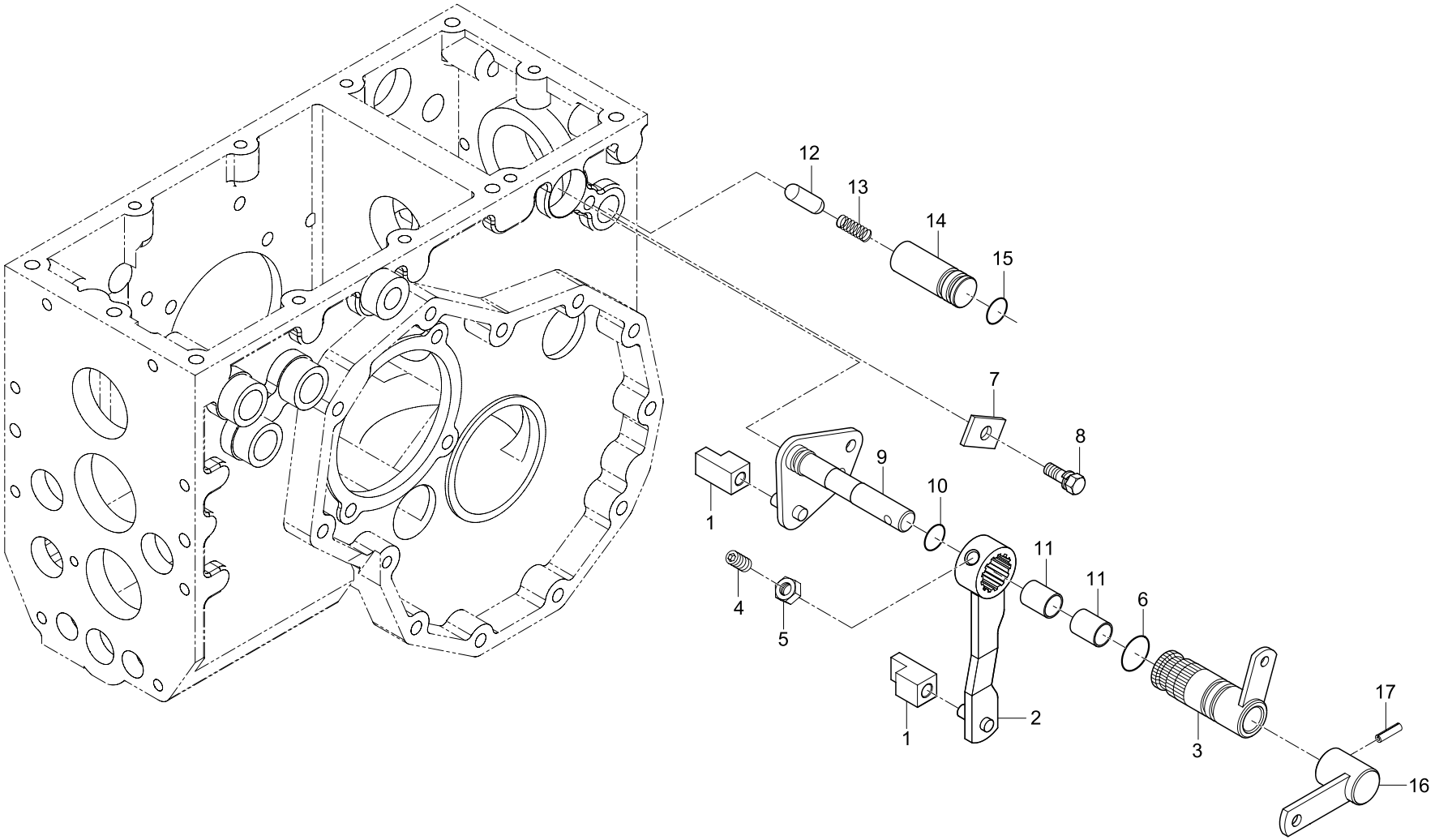

REF. NO	PART. NO	DESCRIPTION	Q'TY								I.C	REMARK
			CK20	CK20J	CK20H	CK20HJ	CK20-EU	CK20J-EU	CK20H-EU	CK20HJ-EU		
01	T2350-25832	SHIFT	2	2	2	2	2	2	2	2		
02	T2350-25841	SHIFT (PTO)	1	1	1	1	1	1	1	1		
03	T2350-25852	ARM, SHIFT (PTO)	1	1	1	1	1	1	1	1		
03	T2350-25853	ARM, SHIFT (PTO)	1	1	1	1	1	1	1	1		
04	03653-50815	BOLT, SET	1	1	1	1	1	1	1	1		
05	02114-50080	NUT	1	1	1	1	1	1	1	1		
06	04811-00210	O-RING	1	1	1	1	1	1	1	1		
07	T2350-23391	STOPPER 2	1	1	1	1	1	1	1	1		
08	01123-50816	BOLT	1	1	1	1	1	1	1	1		
09	T2350-24231	ARM, SHIFT (MID PTO)	1	1	1	1	1	1	1	1		
10	04811-00120	O-RING	1	1	1	1	1	1	1	1		
11	08511-01420	BUSHING	2	2	2	2	2	2	2	2		
12	T2305-24151	PIN	1	1	1	1	1	1	1	1		
13	T2305-18531	SPRING	1	1	1	1	1	1	1	1		
14	T2350-24131	BOSS (MID PTO)	1	1	1	1	1	1	1	1		
14	T2350-24132	BOSS (MID PTO)	1	1	1	1	1	1	1	1		
15	04811-00160	O-RING	1	1	1	1	1	1	1	1		
16	T2350-24522	LEVER 1 (MID PTO)	1	1	1	1	1	1	1	1		
17	05411-00625	PIN, SPRING	1	1	1	1	1	1	1	1		

T350 PTO & MID PTO LEVER GROUP

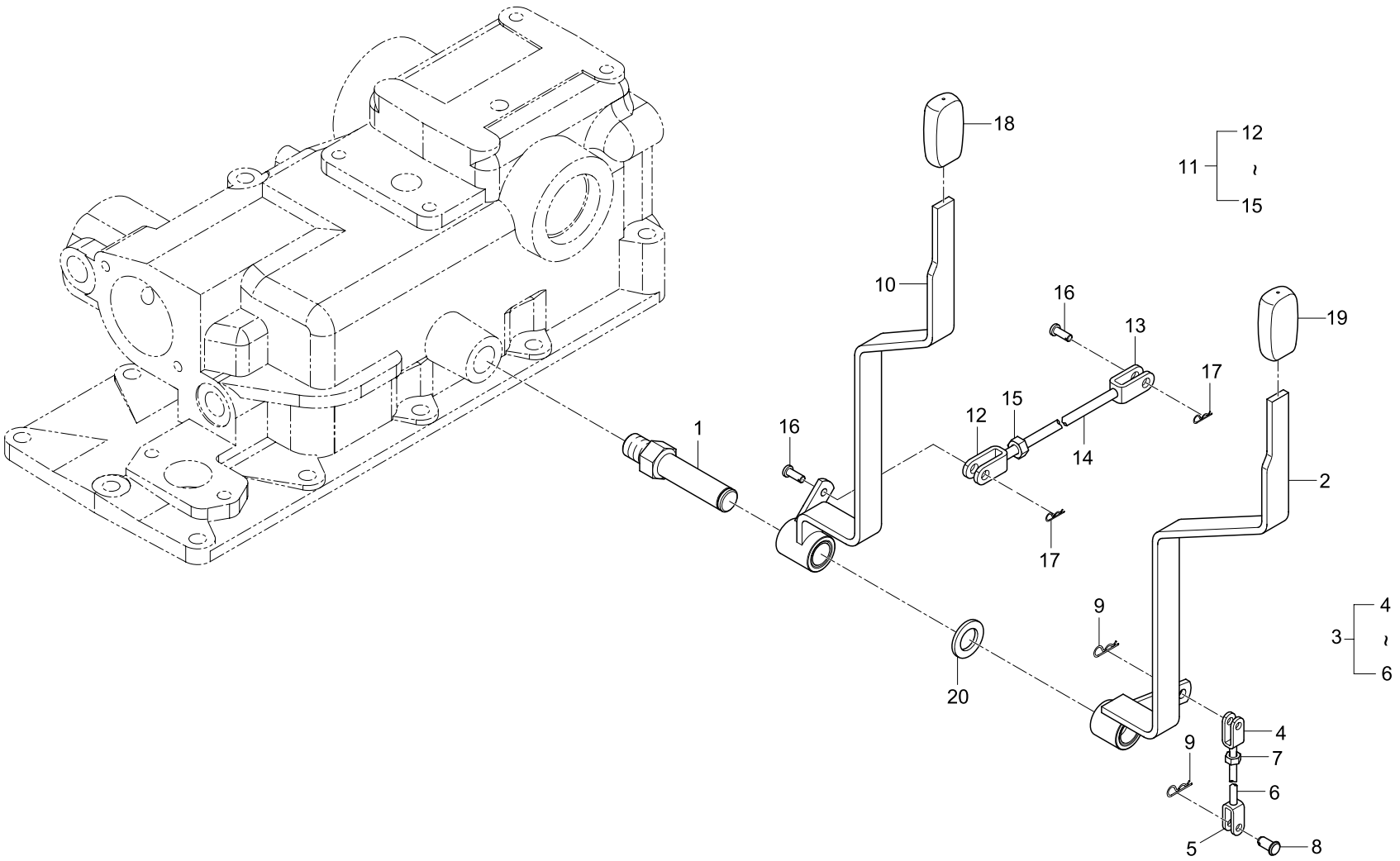

REF. NO	PART. NO	DESCRIPTION	Q'TY								I.C	REMARK
			CK20	CK20J	CK20H	CK20HJ	CK20-EU	CK20J-EU	CK20H-EU	CK20HJ-EU		
01	T2350-24282	SHAFT (MID PTO)	1	1	1	1	1	1	1	1		
02	T2350-24273	LEVER (MID PTO)	1	1	1	1	1	1	1	1		
03	T2350-24262	PLATE, CONNECTOR (MID PTO)	1	1	1	1	1	1	1	1		
04	T2350-25891001	ROD 1	1	1	1	1	1	1	1	1		
05	T2350-24262002	ROD 2	1	1	1	1	1	1	1	1		
06	T2350-24262003	BAR	1	1	1	1	1	1	1	1		
07	02114-50080	NUT	2	2	2	2	2	2	2	2		
08	05122-50822	PIN, JOINT	2	2	2	2	2	2	2	2		
09	05525-50800	PIN, SNAP	2	2	2	2	2	2	2	2		
10	T2350-25862	LEVER (PTO)	1	1	1	1	1	1	1	1		
10	T2350-25863	LEVER (PTO)	1	1	1	1	1	1	1	1		
11	T2350-25891	ROD, CONNECTOR (PTO)	1	1	1	1	1	1	1	1		
12	T2350-25891001	ROD 1	1	1	1	1	1	1	1	1		
13	T2350-25891002	ROD 2	1	1	1	1	1	1	1	1		
14	T2350-25891003	BAR	1	1	1	1	1	1	1	1		
15	02114-50080	NUT	2	2	2	2	2	2	2	2		
16	05122-50822	PIN, JOINT	2	2	2	2	2	2	2	2		
17	05525-50800	PIN, SNAP	2	2	2	2	2	2	2	2		
18	T2350-25871	GRIP A (PTO)	1	1	1	1	1	1	1	1		
19	T2350-24251	GRIP B (MID PTO)	1	1	1	1	1	1	1	1		
20	04011-50200	WASHER, PLAIN	1	1	1	1	1	1	1	1		

T360 FRONT WHEEL DRIVING FORK GROUP

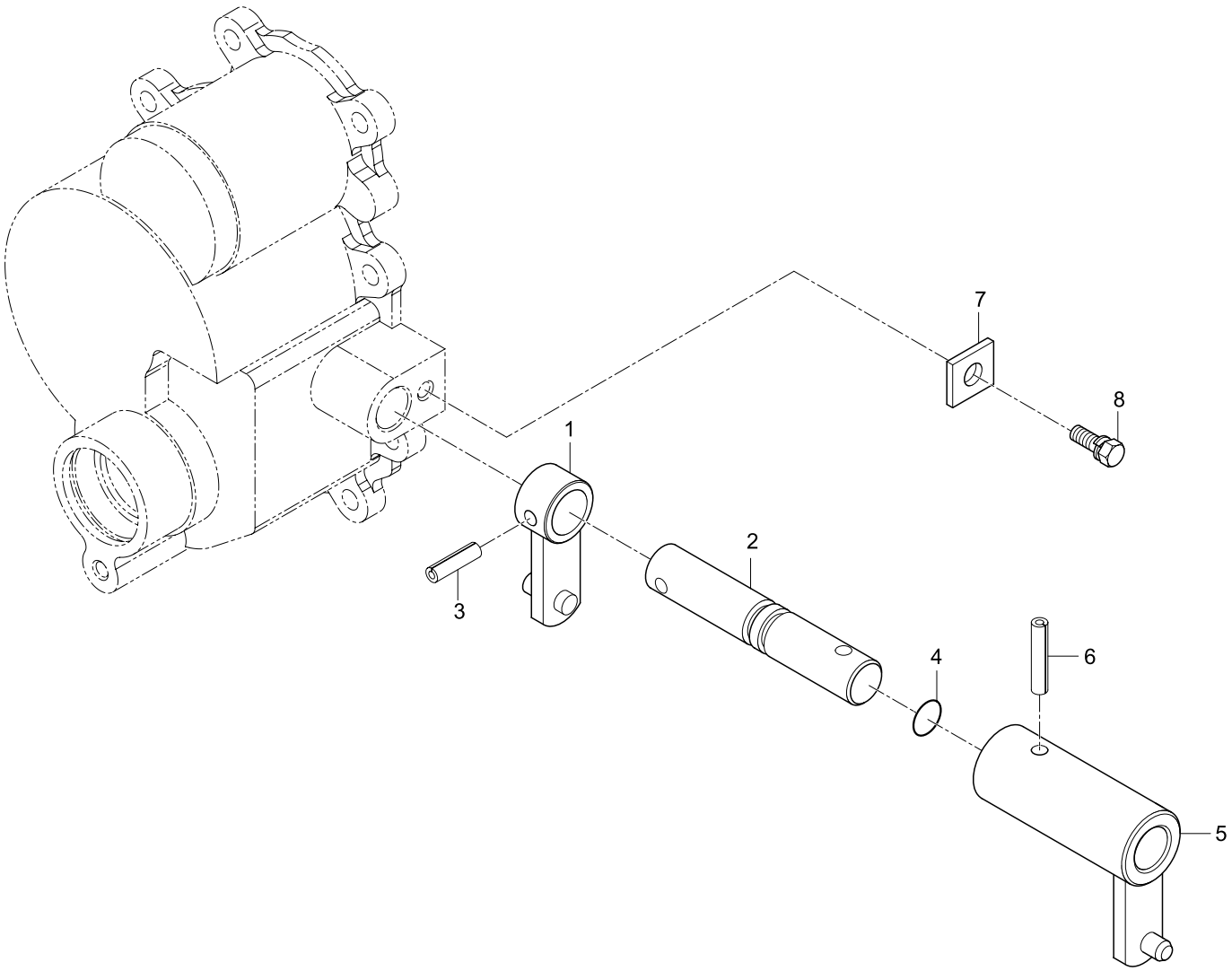

REF. NO	PART. NO	DESCRIPTION	Q'TY								I.C	REMARK
			CK20	CK20J	CK20H	CK20HJ	CK20-EU	CK20J-EU	CK20H-EU	CK20HJ-EU		
01	T2350-44311	ARM, FRONT WHEEL DRIVING	1	1	1	1	1	1	1	1		
02	T2350-44321	SHAFT, FRONT WHEEL DRIVING	1	1	1	1	1	1	1	1		
03	05411-00625	PIN, SPRING	1	1	1	1	1	1	1	1		
04	04811-00140	O-RING	1	1	1	1	1	1	1	1		
05	T2350-44332	ARM 2, FRONT WHEEL DRIVING	1	1	1	1	1	1	1	1		
05	T2350-44333	ARM 2, FRONT WHEEL DRIVING	1	1	1	1	1	1	1	1		
06	05411-00630	PIN, SPRING	1	1	1	1	1	1	1	1		
07	T2350-44351	STOPPER (FRONT WHEEL DRIVING)	1	1	1	1	1	1	1	1		
08	01123-50814	BOLT	1	1	1	1	1	1	1	1		

T370 FRONT WHEEL DRIVING LEVER GROUP

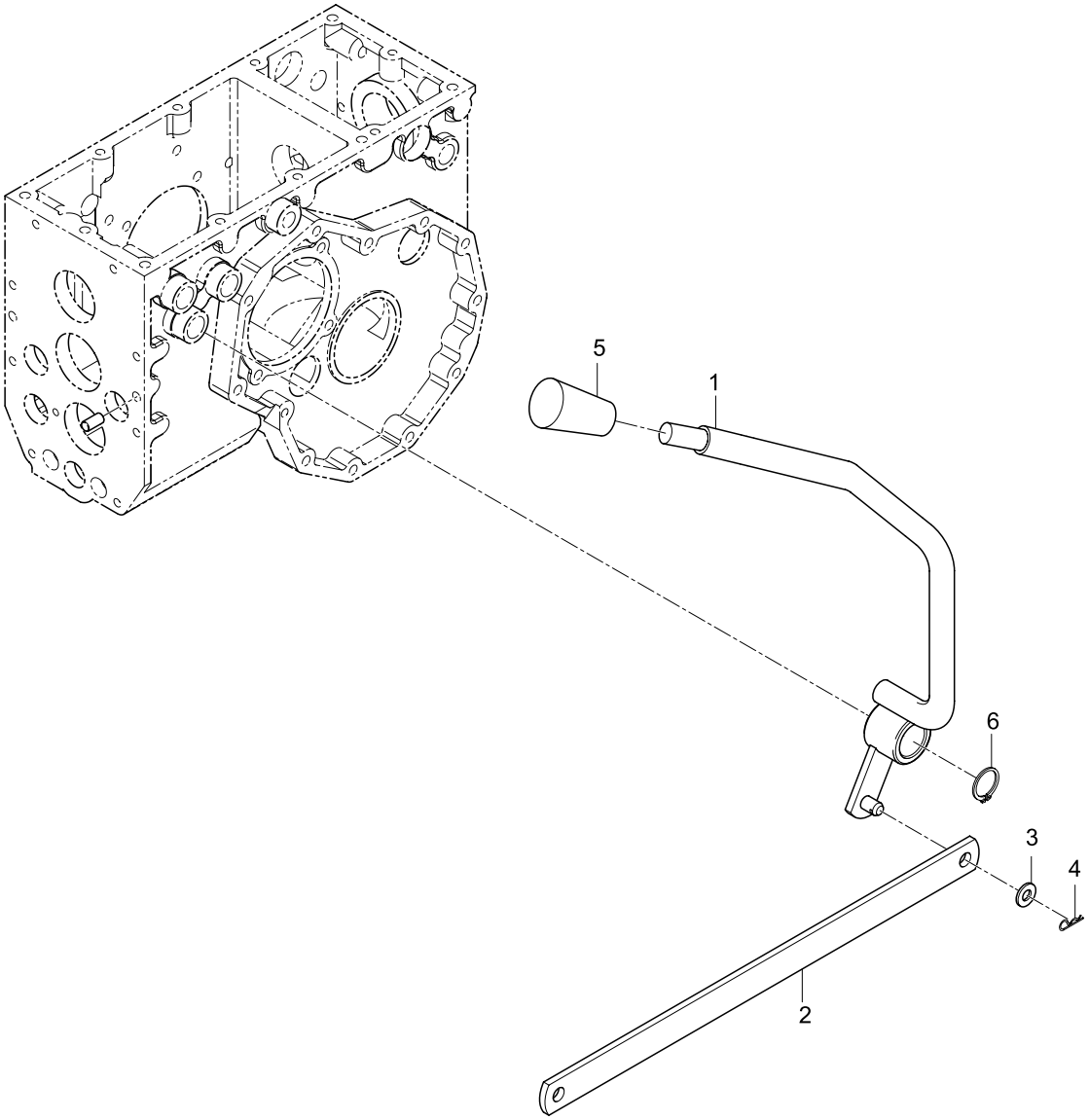

REF. NO	PART. NO	DESCRIPTION	Q'TY								I.C	REMARK
			CK20	CK20J	CK20H	CK20HJ	CK20-EU	CK20J-EU	CK20H-EU	CK20HJ-EU		
01	T2350-44362	LEVER, FRONT WHEEL DRIVING	1	1	1	1	1	1	1	1		
01	T2350-44363	LEVER, FRONT WHEEL DRIVING	1	1	1	1	1	1	1	1		
02	T2350-44342	ROD (FRONT WHEEL DRIVING)	1	1			1	1				
02	T2360-44342	ROD (FRONT WHEEL DRIVING)			1	1			1	1		
03	04013-50080	WASHER, PLAIN	2	2	2	2	2	2	2	2		
04	05525-50800	PIN, SNAP	2	2	2	2	2	2	2	2		
05	54201-2327-3	GRIP (FRONT WHEEL DRIVING)	1	1	1	1	1	1	1	1		
06	04612-00120	RING, SNAP	1	1	1	1	1	1	1	1		Wrong Number
06	04612-00200	RING, SNAP	1	1	1	1	1	1	1	1		

T380 REAR DIFFERENTIAL SYSTEM GROUP

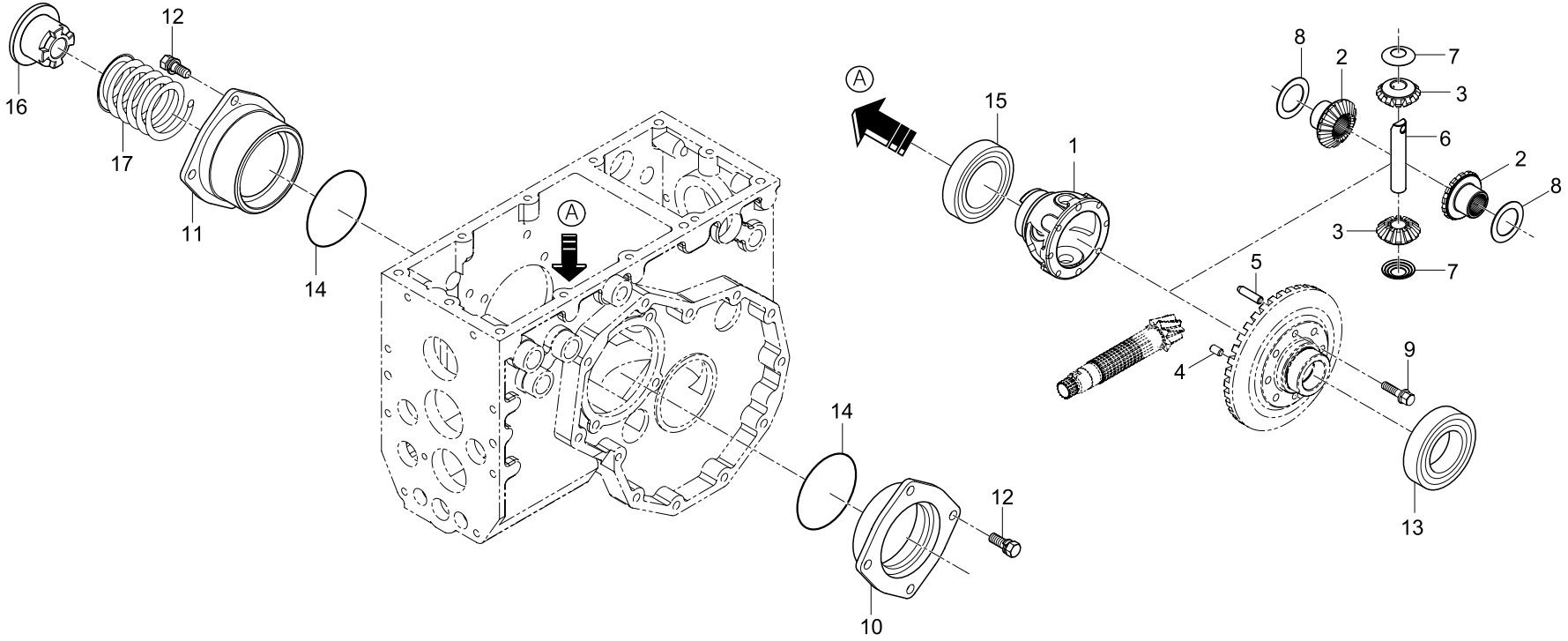

REF. NO	PART. NO	DESCRIPTION	Q'TY								I.C	REMARK
			CK20	CK20J	CK20H	CK20HJ	CK20-EU	CK20J-EU	CK20H-EU	CK20HJ-EU		
01	T2350-26511	CASE, REAR DIFFERENTIAL	1	1	1	1	1	1	1	1		
02	T4682-43141	GEAR, DIFFERENTIAL SIDE	2	2	2	2	2	2	2	2		
03	T4682-43131	PINION, DIFFERENTIAL	2	2	2	2	2	2	2	2		
04	T4520-43181	PIN, STRAIGHT	1	1	1	1	1	1	1	1		
05	T4520-43171	PIN, STRAIGHT	1	1	1	1	1	1	1	1		
06	T4520-43111	SHAFT, DIFFERENTIAL PINION	1	1	1	1	1	1	1	1		
07	T4520-43151	WASHER, DIFFERENTIAL PINION	2	2	2	2	2	2	2	2		
08	T4520-43071	SHIM (t 0.8)	2	2	2	2	2	2	2	2		
08	T4520-43081	SHIM (t 1.0)	2	2	2	2	2	2	2	2		
08	T4520-43091	SHIM (t 1.2)	2	2	2	2	2	2	2	2		
09	T4520-43162	BOLT, UBS	6	6	6	6	6	6	6	6		
10	T2350-26551	CASE, DIFFERENTIAL BEARING (LH)	1	1	1	1	1	1	1	1		
11	T2350-26561	CASE, DIFFERENTIAL BEARING (RH)	1	1	1	1	1	1	1	1		
12	01133-51025	BOLT	8	8	8	8	8	8	8	8		
13	08101-06210	BEARING, BALL	1	1	1	1	1	1	1	1		
14	T2305-26161	SHIM (t 0.1)	2	2	2	2	2	2	2	2		
14	T2305-26171	SHIM (t 0.2)	2	2	2	2	2	2	2	2		
14	T2305-26181	SHIM (t 0.4)	2	2	2	2	2	2	2	2		
15	08101-06011	BEARING, BALL	1	1	1	1	1	1	1	1		
16	T2350-26611	CLUTCH, DIFFERENTIAL LOCK	1	1	1	1	1	1	1	1		
17	T2350-26692	SPRING (DIFFERENTIAL SYSTEM)	1	1	1	1	1	1	1	1		

T390 DIFFERENTIAL LOCK FORK GROUP

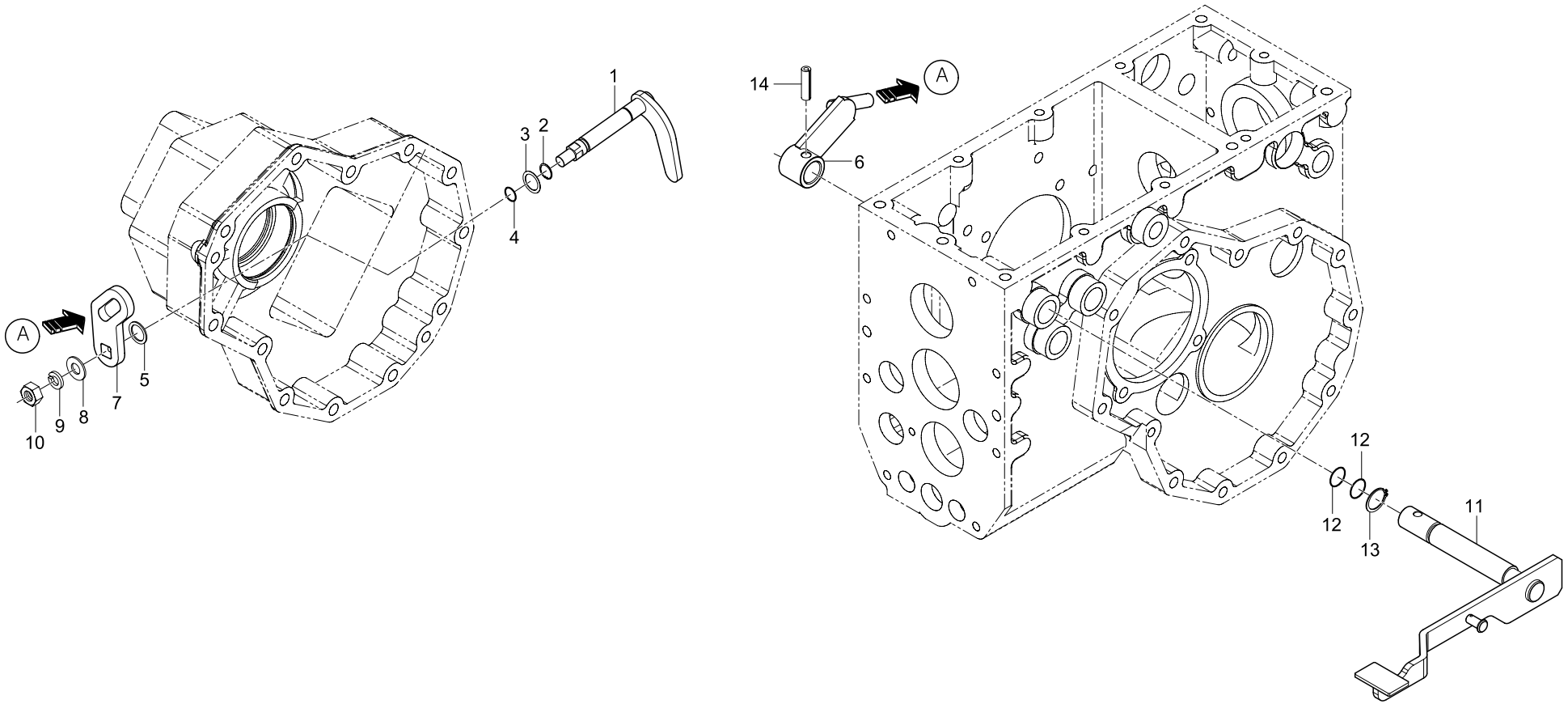

REF. NO	PART. NO	DESCRIPTION	Q'TY								I.C	REMARK
			CK20	CK20J	CK20H	CK20HJ	CK20-EU	CK20J-EU	CK20H-EU	CK20HJ-EU		
01	T2350-26672	FORK, DIFFERENTIAL LOCK	1	1	1	1	1	1	1	1		
02	04613-50120	RING, SNAP	1	1	1	1	1	1	1	1		
03	T2305-26521	SHIM (t 0.4)	1	1	1	1	1	1	1	1		
04	04811-00110	O-RING	1	1	1	1	1	1	1	1		
05	T2305-26531	SHIM (t 1.2)	1	1	1	1	1	1	1	1		
06	T2350-26631	ARM, DIFFERENTIAL LOCK	1	1	1	1	1	1	1	1		
07	T2350-26651	ARM 2, DIFFERENTIAL LOCK	1	1	1	1	1	1	1	1		
08	04013-50100	WASHER, PLAIN	1	1	1	1	1	1	1	1		
09	04512-50100	WASHER, SPRING	1	1	1	1	1	1	1	1		
10	02114-50100	NUT	1	1	1	1	1	1	1	1		
11	T2350-26642	PEDAL, DIFFERENTIAL LOCK	1	1	1	1	1	1	1	1		
12	04811-00160	O-RING	2	2	2	2	2	2	2	2		
13	04612-00200	RING, SNAP	1	1	1	1	1	1	1	1		
14	05411-00830	PIN, SPRING	1	1	1	1	1	1	1	1		

T400 BRAKE GROUP

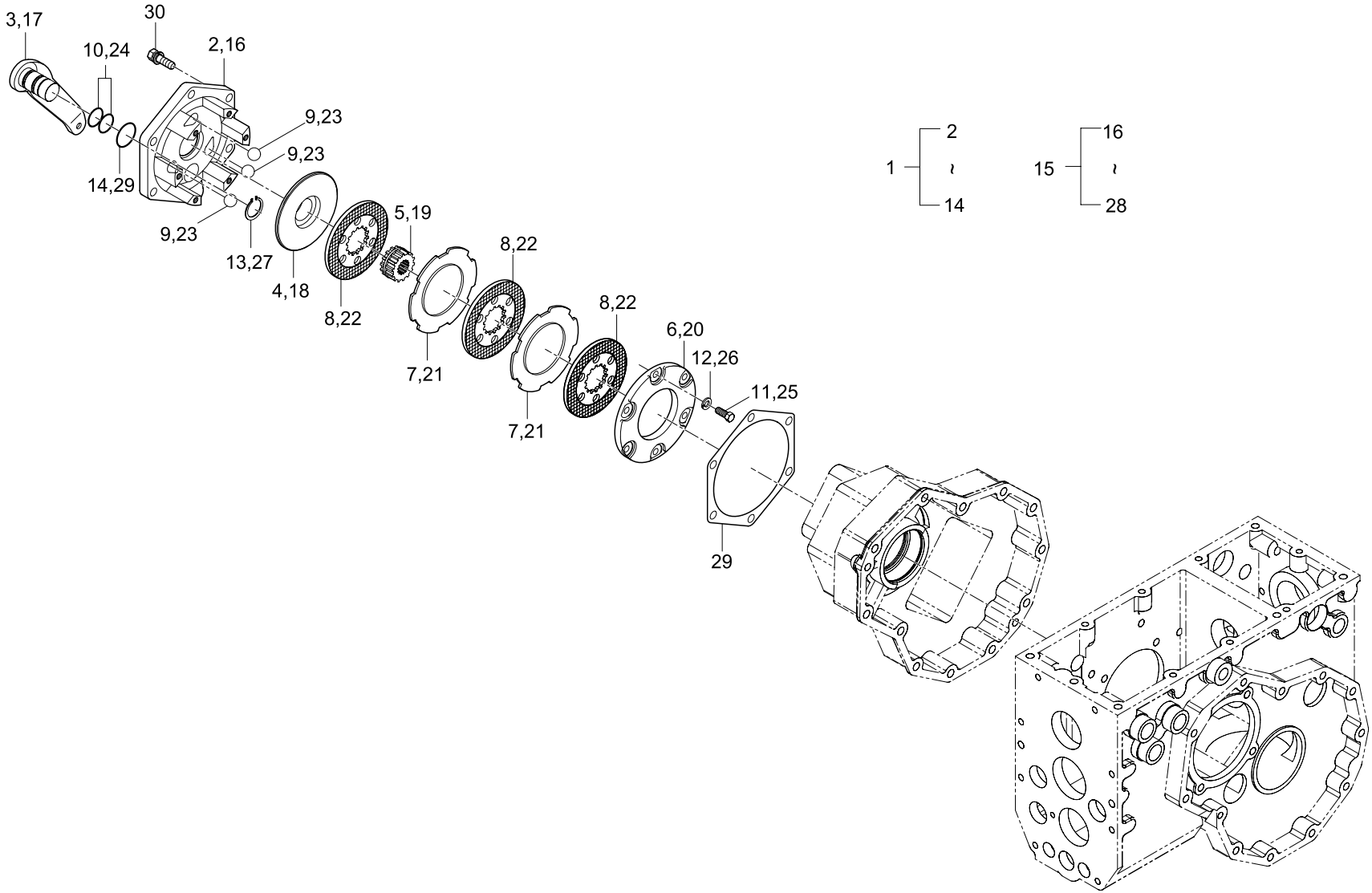

REF. NO	PART. NO	DESCRIPTION	Q'TY								I.C	REMARK
			CK20	CK20J	CK20H	CK20HJ	CK20J-AU	CK20HJ-AU	CK20H-EU	CK20H-NL		
01	T2350-28101	BRAKE ASS'Y (LH)	1	1	1	1	1	1	1	1		
02	T2350-28141	CASE, BRAKE (LH)	1	1	1	1	1	1	1	1		
03	T2305-28221	LEVER, BRAKE CAM (LH)	1	1	1	1	1	1	1	1		
04	T2305-28171	PLATE, CAM (LH)	1	1	1	1	1	1	1	1		
05	T2305-28191	HUB	1	1	1	1	1	1	1	1		
06	T2305-28241	COVER, BRAKE CASE	1	1	1	1	1	1	1	1		
07	T2305-28211	PLATE, BRAKE	2	2	2	2	2	2	2	2		
08	T2305-28201	DISK, BRAKE	3	3	3	3	3	3	3	3		
09	07715-00805	BALL, STEEL	3	3	3	3	3	3	3	3		
10	04811-00210	O-RING	2	2	2	2	2	2	2	2		
11	T2305-28051	BOLT	6	6	6	6	6	6	6	6		
12	04512-50080	WASHER, SPRING	6	6	6	6	6	6	6	6		
13	04612-00250	RING, SNAP	1	1	1	1	1	1	1	1		
14	04811-00250	O-RING	1	1	1	1	1	1	1	1		
15	T2350-28112	BRAKE ASS'Y (RH)	1	1	1	1	1	1	1	1		
16	T2350-28152	CASE, BRAKE (RH)	1	1	1	1	1	1	1	1		
17	T2350-28231	LEVER, BRAKE CAM (RH)	1	1	1	1	1	1	1	1		
18	T2305-28181	PLATE, CAM (RH)	1	1	1	1	1	1	1	1		
19	T2305-28191	HUB	1	1	1	1	1	1	1	1		
20	T2305-28241	COVER, BRAKE CASE	1	1	1	1	1	1	1	1		
21	T2305-28211	PLATE, BRAKE	2	2	2	2	2	2	2	2		
22	T2305-28201	DISK, BRAKE	3	3	3	3	3	3	3	3		
23	07715-00805	BALL, STEEL	3	3	3	3	3	3	3	3		
24	04811-00210	O-RING	2	2	2	2	2	2	2	2		
25	T2305-28051	BOLT	6	6	6	6	6	6	6	6		

REF. NO	PART. NO	DESCRIPTION	Q'TY								I.C	REMARK
			CK20	CK20J	CK20H	CK20HJ	CK20J-AU	CK20HJ-AU	CK20H-EU	CK20H-NL		
26	04512-50080	WASHER, SPRING	6	6	6	6	6	6	6	6		
27	04612-00250	RING, SNAP	1	1	1	1	1	1	1	1		
28	04811-00250	O-RING	1	1	1	1	1	1	1	1		
29	T2305-28162	PACKING	2	2	2	2	2	2	2	2		
30	01133-51030	BOLT	12	12	12	12	12	12	12	12		

T401 BRAKE GROUP

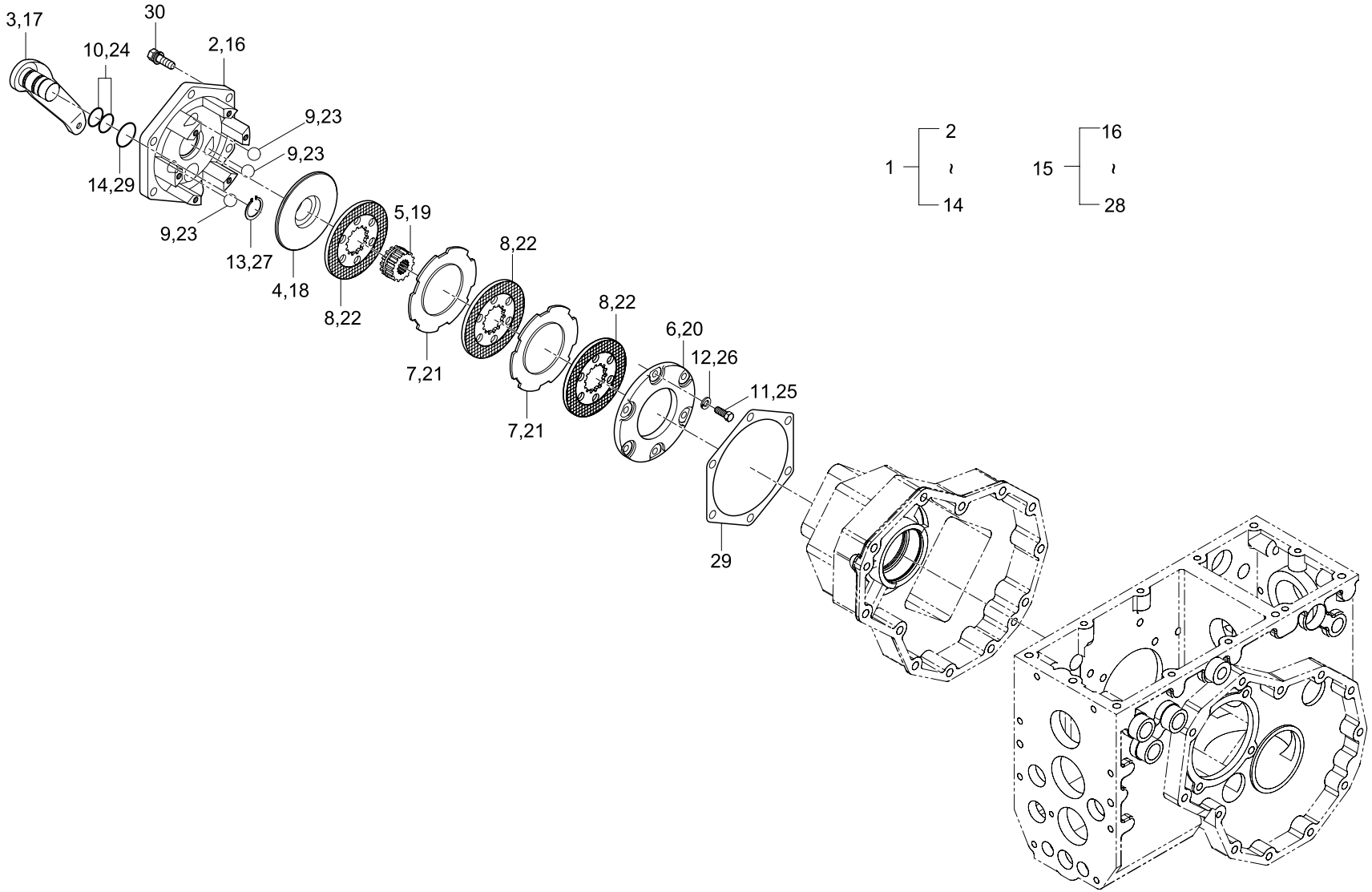

REF. NO	PART. NO	DESCRIPTION	Q'TY								I.C	REMARK
			CK20HJ-NL	CK20HJ-IT	CK20HJ-EN	CK20H-SP	CK20HJ-SP	CK20HJ-FR				
01	T2350-28101	BRAKE ASS'Y (LH)	1	1	1	1	1	1				
02	T2350-28141	CASE, BRAKE (LH)	1	1	1	1	1	1				
03	T2305-28221	LEVER, BRAKE CAM (LH)	1	1	1	1	1	1				
04	T2305-28171	PLATE, CAM (LH)	1	1	1	1	1	1				
05	T2305-28191	HUB	1	1	1	1	1	1				
06	T2305-28241	COVER, BRAKE CASE	1	1	1	1	1	1				
07	T2305-28211	PLATE, BRAKE	2	2	2	2	2	2				
08	T2305-28201	DISK, BRAKE	3	3	3	3	3	3				
09	07715-00805	BALL, STEEL	3	3	3	3	3	3				
10	04811-00210	O-RING	2	2	2	2	2	2				
11	T2305-28051	BOLT	6	6	6	6	6	6				
12	04512-50080	WASHER, SPRING	6	6	6	6	6	6				
13	04612-00250	RING, SNAP	1	1	1	1	1	1				
14	04811-00250	O-RING	1	1	1	1	1	1				
15	T2350-28112	BRAKE ASS'Y (RH)	1	1	1	1	1	1				
16	T2350-28152	CASE, BRAKE (RH)	1	1	1	1	1	1				
17	T2350-28231	LEVER, BRAKE CAM (RH)	1	1	1	1	1	1				
18	T2305-28181	PLATE, CAM (RH)	1	1	1	1	1	1				
19	T2305-28191	HUB	1	1	1	1	1	1				
20	T2305-28241	COVER, BRAKE CASE	1	1	1	1	1	1				
21	T2305-28211	PLATE, BRAKE	2	2	2	2	2	2				
22	T2305-28201	DISK, BRAKE	3	3	3	3	3	3				
23	07715-00805	BALL, STEEL	3	3	3	3	3	3				
24	04811-00210	O-RING	2	2	2	2	2	2				
25	T2305-28051	BOLT	6	6	6	6	6	6				

REF. NO	PART. NO	DESCRIPTION	Q'TY								I.C	REMARK
			CK20HJ-NL	CK20HJ-IT	CK20HJ-EN	CK20H-SP	CK20HJ-SP	CK20HJ-FR				
26	04512-50080	WASHER, SPRING	6	6	6	6	6	6				
27	04612-00250	RING, SNAP	1	1	1	1	1	1				
28	04811-00250	O-RING	1	1	1	1	1	1				
29	T2305-28162	PACKING	2	2	2	2	2	2				
30	01133-51030	BOLT	12	12	12	12	12	12				

T405 BRAKE GROUP

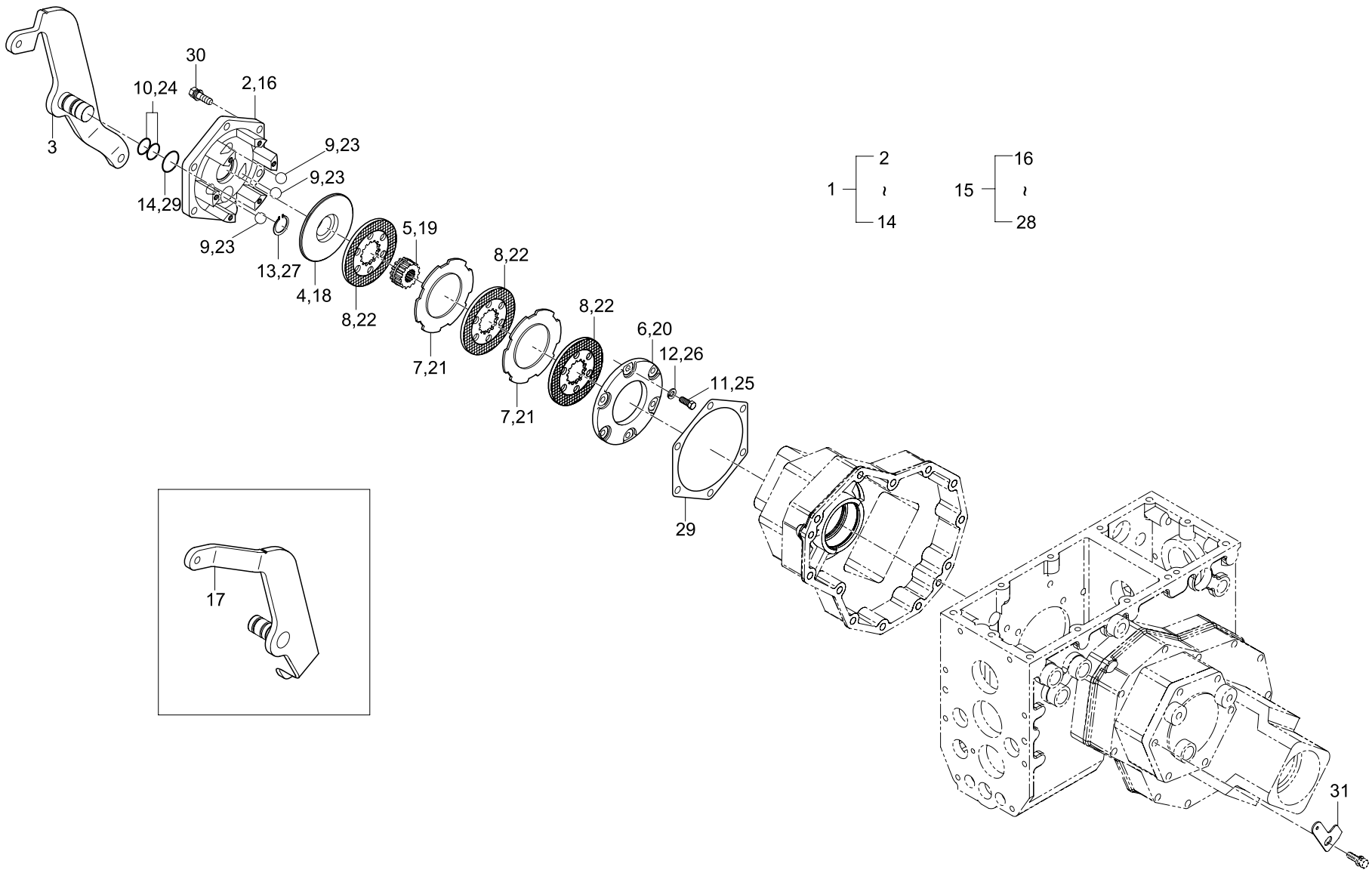

REF. NO	PART. NO	DESCRIPTION	Q'TY								I.C	REMARK
			CK20-EU	CK20-NL	CK20J-NL	CK20J-IT	CK20J-EN	CK20-SP	CK20J-SP	CK20J-FR		
01	T2351-28101	BRAKE ASS'Y (LH)	1	1	1	1	1	1	1	1		
01	T2351-28102	BRAKE ASS'Y (LH)	1	1	1	1	1	1	1	1		
02	T2350-28141	CASE, BRAKE (LH)	1	1	1	1	1	1	1	1		
03	T2351-28222	LEVER, BRAKE CAM (LH)	1	1	1	1	1	1	1	1		
03	T2351-28223	LEVER, BRAKE CAM (LH)	1	1	1	1	1	1	1	1		
04	T2305-28171	PLATE, CAM (LH)	1	1	1	1	1	1	1	1		
05	T2305-28191	HUB	1	1	1	1	1	1	1	1		
06	T2305-28241	COVER, BRAKE CASE	1	1	1	1	1	1	1	1		
07	T2305-28211	PLATE, BRAKE	2	2	2	2	2	2	2	2		
08	T2305-28201	DISK, BRAKE	3	3	3	3	3	3	3	3		
09	07715-00805	BALL, STEEL	3	3	3	3	3	3	3	3		
10	04811-00210	O-RING	2	2	2	2	2	2	2	2		
11	T2305-28051	BOLT	6	6	6	6	6	6	6	6		
12	04512-50080	WASHER, SPRING	6	6	6	6	6	6	6	6		
13	04612-00250	RING, SNAP	1	1	1	1	1	1	1	1		
14	04811-00250	O-RING	1	1	1	1	1	1	1	1		
15	T2351-28111	BRAKE ASS'Y (RH)	1	1	1	1	1	1	1	1		
15	T2351-28112	BRAKE ASS'Y (RH)	1	1	1	1	1	1	1	1		
16	T2350-28152	CASE, BRAKE (RH)	1	1	1	1	1	1	1	1		
17	T2351-28232	LEVER, BRAKE CAM (RH)	1	1	1	1	1	1	1	1		
17	T2351-28233	LEVER, BRAKE CAM (RH)	1	1	1	1	1	1	1	1		
18	T2305-28181	PLATE, CAM (RH)	1	1	1	1	1	1	1	1		
19	T2305-28191	HUB	1	1	1	1	1	1	1	1		
20	T2305-28241	COVER, BRAKE CASE	1	1	1	1	1	1	1	1		
21	T2305-28211	PLATE, BRAKE	2	2	2	2	2	2	2	2		

REF. NO	PART. NO	DESCRIPTION	Q'TY								I.C	REMARK
			CK20-EU	CK20-NL	CK20J-NL	CK20J-IT	CK20J-EN	CK20-SP	CK20J-SP	CK20J-FR		
22	T2305-28201	DISK, BRAKE	3	3	3	3	3	3	3	3		
23	07715-00805	BALL, STEEL	3	3	3	3	3	3	3	3		
24	04811-00210	O-RING	2	2	2	2	2	2	2	2		
25	T2305-28051	BOLT	6	6	6	6	6	6	6	6		
26	04512-50080	WASHER, SPRING	6	6	6	6	6	6	6	6		
27	04612-00250	RING, SNAP	1	1	1	1	1	1	1	1		
28	04811-00250	O-RING	1	1	1	1	1	1	1	1		
29	T2305-28162	PACKING	2	2	2	2	2	2	2	2		
30	01133-51030	BOLT	12	12	12	12	12	12	12	12		
31	T2351-97361	BRACKET, SPRING	2	2	2	2	2	2	2	2		

T410 BRAKE PEDAL GROUP

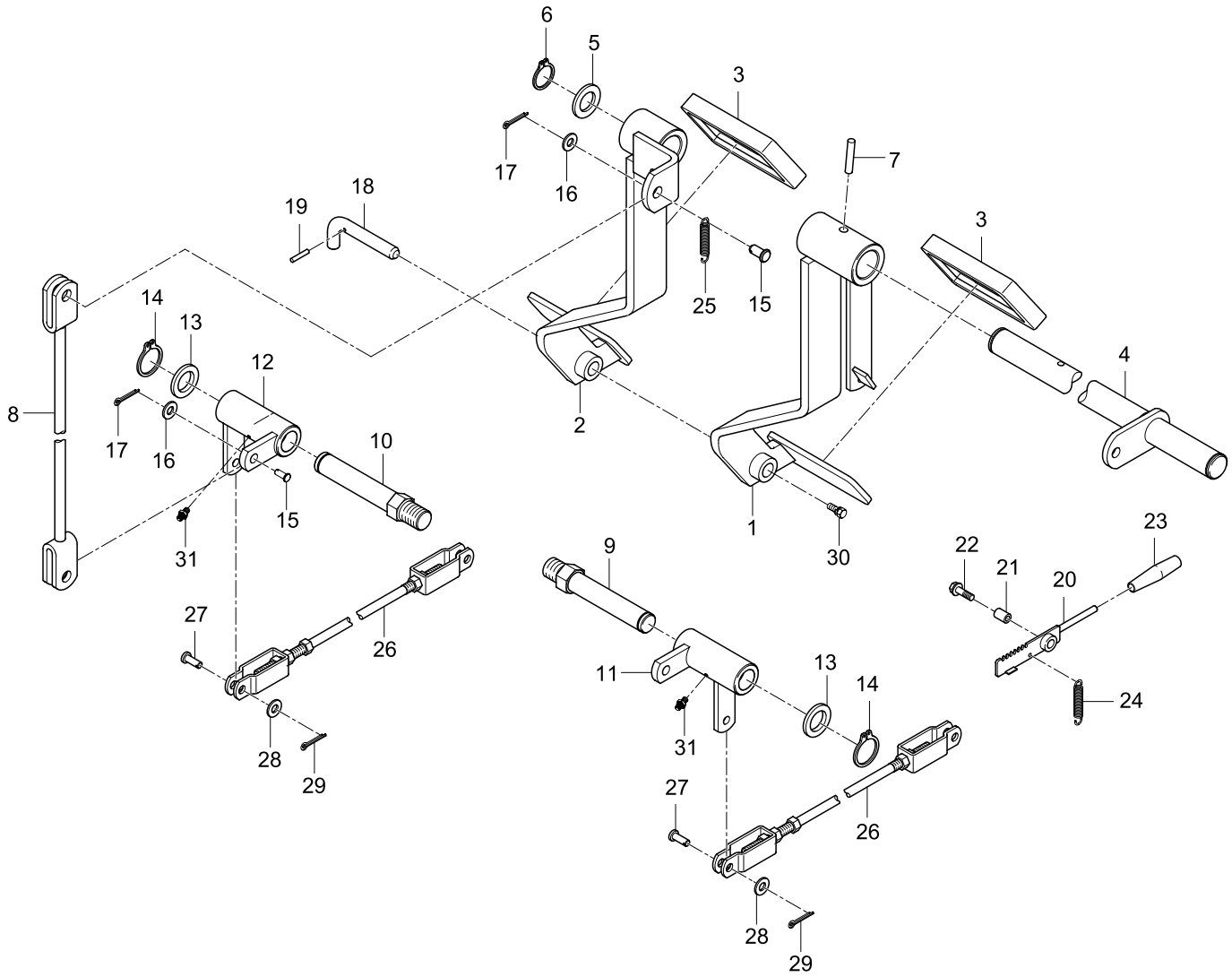

REF. NO	PART. NO	DESCRIPTION	Q'TY								I.C	REMARK
			CK20	CK20J	CK20H	CK20HJ	CK20J-AU	CK20HJ-AU	CK20H-EU	CK20H-NL		
01	T2350-55712	PEDAL, BRAKE (LH)	1	1			1					
01	T2360-55712	PEDAL, BRAKE (LH)			1	1		1	1	1		
01	T2360-55713	PEDAL, BRAKE (LH)			1	1		1	1	1		
01	T2360-55714	PEDAL, BRAKE (LH)			1	1		1	1	1		
02	T2350-55722	PEDAL, BRAKE (RH)	1	1			1					
02	T2350-55723	PEDAL, BRAKE (RH)	1	1			1					
02	T2360-55721	PEDAL, BRAKE (RH)			1	1		1	1	1		
02	T2360-55722	PEDAL, BRAKE (RH)			1	1		1	1	1		
02	T2360-55723	PEDAL, BRAKE (RH)			1	1		1	1	1		
03	T2670-55531	COVER, PEDAL	2	2	2	2	2	2	2	2		
04	T2350-55731	SHAFT, PEDAL	1	1	1	1	1	1	1	1		
04	T2350-55732	SHAFT, PEDAL	1	1	1	1	1	1	1	1		
05	84612-1445-0	COLLAR, CAM	1	1	1	1	1	1	1	1		
06	04612-00250	RING, SNAP	2	2	2	2	2	2	2	2		
07	05411-00840	PIN, SPRING	1	1	1	1	1	1	1	1		
08	T2350-55771	ROD 1, BRAKE	2	2	2	2	2	2	2	2		
09	T2350-55802	SHAFT, BRAKE (LH)	1	1	1	1	1	1	1	1		
10	T2350-55811	SHAFT, BRAKE (RH)	1	1	1	1	1	1	1	1		
11	T2350-55781	LEVER, BRAKE (LH)	1	1	1	1	1	1	1	1		
12	T2350-55792	LEVER, BRAKE (RH)	1	1	1	1	1	1	1	1		
13	04011-50200	WASHER, PLAIN	2	2	2	2	2	2	2	2		
13	04013-50200	WASHER, PLAIN	2	2	2	2	2	2	2	2		
14	04612-00200	RING, SNAP	2	2	2	2	2	2	2	2		
15	05122-51035	PIN, JOINT	2	2	2	2	2	2	2	2		
16	04013-50100	WASHER, PLAIN	4	4	4	4	4	4	4	4		

REF. NO	PART. NO	DESCRIPTION	Q'TY								I.C	REMARK
			CK20	CK20J	CK20H	CK20HJ	CK20J-AU	CK20HJ-AU	CK20H-EU	CK20H-NL		
17	T05511-50318	PIN, SPLIT	4	4	4	4	4	4	4	4		
18	T2350-55941	PIN, BRAKE PEDAL LOCK	1	1	1	1	1	1	1	1		
18	T2350-55942	PIN, BRAKE PEDAL LOCK	1	1	1	1	1	1	1	1		
19	05411-00325	PIN, SPRING	1	1	1	1	1	1	1	1		
20	T2350-55912	LEVER, PARKING BRAKE	1	1	1	1	1	1	1	1		
20	T2350-55913	LEVER, PARKING BRAKE	1	1	1	1	1	1	1	1		
21	T2350-55951	SPACER (PARKING BRAKE)	1	1	1	1	1	1	1	1		
22	01125-50830	BOLT	1	1	1	1	1	1	1	1		
23	T2350-55922	GRIP (PARKING BRAKE)	1	1	1	1	1	1	1	1		
24	57781-5121-1	SPRING	1	1	1	1	1	1	1	1		
25	T2350-55961	SPRING, BRAKE	2	2	2	2	2	2	2	2		
26	T2350-55821	ROD 2, BRAKE	2	2	2	2	2	2	2	2		
27	05122-50825	PIN, JOINT	4	4	4	4	4	4	4	4		
28	04013-50080	WASHER, PLAIN	4	4	4	4	4	4	4	4		
29	05511-50218	PIN, SPLIT	4	4	4	4	4	4	4	4		
30	01027-50614	BOLT			1	1		1	1	1		
31	06611-15675	NIPPLE, GREASE	2	2	2	2	2	2	2	2		

T411 BRAKE PEDAL GROUP

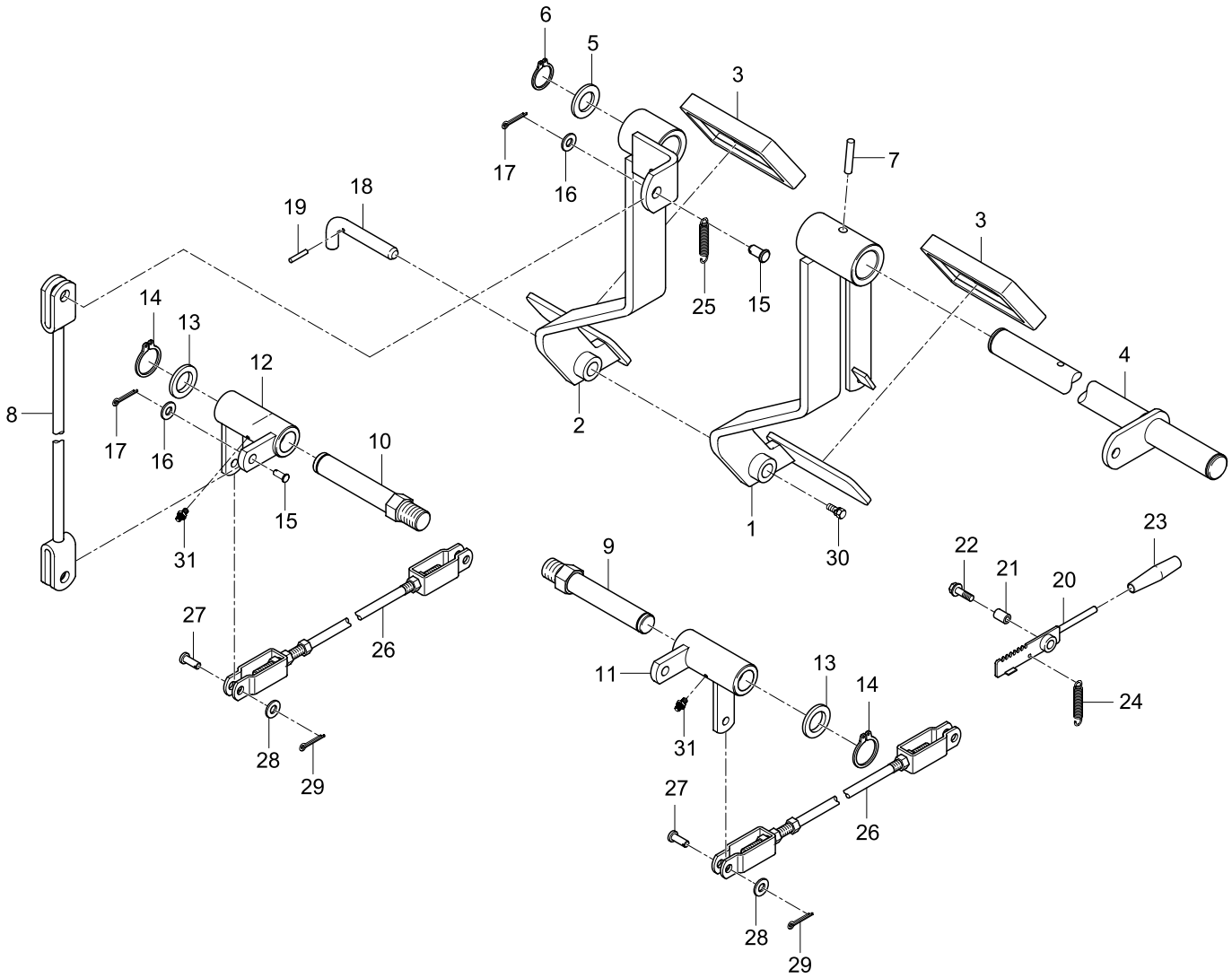

REF. NO	PART. NO	DESCRIPTION	Q'TY								I.C	REMARK
			CK20HJ-NL	CK20HJ-IT	CK20HJ-EN	CK20H-SP	CK20HJ-SP	CK20HJ-FR				
01	T2360-55712	PEDAL, BRAKE (LH)	1	1	1	1	1	1				
01	T2360-55713	PEDAL, BRAKE (LH)	1	1	1	1	1	1				
01	T2360-55714	PEDAL, BRAKE (LH)	1	1	1	1	1	1				
02	T2360-55721	PEDAL, BRAKE (RH)	1	1	1	1	1	1				
02	T2360-55722	PEDAL, BRAKE (RH)	1	1	1	1	1	1				
02	T2360-55723	PEDAL, BRAKE (RH)	1	1	1	1	1	1				
03	T2670-55531	COVER, PEDAL	2	2	2	2	2	2				
04	T2350-55731	SHAFT, PEDAL	1	1	1	1	1	1				
04	T2350-55732	SHAFT, PEDAL	1	1	1	1	1	1				
05	84612-1445-0	COLLAR, CAM	1	1	1	1	1	1				
06	04612-00250	RING, SNAP	2	2	2	2	2	2				
07	05411-00840	PIN, SPRING	1	1	1	1	1	1				
08	T2350-55771	ROD 1, BRAKE	2	2	2	2	2	2				
09	T2350-55802	SHAFT, BRAKE (LH)	1	1	1	1	1	1				
10	T2350-55811	SHAFT, BRAKE (RH)	1	1	1	1	1	1				
11	T2350-55781	LEVER, BRAKE (LH)	1	1	1	1	1	1				
12	T2350-55792	LEVER, BRAKE (RH)	1	1	1	1	1	1				
13	04011-50200	WASHER, PLAIN	2	2	2	2	2	2				
13	04013-50200	WASHER, PLAIN	2	2	2	2	2	2				
14	04612-00200	RING, SNAP	2	2	2	2	2	2				
15	05122-51035	PIN, JOINT	2	2	2	2	2	2				
16	04013-50100	WASHER, PLAIN	4	4	4	4	4	4				
17	05511-50318	PIN, SPLIT	4	4	4	4	4	4				
18	T2350-55941	PIN, BRAKE PEDAL LOCK	1	1	1	1	1	1				
18	T2350-55942	PIN, BRAKE PEDAL LOCK	1	1	1	1	1	1				

REF. NO	PART. NO	DESCRIPTION	Q'TY								I.C	REMARK
			CK20HJ-NL	CK20HJ-IT	CK20HJ-EN	CK20H-SP	CK20HJ-SP	CK20HJ-FR				
19	05411-00325	PIN, SPRING	1	1	1	1	1	1				
20	T2350-55912	LEVER, PARKING BRAKE	1	1	1	1	1	1				
20	T2350-55913	LEVER, PARKING BRAKE	1	1	1	1	1	1				
21	T2350-55951	SPACER (PARKING BRAKE)	1	1	1	1	1	1				
22	01125-50830	BOLT	1	1	1	1	1	1				
23	T2350-55922	GRIP (PARKING BRAKE)	1	1	1	1	1	1				
24	57781-5121-1	SPRING	1	1	1	1	1	1				
25	T2350-55961	SPRING, BRAKE	2	2	2	2	2	2				
26	T2350-55821	ROD 2, BRAKE	2	2	2	2	2	2				
27	05122-50825	PIN, JOINT	4	4	4	4	4	4				
28	04013-50080	WASHER, PLAIN	4	4	4	4	4	4				
29	05511-50218	PIN, SPLIT	4	4	4	4	4	4				
30	01027-50614	BOLT	1	1	1	1	1	1				
31	06611-15675	NIPPLE, GREASE	2	2	2	2	2	2				

T415 BRAKE PEDAL GROUP

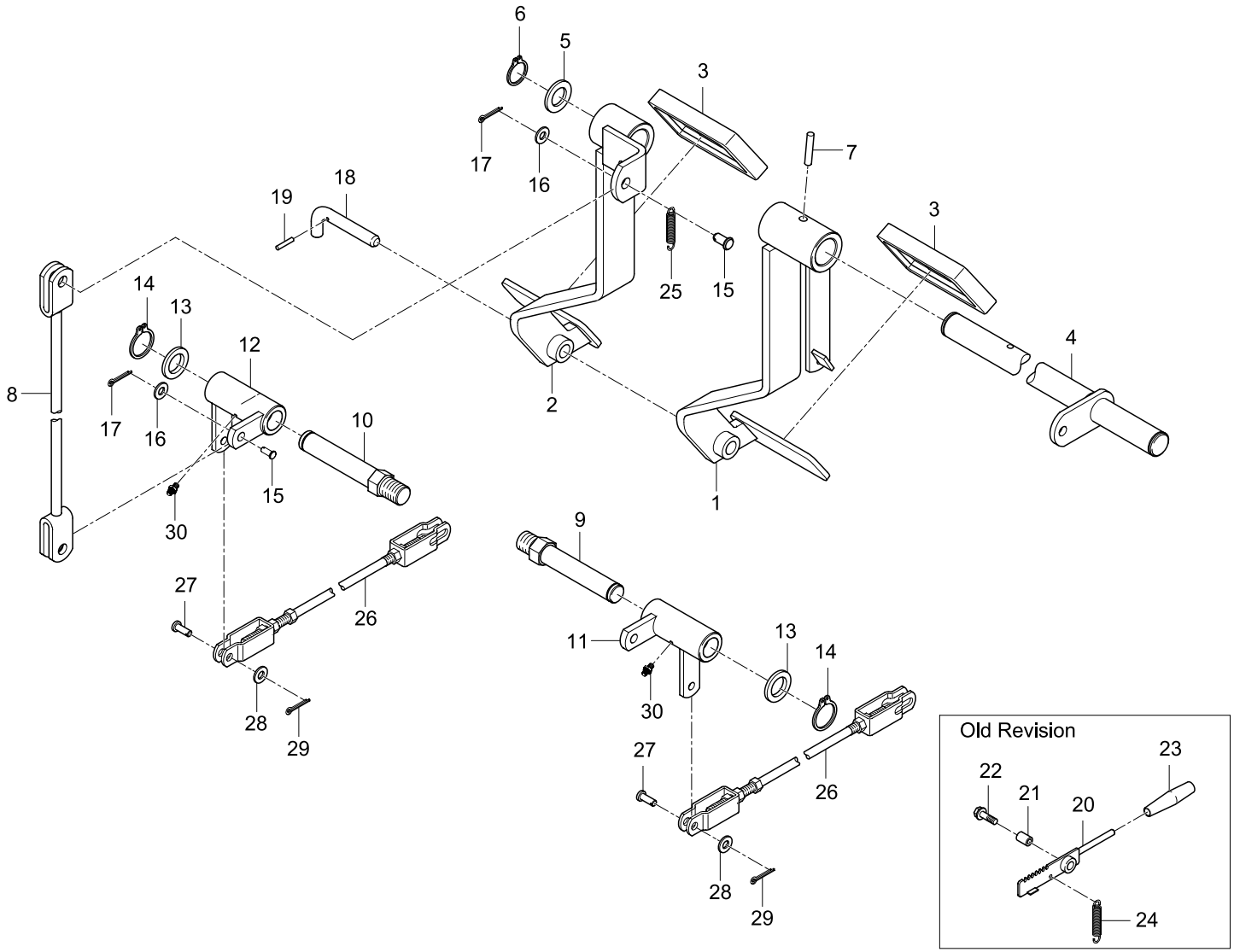

REF. NO	PART. NO	DESCRIPTION	Q'TY								I.C	REMARK
			CK20-EU	CK20-NL	CK20J-NL	CK20J-IT	CK20J-EN	CK20-SP	CK20J-SP	CK20J-FR		
01	T2350-55712	PEDAL, BRAKE (LH)	1	1	1	1	1	1	1	1		
02	T2350-55722	PEDAL, BRAKE (RH)	1	1	1	1	1	1	1	1		
02	T2350-55723	PEDAL, BRAKE (RH)	1	1	1	1	1	1	1	1		
03	T2670-55531	COVER, PEDAL	2	2	2	2	2	2	2	2		
04	T2350-55731	SHAFT, PEDAL	1	1	1	1	1	1	1	1		
04	T2350-55732	SHAFT, PEDAL	1	1	1	1	1	1	1	1		
05	84612-1445-0	COLLAR, CAM	1	1	1	1	1	1	1	1		
06	04612-00250	RING, SNAP	2	2	2	2	2	2	2	2		
07	05411-00840	PIN, SPRING	1	1	1	1	1	1	1	1		
08	T2350-55771	ROD 1, BRAKE	2	2	2	2	2	2	2	2		
09	T2350-55802	SHAFT, BRAKE (LH)	1	1	1	1	1	1	1	1		
10	T2350-55811	SHAFT, BRAKE (RH)	1	1	1	1	1	1	1	1		
11	T2350-55781	LEVER, BRAKE (LH)	1	1	1	1	1	1	1	1		
12	T2350-55792	LEVER, BRAKE (RH)	1	1	1	1	1	1	1	1		
13	04011-50200	WASHER, PLAIN	2	2	2	2	2	2	2	2		
13	04013-50200	WASHER, PLAIN	2	2	2	2	2	2	2	2		
14	04612-00200	RING, SNAP	2	2	2	2	2	2	2	2		
15	05122-51035	PIN, JOINT	2	2	2	2	2	2	2	2		
16	04013-50100	WASHER, PLAIN	4	4	4	4	4	4	4	4		
17	05511-50318	PIN, SPLIT	4	4	4	4	4	4	4	4		
18	T2350-55941	PIN, BRAKE PEDAL LOCK	1	1	1	1	1	1	1	1		
18	T2350-55942	PIN, BRAKE PEDAL LOCK	1	1	1	1	1	1	1	1		
19	05411-00325	PIN, SPRING	1	1	1	1	1	1	1	1		
20	T2350-55912	LEVER, PARKING BRAKE	1	1	1	1	1	1	1	1		
20	T2350-55913	LEVER, PARKING BRAKE	1 ~3193-00010	1 ~3194-00320	1 ~3195-00120	1 ~D196-00200	1 ~D050-00080	1 ~D050-00080	1 ~D051-00120	1 ~D051-00120		Deleted

REF. NO	PART. NO	DESCRIPTION	Q'TY								I.C	REMARK
			CK20-EU	CK20-NL	CK20J-NL	CK20J-IT	CK20J-EN	CK20-SP	CK20J-SP	CK20J-FR		
21	T2350-55951	SPACER (PARKING BRAKE)	1	1	1	1	1	1	1	1		Deleted
			~3193-00010	~3194-00320	~3195-00120	~D196-00200	~D050-00080	~D050-00080	~D051-00120	~D051-00120		
22	01125-50820	BOLT	1	1	1	1	1	1	1	1		Deleted
			~3193-00010	~3194-00320	~3195-00120	~D196-00200	~D050-00080	~D050-00080	~D051-00120	~D051-00120		
23	T2350-55922	GRIP (PARKING BRAKE)	1	1	1	1	1	1	1	1		Deleted
			~3193-00010	~3194-00320	~3195-00120	~D196-00200	~D050-00080	~D050-00080	~D051-00120	~D051-00120		
24	57781-5121-1	SPRING	1	1	1	1	1	1	1	1		
24	T2670-55841	SPRING	1	1	1	1	1	1	1	1		Deleted
			~3193-00010	~3194-00320	~3195-00120	~D196-00200	~D050-00080	~D050-00080	~D051-00120	~D051-00120		
25	T2350-55961	SPRING, BRAKE	2	2	2	2	2	2	2	2		
26	T2351-55821	ROD 2, BRAKE	2	2	2	2	2	2	2	2		
27	05122-50825	PIN, JOINT	4	4	4	4	4	4	4	4		
28	04013-50080	WASHER, PLAIN	4	4	4	4	4	4	4	4		
29	05511-50218	PIN, SPLIT	4	4	4	4	4	4	4	4		
30	06611-15675	NIPPLE, GREASE	2	2	2	2	2	2	2	2		

T420 REAR AXLE GROUP

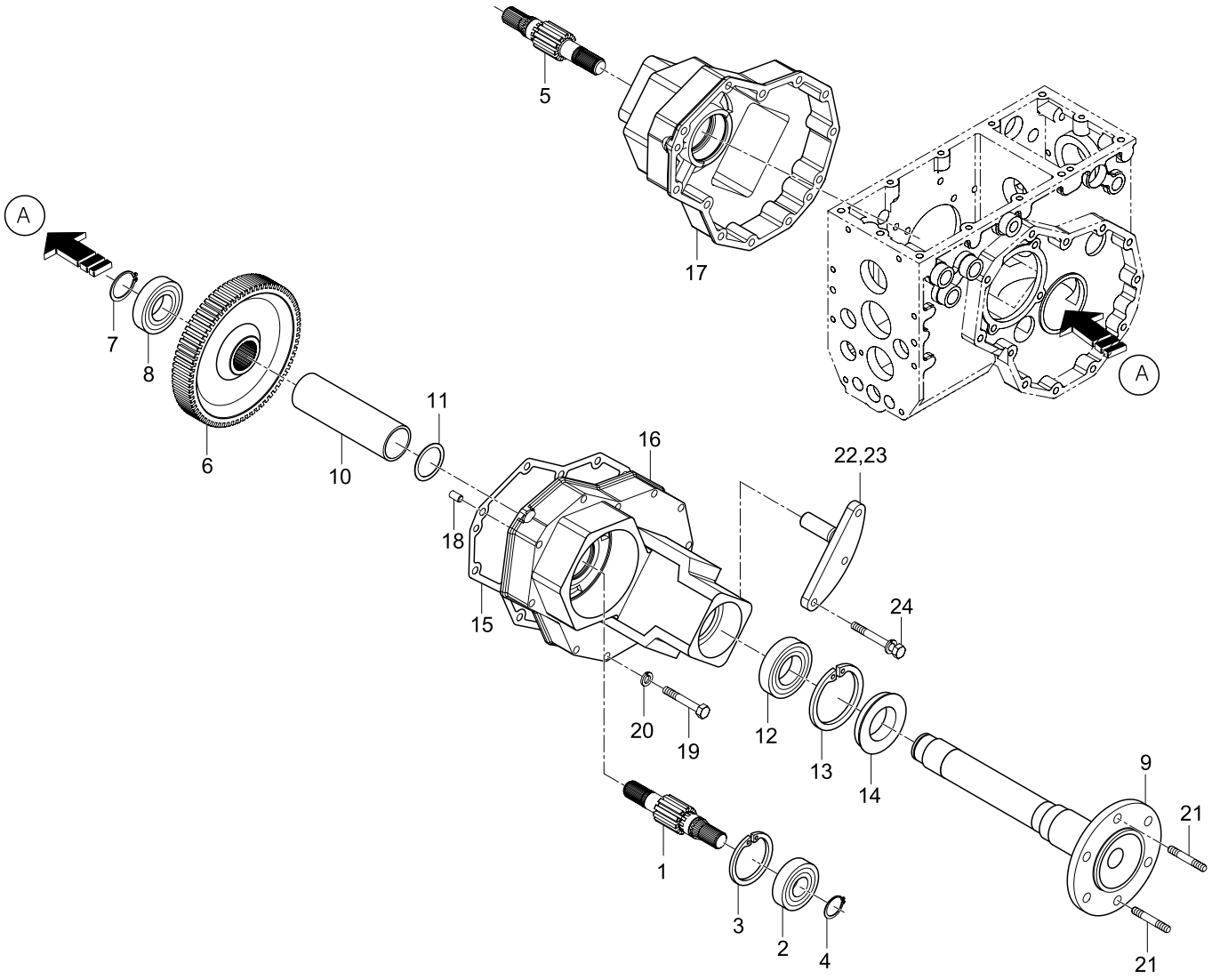

REF. NO	PART. NO	DESCRIPTION	Q'TY								I.C	REMARK
			CK20	CK20J	CK20H	CK20HJ	CK20-EU	CK20J-EU	CK20H-EU	CK20HJ-EU		
01	T2350-26712	SHAFT, 11 GEAR (LH)	1	1	1	1	1	1	1	1		
02	08101-06306	BEARING, BALL	2	2	2	2	2	2	2	2		
03	04611-00720	RING, SNAP	2	2	2	2	2	2	2	2		
04	04612-00300	RING, SNAP	2	2	2	2	2	2	2	2		
05	T2350-26722	SHAFT, 11 GEAR (RH)	1	1	1	1	1	1	1	1		
06	T2350-26831	GEAR, 72	2	2	2	2	2	2	2	2		
07	04612-00400	RING, SNAP	2	2	2	2	2	2	2	2		
08	08101-06208	BEARING, BALL	2	2	2	2	2	2	2	2		
09	T2350-27111	AXLE, REAR	2	2	2	2	2	2	2	2		
10	T2350-27141	SPACER (REAR AXLE)	2	2	2	2	2	2	2	2		
11	T2440-27151	COLLAR	2	2	2	2	2	2	2	2		
12	08101-06209	BEARING, BALL	2	2	2	2	2	2	2	2		
13	04611-00850	RING, SNAP	2	2	2	2	2	2	2	2		
14	T2305-27561	SEAL, OIL	2	2	2	2	2	2	2	2		
15	T2305-27342	PACKING	2	2	2	2	2	2	2	2		
16	T2350-27312	CASE, REAR AXLE (LH)	1	1	1	1	1	1	1	1		
17	T2350-27322	CASE, REAR AXLE (RH)	1	1	1	1	1	1	1	1		
18	05012-01018	PIN, STRAIGHT	4	4	4	4	4	4	4	4		
19	01173-51070	BOLT	18	18	18	18	18	18	18	18		
20	04512-50100	WASHER, SPRING	18	18	18	18	18	18	18	18		
21	T2305-27711	STUD	4	4	4	4	4	4	4	4		
22	T2305-29733	BRACKET, HITCH (LH)	1	1	1	1	1	1	1	1		
23	T2305-29743	BRACKET, HITCH (RH)	1	1	1	1	1	1	1	1		
24	01133-51080	BOLT	6	6	6	6	6	6	6	6		

T430 REAR WHEEL GROUP

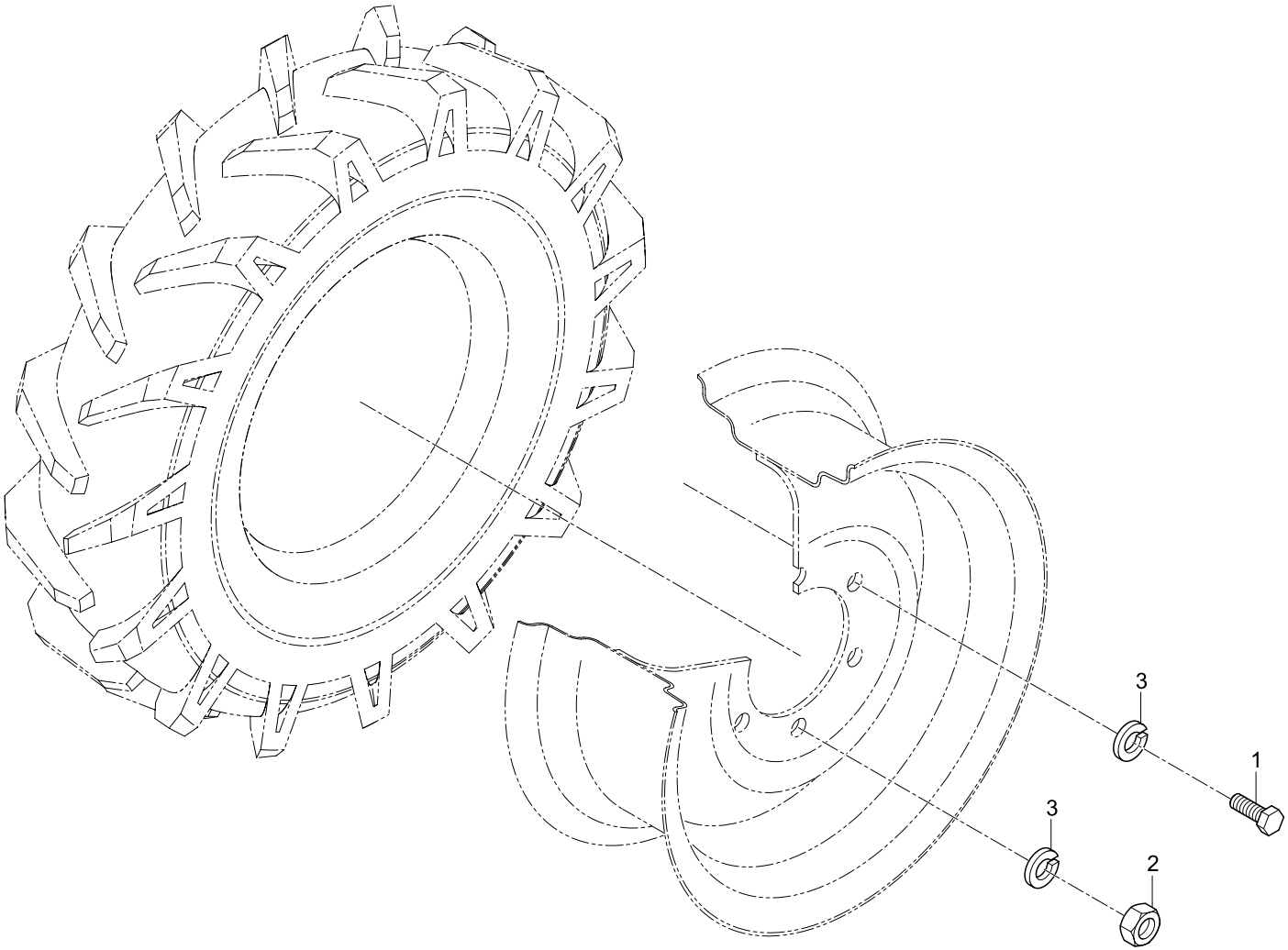

REF. NO	PART. NO	DESCRIPTION	Q'TY								I.C	REMARK
			CK20	CK20J	CK20H	CK20HJ	CK20-EU	CK20J-IT	CK20J-EN	CK20J-FR		
01	01073-51628	BOLT	8	8	8	8	8	8	8	8		
02	02076-50160	NUT	4	4	4	4	4	4	4	4		
03	04512-50160	WASHER, SPRING	12	12	12	12	12	12	12	12		

T431 REAR WHEEL GROUP

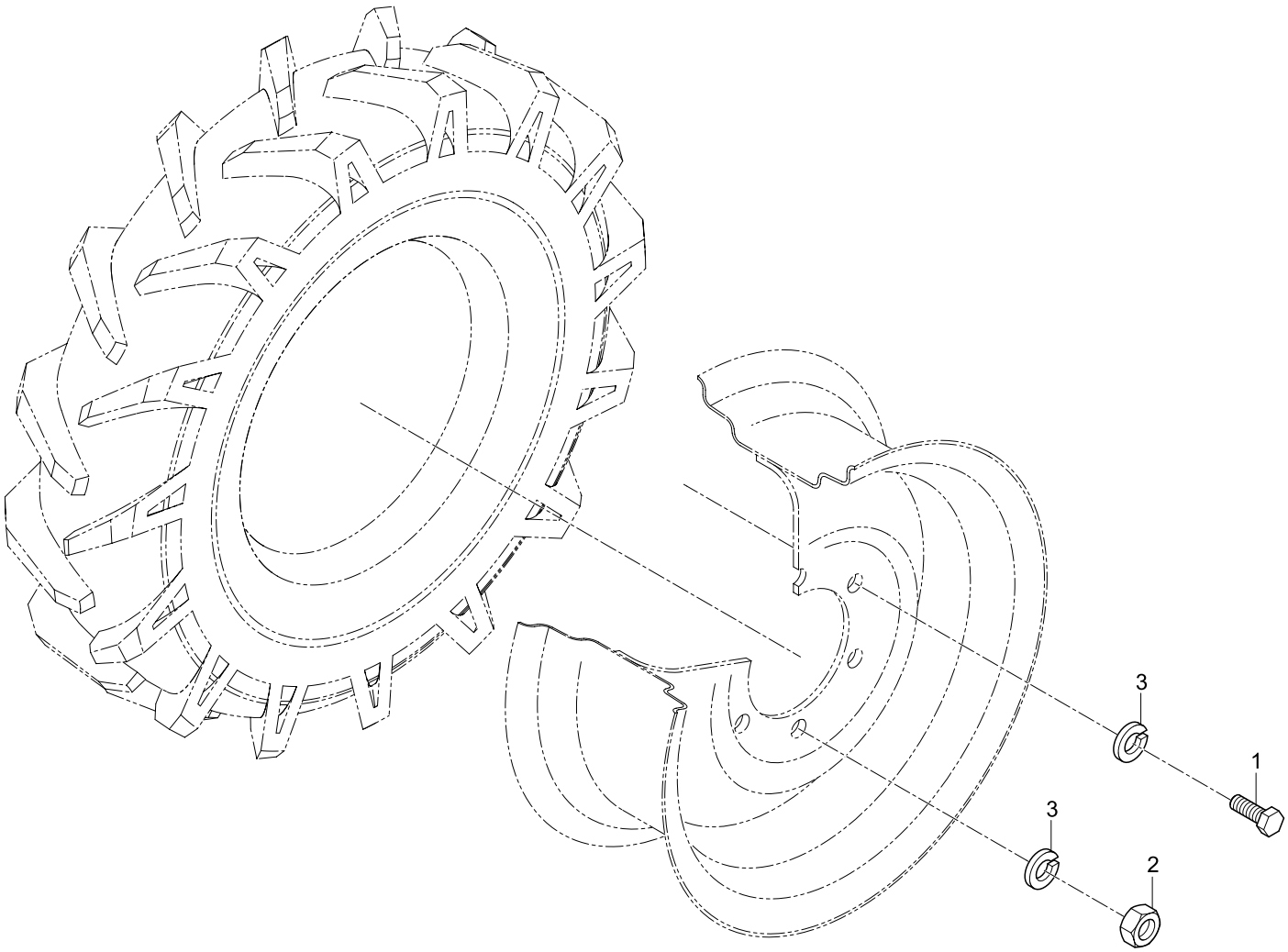

REF. NO	PART. NO	DESCRIPTION	Q'TY								I.C	REMARK
			CK20H-EU	CK20HJ-IT	CK20HJ-EN	CK20H-SP	CK20HJ-FR					
01	01073-51628	BOLT	8	8	8	8	8					
02	02076-50160	NUT	4	4	4	4	4					
03	04512-50160	WASHER, SPRING	12	12	12	12	12					

T435 REAR WHEEL GROUP (Option)

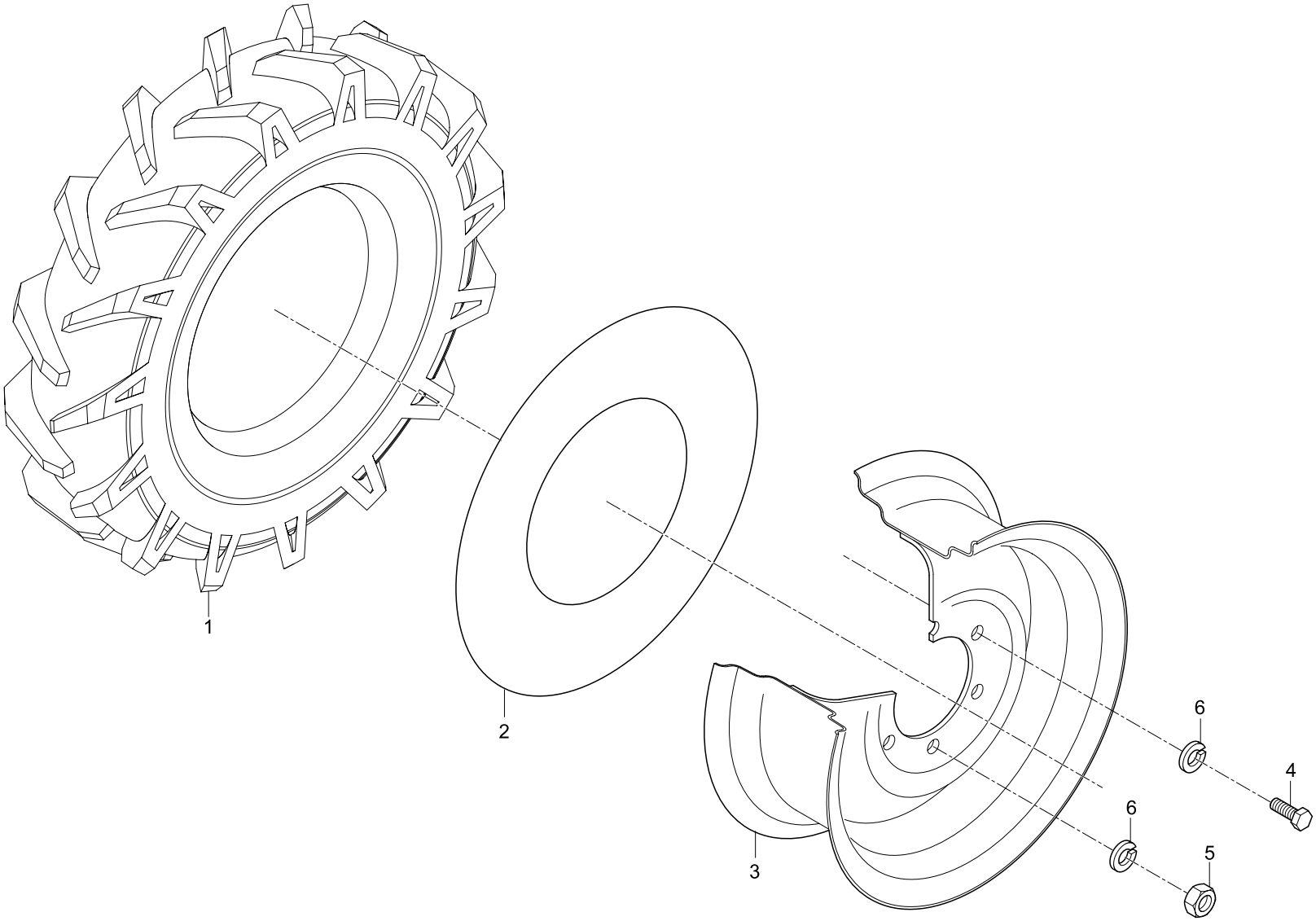

REF. NO	PART. NO	DESCRIPTION	Q'TY								I.C	REMARK
			CK20J-AU	CK20-NL	CK20J-NL	CK20-SP	CK20J-SP	CK20HJ-AU	CK20H-NL	CK20HJ-NL		
01	T4340-43751	TIRE, REAR (9.5-16 6PR)	2	2	2	2	2	2	2	2		
02	T4340-43761	TUBE (9.5-16 6PR)	2	2	2	2	2	2	2	2		
03	T2351-27431	RIM	2	2	2	2	2	2	2	2		
04	01073-51628	BOLT	8	8	8	8	8	8	8	8		
05	02076-50160	NUT	4	4	4	4	4	4	4	4		
06	04512-50160	WASHER, SPRING	12	12	12	12	12	12	12	12		

T436 REAR WHEEL GROUP (Option)

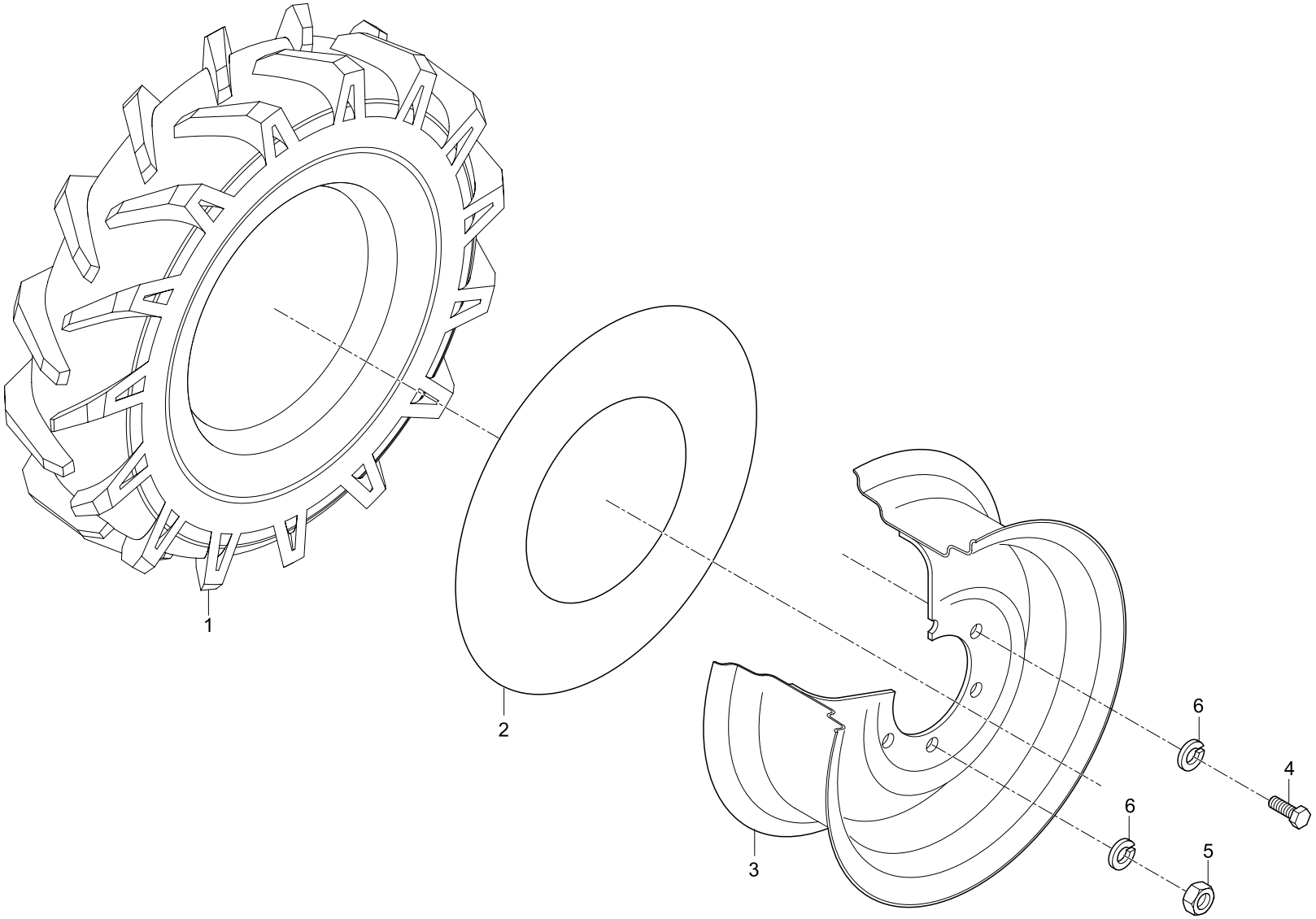

REF. NO	PART. NO	DESCRIPTION	Q'TY								I.C	REMARK
			CK20HJ-SP									
01	T4340-43751	TIRE, REAR (9.5-16 6PR)	2									
02	T4340-43761	TUBE (9.5-16 6PR)	2									
03	T2351-27431	RIM	2									
04	01073-51628	BOLT	8									
05	02076-50160	NUT	4									
06	04512-50160	WASHER, SPRING	12									

T440 FRONT AXLE FRAME GROUP

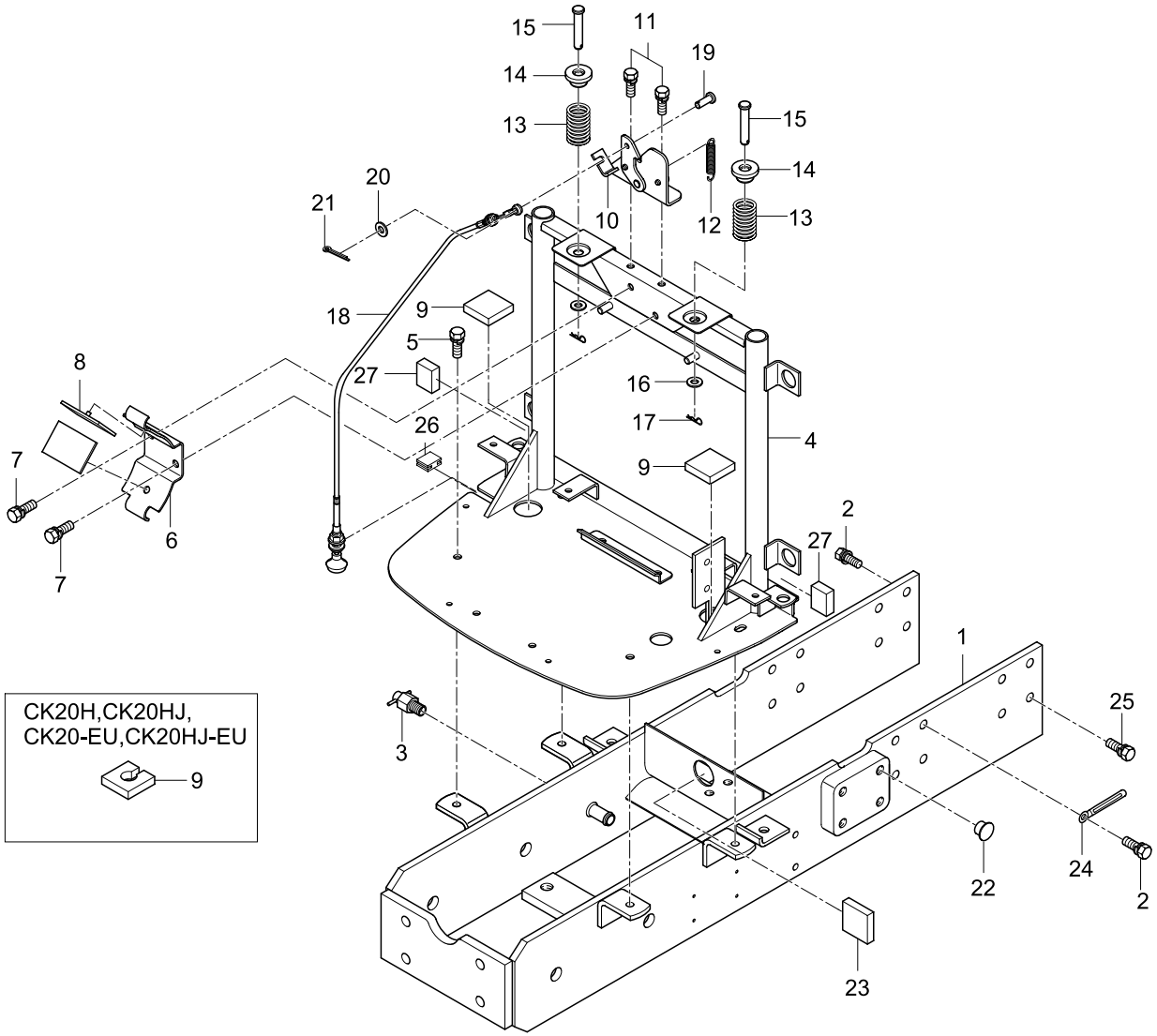

REF. NO	PART. NO	DESCRIPTION	Q'TY								I.C	REMARK
			CK20	CK20J	CK20H	CK20HJ	CK20-EU	CK20J-EU	CK20H-EU	CK20HJ-EU		
01	T2350-50014	FRAME, FRONT AXLE	1	1	1	1	1	1	1	1		
01	T2350-50015	FRAME, FRONT AXLE	1	1	1	1	1	1	1	1		
01	T2350-50016	FRAME, FRONT AXLE	1	1	1	1	1	1	1	1		
02	01133-51025	BOLT	12	12	12	12	12	12	12	12		
03	76KD-0121-2	COCK, DRAIN	1	1	1	1	1	1	1	1		
04	T2350-50212	SUPPORT, RADIATOR	1	1	1	1	1	1	1	1		
04	T2350-50213	SUPPORT, RADIATOR	1	1	1	1	1	1	1	1		
05	01123-50825	BOLT	4	4	4	4	4	4	4	4		
06	T2350-50311	SUPPORT, AIRCLEANER	1	1	1	1	1	1	1	1		
07	01123-50816	BOLT	2	2	2	2	2	2	2	2		
08	T2350-50321	CUSHION	2	2	2	2	2	2	2	2		
09	T2350-37551	SPONGE (OIL COOLER)	2	2			2	2				
09	T2360-37551	SPONGE (OIL COOLER)			2	2			2	2		
10	T4682-50681	CATCH ASS'Y	1	1	1	1	1	1	1	1		
10	T4682-50682	CATCH ASS'Y	1	1	1	1	1	1	1	1		
11	01123-50816	BOLT	2	2	2	2	2	2	2	2		
12	57781-5121-1	SPRING	1	1	1	1	1	1	1	1		
13	T4682-50351	SPRING (BONNET)	2	2	2	2	2	2	2	2		
14	T4682-50361	RUBBER, CUSHION	2	2	2	2	2	2	2	2		
15	05122-51055	PIN, JOINT	2	2	2	2	2	2	2	2		
16	04013-50100	WASHER, PLAIN	2	2	2	2	2	2	2	2		
17	05511-50320	PIN, SPLIT	2	2	2	2	2	2	2	2		
18	T2350-50691	CABLE, BONNET OPEN	1	1	1	1	1	1	1	1		
19	05122-50614	PIN, JOINT	1	1	1	1	1	1	1	1		
20	04014-50060	WASHER, PLAIN	1	1	1	1	1	1	1	1		

REF. NO	PART. NO	DESCRIPTION	Q'TY								I.C	REMARK
			CK20	CK20J	CK20H	CK20HJ	CK20-EU	CK20J-EU	CK20H-EU	CK20HJ-EU		
21	05511-51615	PIN, SPLIT	1	1	1	1	1	1	1	1		
22	32210-2758-1	PLUG	8	8	8	8	8	8	8	8		
23	T2350-50021	SPONGE(OIL COOLER)	1	1	1	1	1	1	1	1		
24	34260-2938-1	HOLDER, WIRE	1	1	1	1	1	1	1	1		
25	01133-51028	BOLT	4	4	4	4	4	4	4	4		
26	T2350-29291	COVER	1	1	1	1	1	1	1	1		
27	T2350-50031	SPONGE	2	2	2	2	2	2	2	2		

T450 FRONT AXLE SUPPORT GROUP

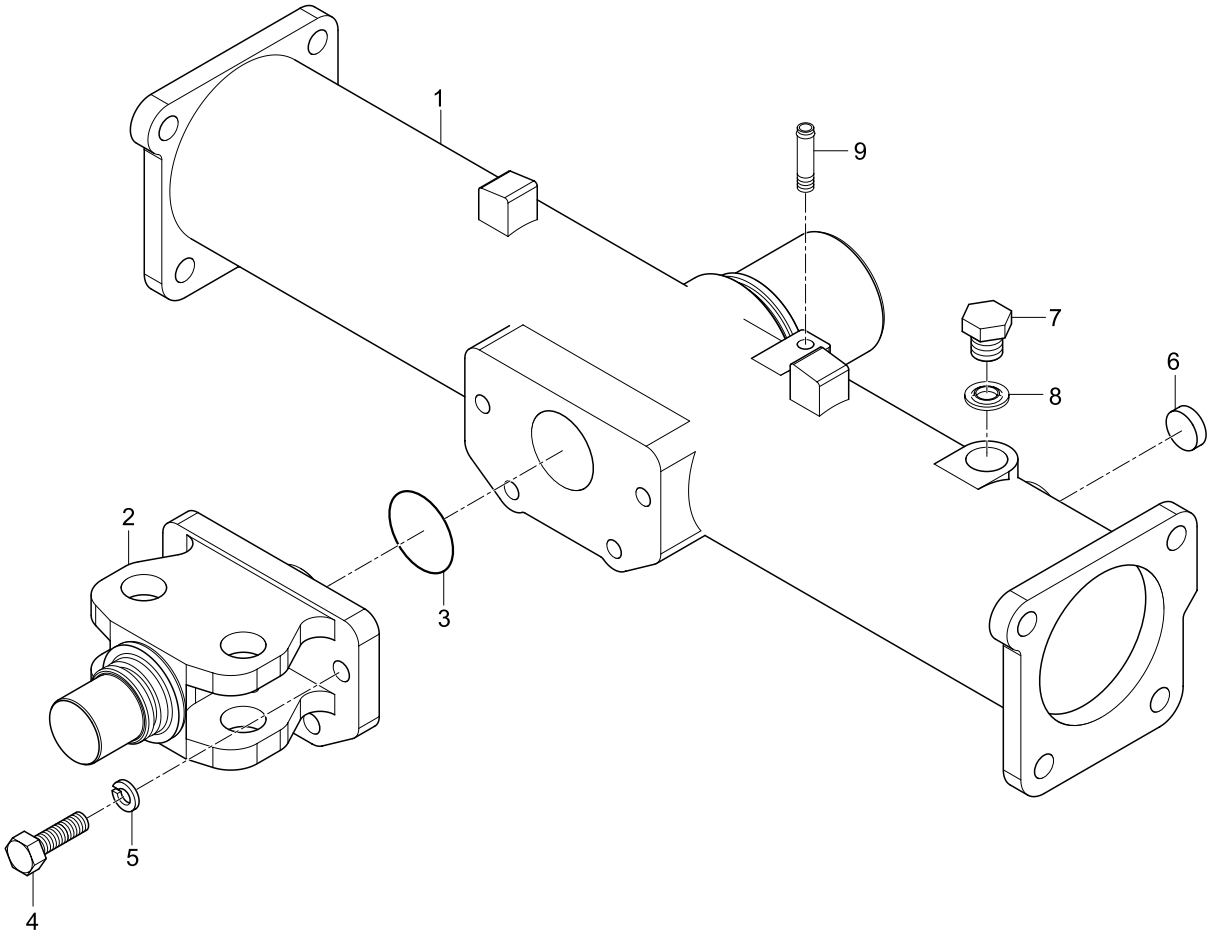

REF. NO	PART. NO	DESCRIPTION	Q'TY								I.C	REMARK
			CK20	CK20J	CK20H	CK20HJ	CK20-EU	CK20J-EU	CK20H-EU	CK20HJ-EU		
01	T2350-42142	SUPPORT, FRONT AXLE	1	1	1	1	1	1	1	1		
02	T2350-41651	PIN, CENTER	1	1	1	1	1	1	1	1		
03	04811-00340	O-RING	1	1	1	1	1	1	1	1		
04	01173-51030	BOLT	4	4	4	4	4	4	4	4		
05	04512-50100	WASHER, SPRING	4	4	4	4	4	4	4	4		
06	T4680-14211	GAUGE, OIL	1	1	1	1	1	1	1	1		
07	34150-1426-1	PLUG, DRAIN	1	1	1	1	1	1	1	1		
08	04717-02150	WASHER, SEAL	1	1	1	1	1	1	1	1		
09	T2630-42161	TUBE	1	1	1	1	1	1	1	1		

T460 FRONT DIFFERENTIAL GROUP

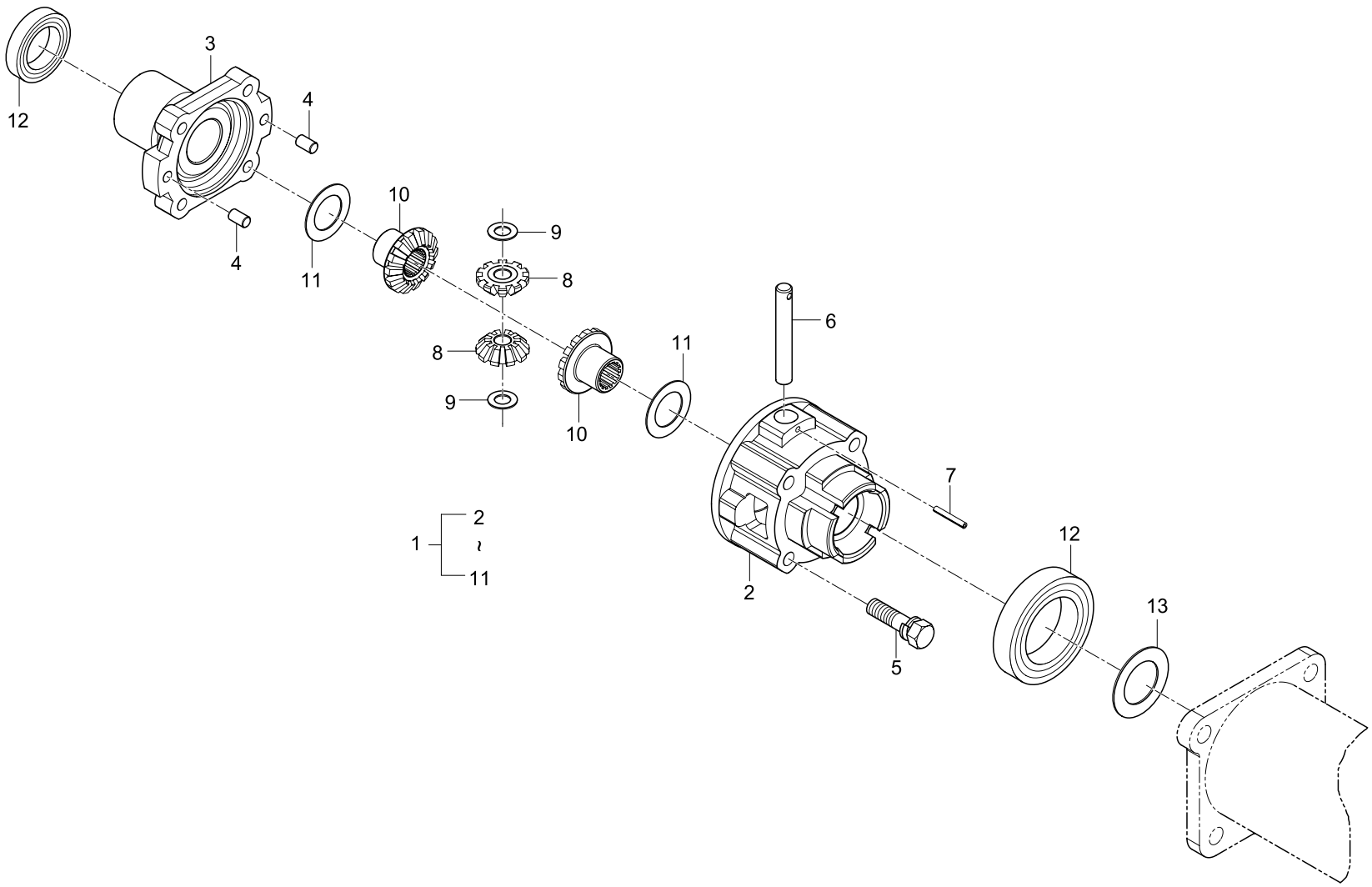

REF. NO	PART. NO	DESCRIPTION	Q'TY								I.C	REMARK
			CK20	CK20J	CK20H	CK20HJ	CK20-EU	CK20J-EU	CK20H-EU	CK20HJ-EU		
01	T2350-43101	FRONT DIFFERENTIAL ASS'Y	1	1	1	1	1	1	1	1		
02	T2350-43121	CASE, FRONT DIFFERENTIAL	1	1	1	1	1	1	1	1		
03	T2350-42321	COVER, FRONT DIFFERENTIA CASE	1	1	1	1	1	1	1	1		
03	T2350-42322	COVER, FRONT DIFFERENTIA CASE	1	1	1	1	1	1	1	1		
04	05012-00814	PIN, STRAIGHT	2	2	2	2	2	2	2	2		
05	01123-50855	BOLT	4	4	4	4	4	4	4	4		
06	T2350-43111	SHAFT, DIFFERENTIAL PINION	1	1	1	1	1	1	1	1		
07	05411-00428	PIN, SPRING	1	1	1	1	1	1	1	1		
08	T2350-43131	PINION, DIFFERENTIAL	2	2	2	2	2	2	2	2		
09	T2350-43241	SHIM (t 0.8)	2	2	2	2	2	2	2	2		
09	T2350-43251	SHIM (t 1.0)	2	2	2	2	2	2	2	2		
09	T2350-43261	SHIM (t 1.2)	2	2	2	2	2	2	2	2		
10	T2350-43141	GEAR, DIFFERENTIAL SIDE	2	2	2	2	2	2	2	2		
11	T2350-43271	SHIM (t 0.8)	2	2	2	2	2	2	2	2		
11	T2350-43281	SHIM (t 1.0)	2	2	2	2	2	2	2	2		
11	T2350-43291	SHIM (t 1.2)	2	2	2	2	2	2	2	2		
12	08101-06010	BEARING, BALL	2	2	2	2	2	2	2	2		
13	T2305-26061	SHIM (t 0.1)	1	1	1	1	1	1	1	1		
13	T2305-26071	SHIM (t 0.2)	1	1	1	1	1	1	1	1		
13	T2305-26081	SHIM (t 0.4)	1	1	1	1	1	1	1	1		

T470 BEVEL PINION SHAFT GROUP

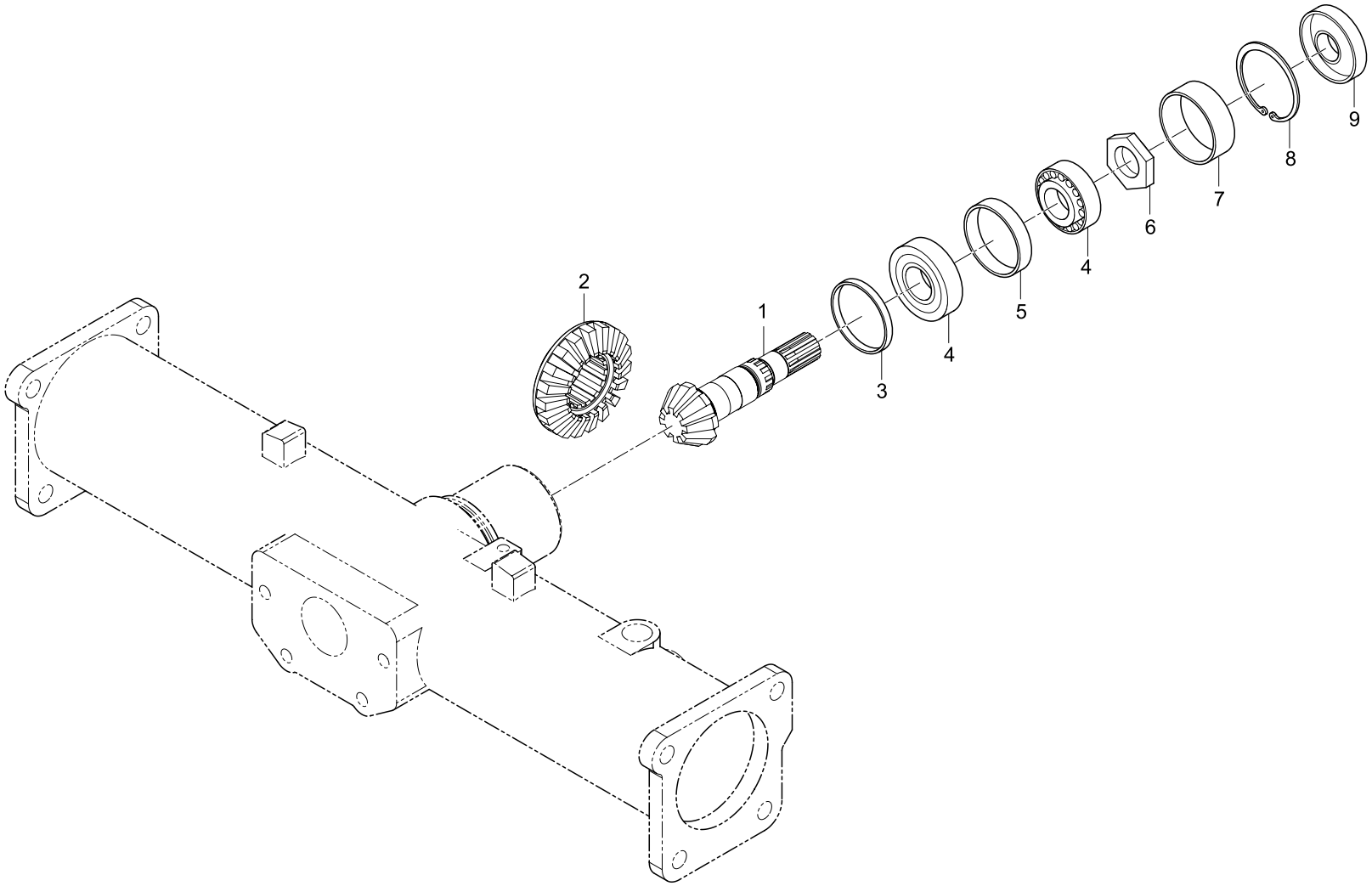

REF. NO	PART. NO	DESCRIPTION	Q'TY								I.C	REMARK
			CK20	CK20J	CK20H	CK20HJ	CK20-EU	CK20J-EU	CK20H-EU	CK20HJ-EU		
01	T2350-43211	SHAFT, 8 BEVEL PINION	1	1	1	1	1	1	1	1		
02	T2350-43311	GEAR, 19 SPIRAL BEVEL	1	1	1	1	1	1	1	1		
03	T2350-42451	COLLAR	1	1	1	1	1	1	1	1		
03	T2350-42461	COLLAR	1	1	1	1	1	1	1	1		
03	T2350-42471	COLLAR	1	1	1	1	1	1	1	1		
03	T2350-42481	COLLAR	1	1	1	1	1	1	1	1		
03	T2350-42491	COLLAR	1	1	1	1	1	1	1	1		
04	08711-30205	BEARING, TAPER ROLLER	2	2	2	2	2	2	2	2		
05	T2350-42751	SPACER 1 (FRONT DIFFERENTIAL)	1	1	1	1	1	1	1	1		
06	T2350-25361	NUT, 24	1	1	1	1	1	1	1	1		
07	T2350-42761	COLLAR 2 (FRONT DIFFERENTIAL)	1	1	1	1	1	1	1	1		
07	T2350-42771	COLLAR 2 (FRONT DIFFERENTIAL)	1	1	1	1	1	1	1	1		
07	T2350-42781	COLLAR 2 (FRONT DIFFERENTIAL)	1	1	1	1	1	1	1	1		
07	T2350-42791	COLLAR 2 (FRONT DIFFERENTIAL)	1	1	1	1	1	1	1	1		
07	T2350-42801	COLLAR 2 (FRONT DIFFERENTIAL)	1	1	1	1	1	1	1	1		
08	04611-00520	RING, SNAP	1	1	1	1	1	1	1	1		
09	38440-4424-0	SEAL, OIL	1	1	1	1	1	1	1	1		

T480 DIFFERENTIAL GEAR SHAFT GROUP

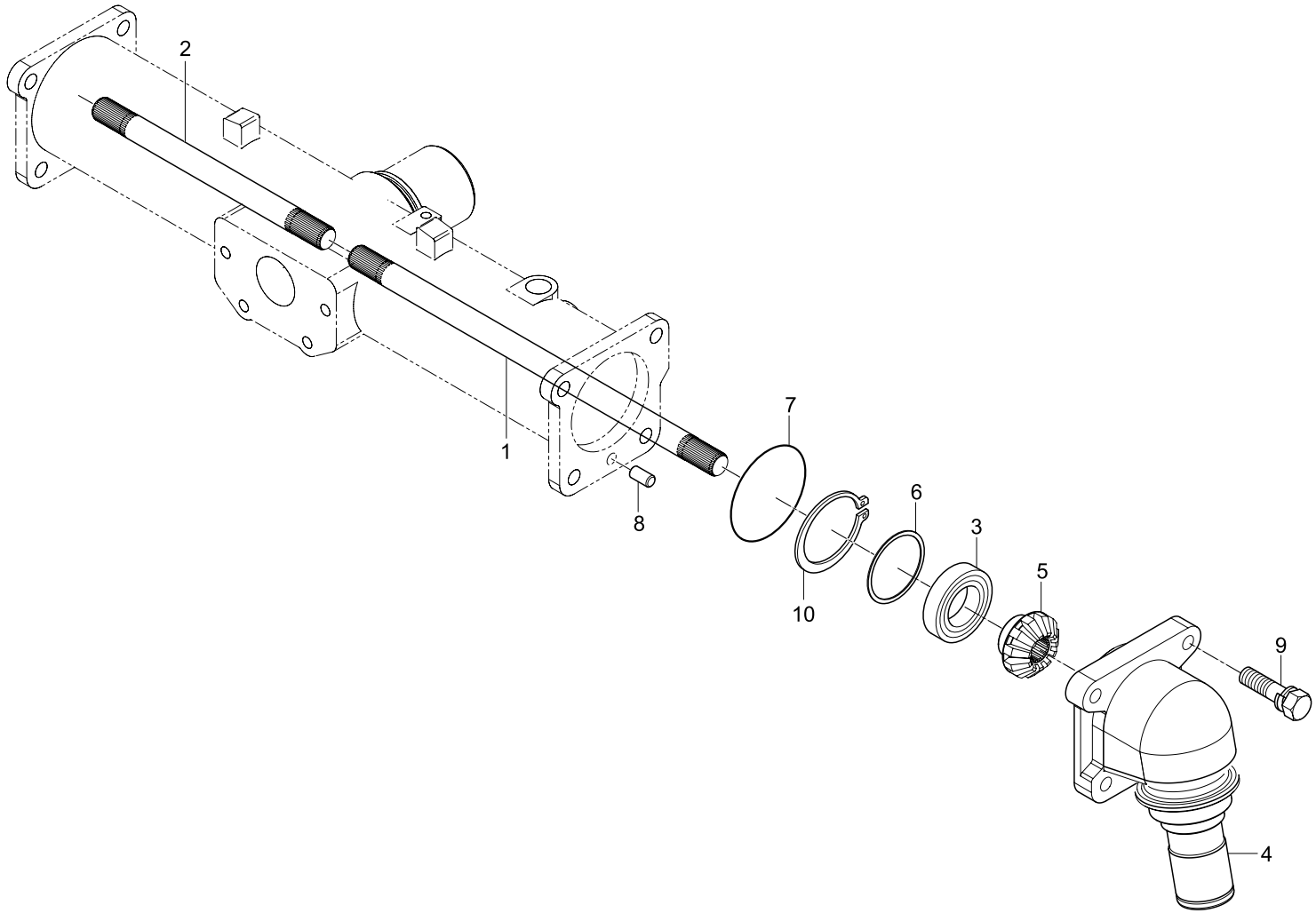

REF. NO	PART. NO	DESCRIPTION	Q'TY								I.C	REMARK
			CK20	CK20J	CK20H	CK20HJ	CK20-EU	CK20J-EU	CK20H-EU	CK20HJ-EU		
01	T2350-43811	SHAFT, DIFFERENTIAL GEAR (LH)	1	1	1	1	1	1	1	1		
02	T2350-43821	SHAFT, DIFFERENTIAL GEAR (RH)	1	1	1	1	1	1	1	1		
03	08101-06007	BEARING, BALL	2	2	2	2	2	2	2	2		
04	T2350-43441	CASE, BEVEL GEAR	2	2	2	2	2	2	2	2		
05	T2350-43841	GEAR, 11 BEVEL	2	2	2	2	2	2	2	2		
06	T2350-43011	SHIM (t 0.8)	2	2	2	2	2	2	2	2		
06	T2350-43021	SHIM (t 1.0)	2	2	2	2	2	2	2	2		
06	T2350-43031	SHIM (t 1.2)	2	2	2	2	2	2	2	2		
06	T2350-43041	SHIM (t 1.4)	2	2	2	2	2	2	2	2		
07	04811-50800	O-RING	2	2	2	2	2	2	2	2		
08	05012-01020	PIN, STRAIGHT	2	2	2	2	2	2	2	2		
09	01133-51235	BOLT	8	8	8	8	8	8	8	8		
10	04611-00620	RING, SNAP	2	2	2	2	2	2	2	2		

T490 FRONT AXLE CASE GROUP

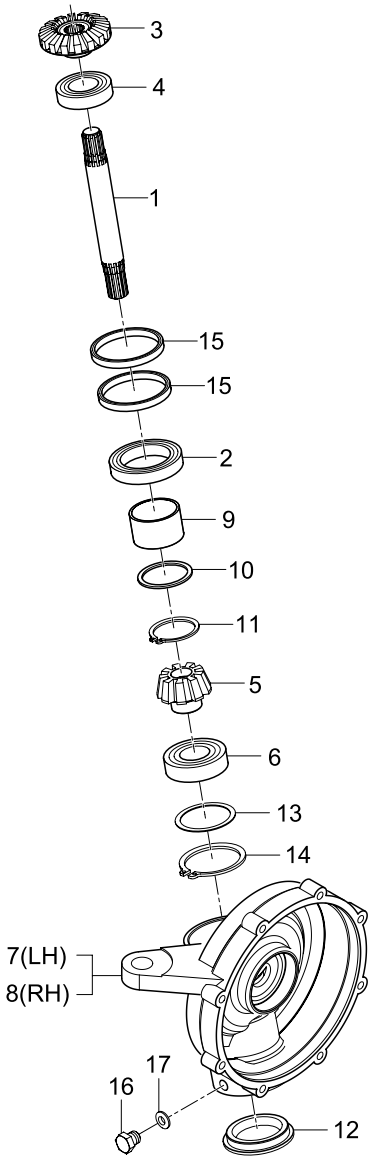

REF. NO	PART. NO	DESCRIPTION	Q'TY								I.C	REMARK
			CK20	CK20J	CK20H	CK20HJ	CK20-EU	CK20J-EU	CK20H-EU	CK20HJ-EU		
01	T2350-43461	SHAFT, BEVEL GEAR	2	2	2	2	2	2	2	2		
02	08101-06910	BEARING, BALL	2	2	2	2	2	2	2	2		
03	T2350-43831	GEAR, 16 BEVEL	2	2	2	2	2	2	2	2		
04	08101-06006	BEARING, BALL	2	2	2	2	2	2	2	2		
05	T2350-43651	GEAR, 9 BEVEL	2	2	2	2	2	2	2	2		
06	08101-06206	BEARING, BALL	2	2	2	2	2	2	2	2		
07	T2350-43632	CASE, FRONT DIFFERENTIAL CASE (LH)	1	1	1	1	1	1	1	1		
07	T2350-43633	CASE, FRONT DIFFERENTIAL CASE (LH)	1	1	1	1	1	1	1	1		
08	T2350-43642	CASE, FRONT DIFFERENTIAL CASE (RH)	1	1	1	1	1	1	1	1		
08	T2350-43643	CASE, FRONT DIFFERENTIAL CASE (RH)	1	1	1	1	1	1	1	1		
09	C7810-21121	BUSHING	2	2	2	2	2	2	2	2		
10	T2350-43691	SPACER (FRONT DIFFERENTIAL)	2	2	2	2	2	2	2	2		
11	04612-00450	RING, SNAP	2	2	2	2	2	2	2	2		
12	T2350-43541	PLUG	2	2	2	2	2	2	2	2		
13	T2350-43911	SHIM (t 0.1)	2	2	2	2	2	2	2	2		
13	T2350-43921	SHIM (t 0.2)	2	2	2	2	2	2	2	2		
13	T2350-43931	SHIM (t 0.4)	2	2	2	2	2	2	2	2		
13	T2350-43941	SHIM (t 0.8)	2	2	2	2	2	2	2	2		
13	T2350-43951	SHIM (t 1.0)	2	2	2	2	2	2	2	2		
13	T2350-43961	SHIM (t 1.2)	2	2	2	2	2	2	2	2		
14	04611-00620	RING, SNAP	2	2	2	2	2	2	2	2		
15	T2350-43971	SEAL, OIL	4	4	4	4	4	4	4	4		
16	06331-35010	PLUG	2	2	2	2	2	2	2	2		
17	04717-01000	WASHER, SEAL	2	2	2	2	2	2	2	2		

T500 FRONT AXLE GROUP

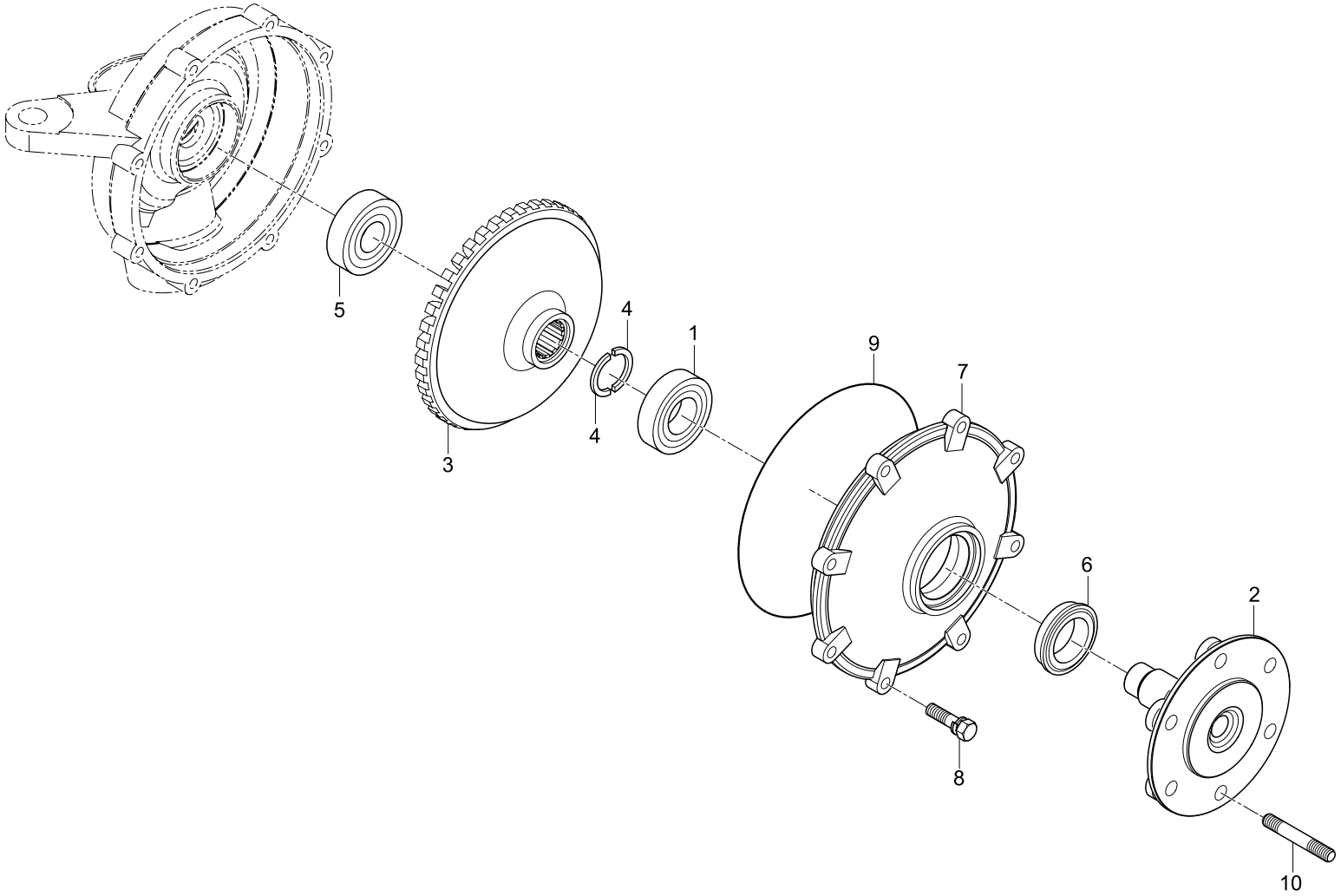

REF. NO	PART. NO	DESCRIPTION	Q'TY								I.C	REMARK
			CK20	CK20J	CK20H	CK20HJ	CK20-EU	CK20J-EU	CK20H-EU	CK20HJ-EU		
01	08101-06206	BEARING, BALL	2	2	2	2	2	2	2	2		
02	T2350-43611	AXLE, FRONT	2	2	2	2	2	2	2	2		
03	T2350-43661	GEAR, 40 BEVEL	2	2	2	2	2	2	2	2		
04	77121-5682-0	PIN, SNAP	4	4	4	4	4	4	4	4		
05	08101-06305	BEARING, BALL	2	2	2	2	2	2	2	2		
06	76802-5691-0	SEAL, OIL	2	2	2	2	2	2	2	2		
07	T2350-43621	COVER, FRONT AXLE	2	2	2	2	2	2	2	2		
08	01123-50825	BOLT	16	16	16	16	16	16	16	16		
09	T2350-43671	O-RING	2	2	2	2	2	2	2	2		
10	01574-51225	STUD	4	4	4	4	4	4	4	4		

T510 STEERING CYLINDER GROUP

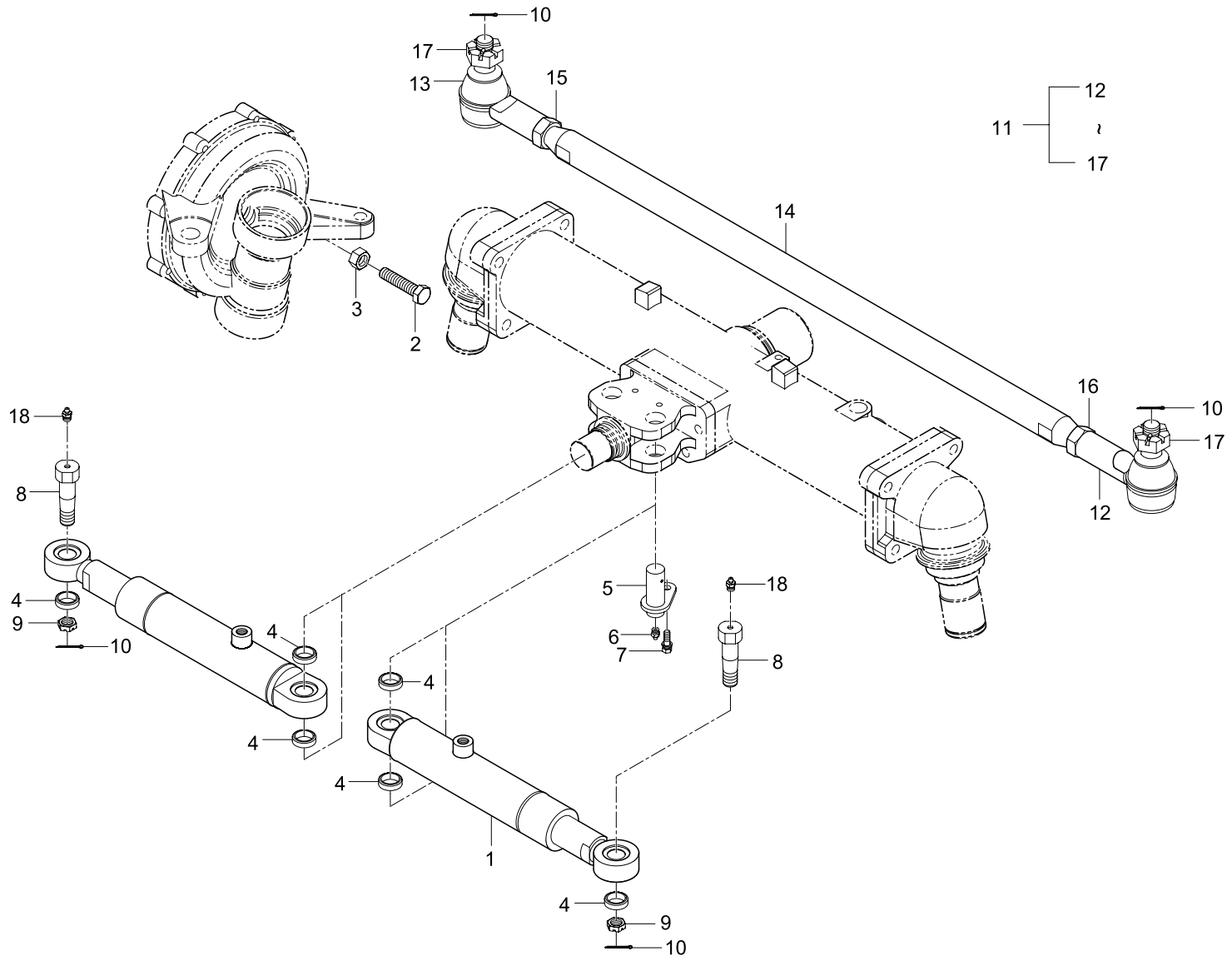

REF. NO	PART. NO	DESCRIPTION	Q'TY								I.C	REMARK
			CK20	CK20J	CK20H	CK20HJ	CK20-EU	CK20J-EU	CK20H-EU	CK20HJ-EU		
01	T2350-31201	STEERING CYLINDER ASS'Y	2	2	2	2	2	2	2	2		
02	01175-51250	BOLT	2	2	2	2	2	2	2	2		
03	02076-50120	NUT	2	2	2	2	2	2	2	2		
04	T4625-31151	SPACER	6	6	6	6	6	6	6	6		
05	T2350-31161	PIN, CYLINDER SUPPORT	2	2	2	2	2	2	2	2		
06	06613-20010	NIPPLE, GREASE	2	2	2	2	2	2	2	2		
06	06613-10010	NIPPLE, GREASE	2	2	2	2	2	2	2	2		
07	01123-50816	BOLT	2	2	2	2	2	2	2	2		
08	T2620-31181	PIN, SUPPORT	2	2	2	2	2	2	2	2		
09	T2610-31311	NUT	2	2	2	2	2	2	2	2		
10	05511-50335	PIN, SPLIT	2	2	2	2	2	2	2	2		
11	T2350-31131	TIE ROD ASS'Y	1	1	1	1	1	1	1	1		
12	T2240-12602	TIE ROD END ASS'Y (RH)	1	1	1	1	1	1	1	1		
13	T2240-12702	TIE ROD END ASS'Y (LH)	1	1	1	1	1	1	1	1		
14	T2350-31141	ROD , TIE	1	1	1	1	1	1	1	1		
15	02174-50160	NUT	1	1	1	1	1	1	1	1		
16	37650-1128-1	NUT	1	1	1	1	1	1	1	1		
17	34150-1283-1	NUT	2	2	2	2	2	2	2	2		
18	06611-15675	NIPPLE, GREASE	2	2	2	2	2	2	2	2		

T520 POWER STEERING UNIT GROUP

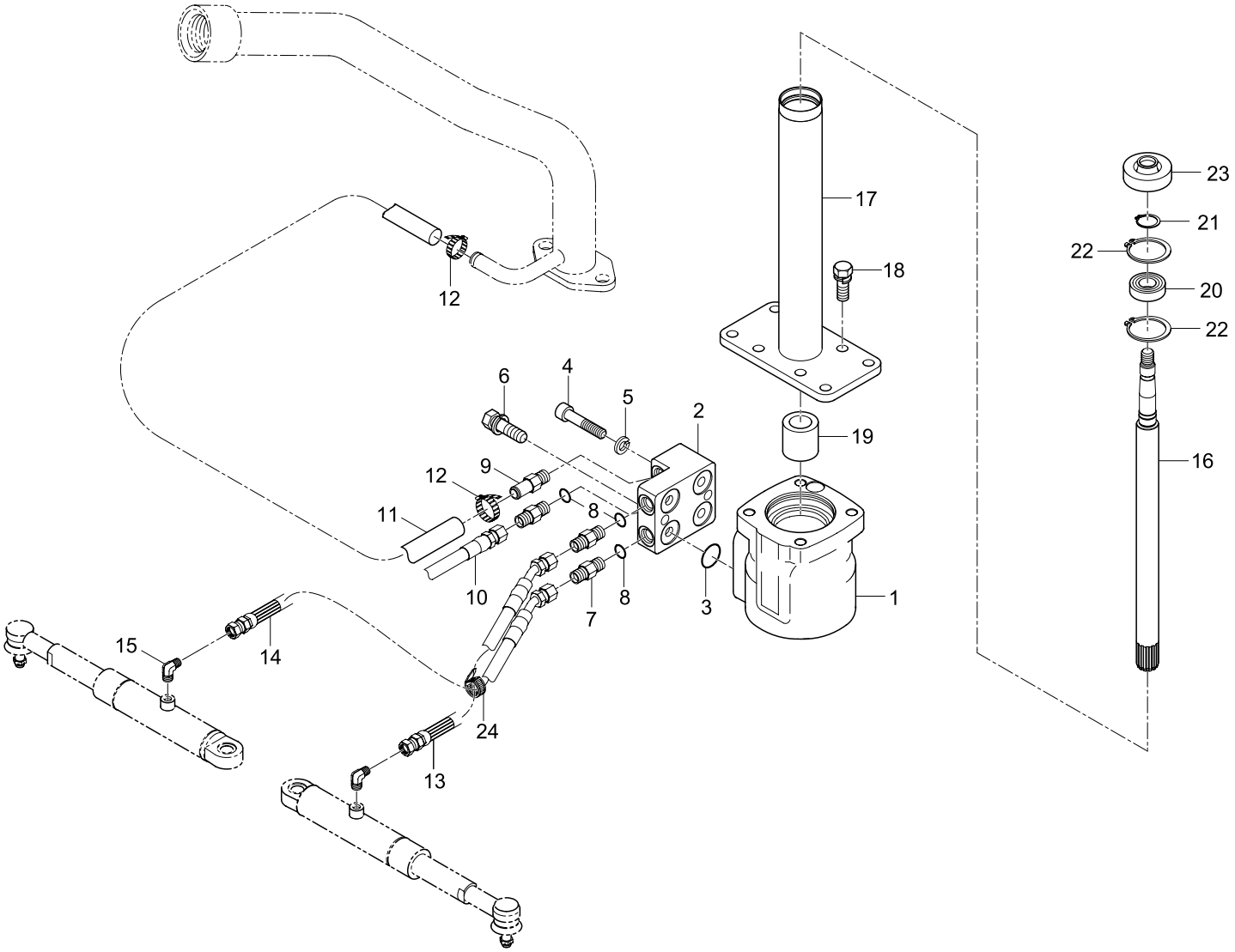

REF. NO	PART. NO	DESCRIPTION	Q'TY								I.C	REMARK
			CK20	CK20J	CK20H	CK20HJ	CK20-EU	CK20J-EU	CK20H-EU	CK20HJ-EU		
01	T2350-66001	UNIT, POWER STEERING	1	1	1	1	1	1	1	1		
01	T2350-66002	UNIT, POWER STEERING	1	1	1	1	1	1	1	1		
02	T2350-66201	BLOCK, HYDRAULIC	1	1	1	1	1	1	1	1		
03	04810-00220	O-RING	4	4	4	4	4	4	4	4		
04	T2350-66221	BOLT	1	1	1	1	1	1	1	1		
05	04512-50100	WASHER, SPRING	1	1	1	1	1	1	1	1		
06	01123-51035	BOLT	1	1	1	1	1	1	1	1		
07	T4620-66161	CONNETOR	3	3	3	3	3	3	3	3		
08	04810-00110	O-RING	3	3	3	3	3	3	3	3		
09	T2350-66181	CONNETOR	1	1	1	1	1	1	1	1		
10	T2350-45001	STEERING HOSE ASS'Y (P)	1	1	1	1	1	1	1	1		
11	T2350-45011	STEERING HOSE ASS'Y (T)	1	1	1	1	1	1	1	1		
12	52200-2523-1	BAND, HOSE	2	2	2	2	2	2	2	2		
13	T2350-45021	STEERING HOSE ASS'Y (L)	1	1	1	1	1	1	1	1		
14	T2350-45031	STEERING HOSE ASS'Y (R)	1	1	1	1	1	1	1	1		
15	T4520-63381	ADAPTER 1, CYLINDER	2	2	2	2	2	2	2	2		
16	T2350-66101	SHAFT, STEERING	1	1	1	1	1	1	1	1		
17	T2350-66011	COLUMN ASS'Y	1	1	1	1	1	1	1	1		
17	T2350-66012	COLUMN ASS'Y	1	1	1	1	1	1	1	1		
18	01123-51030	BOLT	4	4	4	4	4	4	4	4		
19	T4260-50100	RUBBER, CUSHION	1	1	1	1	1	1	1	1		
20	08111-06003	BEARING, BALL	1	1	1	1	1	1	1	1		
21	04612-00170	RING, SNAP	1	1	1	1	1	1	1	1		
22	04611-00350	RING, SNAP	2	2	2	2	2	2	2	2		
23	T2440-16351	SEAL, OIL	1	1	1	1	1	1	1	1		

REF. NO	PART. NO	DESCRIPTION	Q'TY								I.C	REMARK
			CK20	CK20J	CK20H	CK20HJ	CK20-EU	CK20J-EU	CK20H-EU	CK20HJ-EU		
24	T4520-82561	BAND, CORD	4	4	4	4	4	4	4	4		

T530 FRONT AXLE BRACKET GROUP

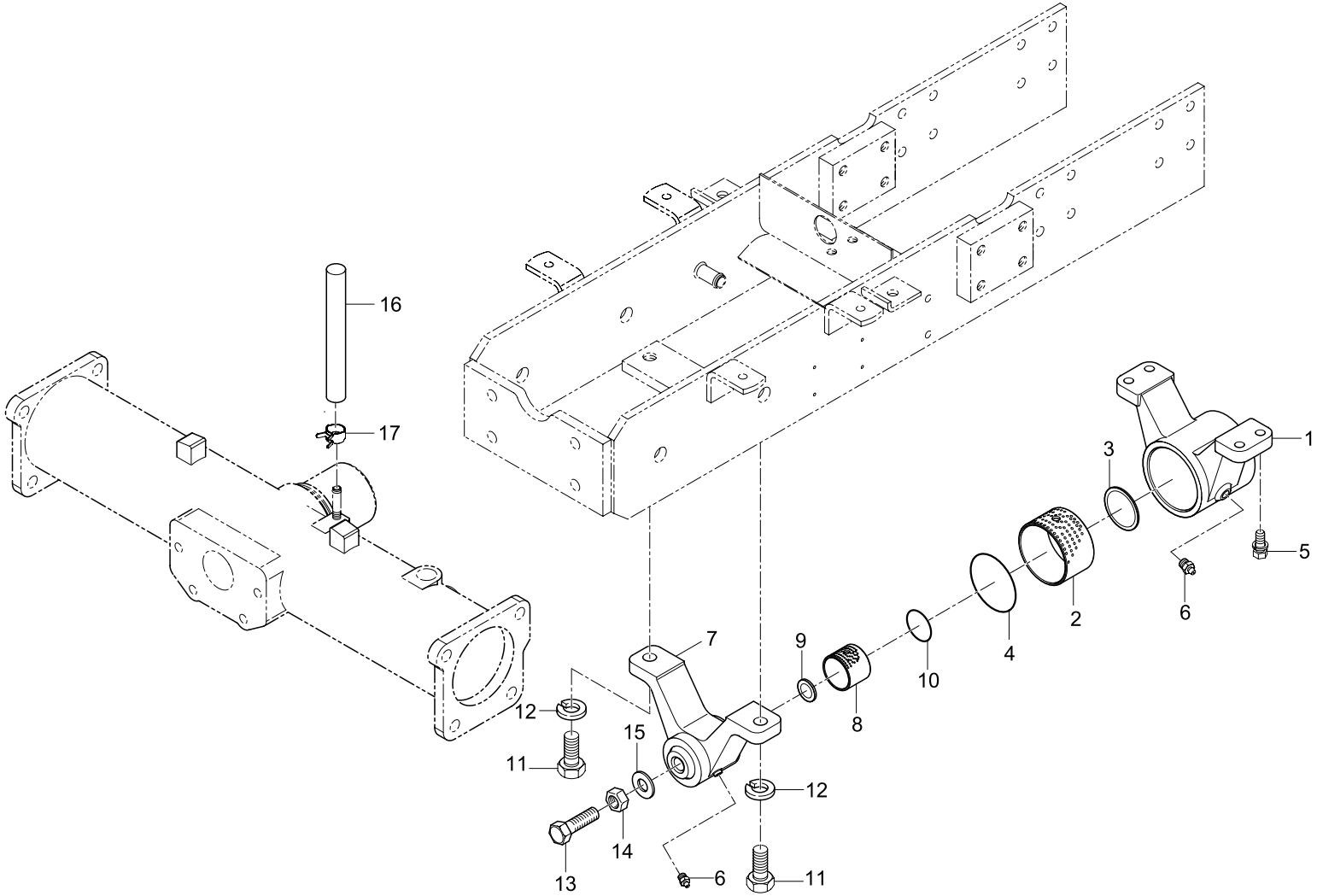

REF. NO	PART. NO	DESCRIPTION	Q'TY								I.C	REMARK
			CK20	CK20J	CK20H	CK20HJ	CK20-EU	CK20J-EU	CK20H-EU	CK20HJ-EU		
01	T2350-41621	BRACKET, REAR	1	1	1	1	1	1	1	1		
01	T2350-41622	BRACKET, REAR	1	1	1	1	1	1	1	1		
02	T4520-41681	BUSHING, DX	1	1	1	1	1	1	1	1		
03	T2350-44641	COLLAR, THRUST	1	1	1	1	1	1	1	1		
04	04811-50650	O-RING	1	1	1	1	1	1	1	1		
05	01133-51030	BOLT	4	4	4	4	4	4	4	4		
06	06613-10010	NIPPLE, GREASE	2	2	2	2	2	2	2	2		
07	T2350-41611	BRACKET, FRONT	1	1	1	1	1	1	1	1		
08	T2350-41681	BUSHING, DX	1	1	1	1	1	1	1	1		
09	T2305-44751	COLLAR, THRUST	1	1	1	1	1	1	1	1		
10	04811-00340	O-RING	1	1	1	1	1	1	1	1		
11	01176-51430	BOLT	2	2	2	2	2	2	2	2		
12	04512-50140	WASHER, SPRING	2	2	2	2	2	2	2	2		
13	38630-4476-1	BOLT, CONTROL	1	1	1	1	1	1	1	1		
14	02172-50160	NUT	1	1	1	1	1	1	1	1		
15	38440-4475-1	WASHER, SEAL	1	1	1	1	1	1	1	1		
16	T2350-42171	HOSE, OVER FLOW	1	1	1	1	1	1	1	1		
17	15301-7247-0	CLIP, HOSE	1	1	1	1	1	1	1	1		

T540 PROPELLER SHAFT GROUP

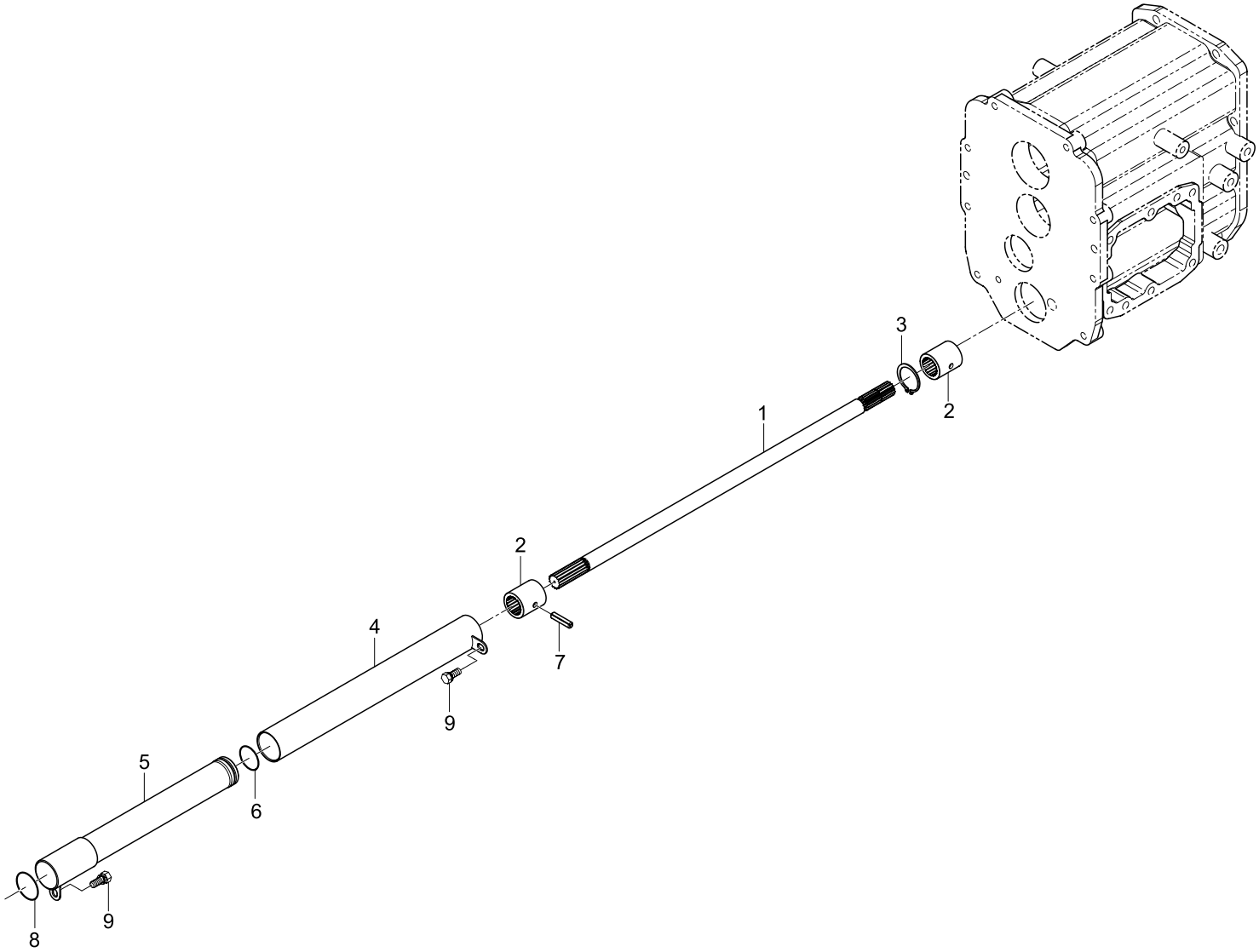

REF. NO	PART. NO	DESCRIPTION	Q'TY								I.C	REMARK
			CK20	CK20J	CK20H	CK20HJ	CK20-EU	CK20J-EU	CK20H-EU	CK20HJ-EU		
01	T2350-44511	SHAFT, PROPELLER	1	1	1	1	1	1	1	1		
02	44512-1373-3	COUPLING	2	2	2	2	2	2	2	2		
03	04612-00200	RING, SNAP	1	1	1	1	1	1	1	1		
04	T2350-44611	COVER 1, PROPELLER SAHFT	1	1			1	1				
04	T2360-44611	COVER 1, PROPELLER SAHFT			1	1			1	1		
05	T2350-44621	COVER 2, PROPELLER SAHFT	1	1	1	1	1	1	1	1		
06	04811-06350	O-RING	1	1	1	1	1	1	1	1		
07	05411-00528	PIN, SPRING	1	1	1	1	1	1	1	1		
08	04811-00420	O-RING	1	1	1	1	1	1	1	1		
09	01123-50816	BOLT	2	2	2	2	2	2	2	2		

T550 FRONT WHEEL GROUP

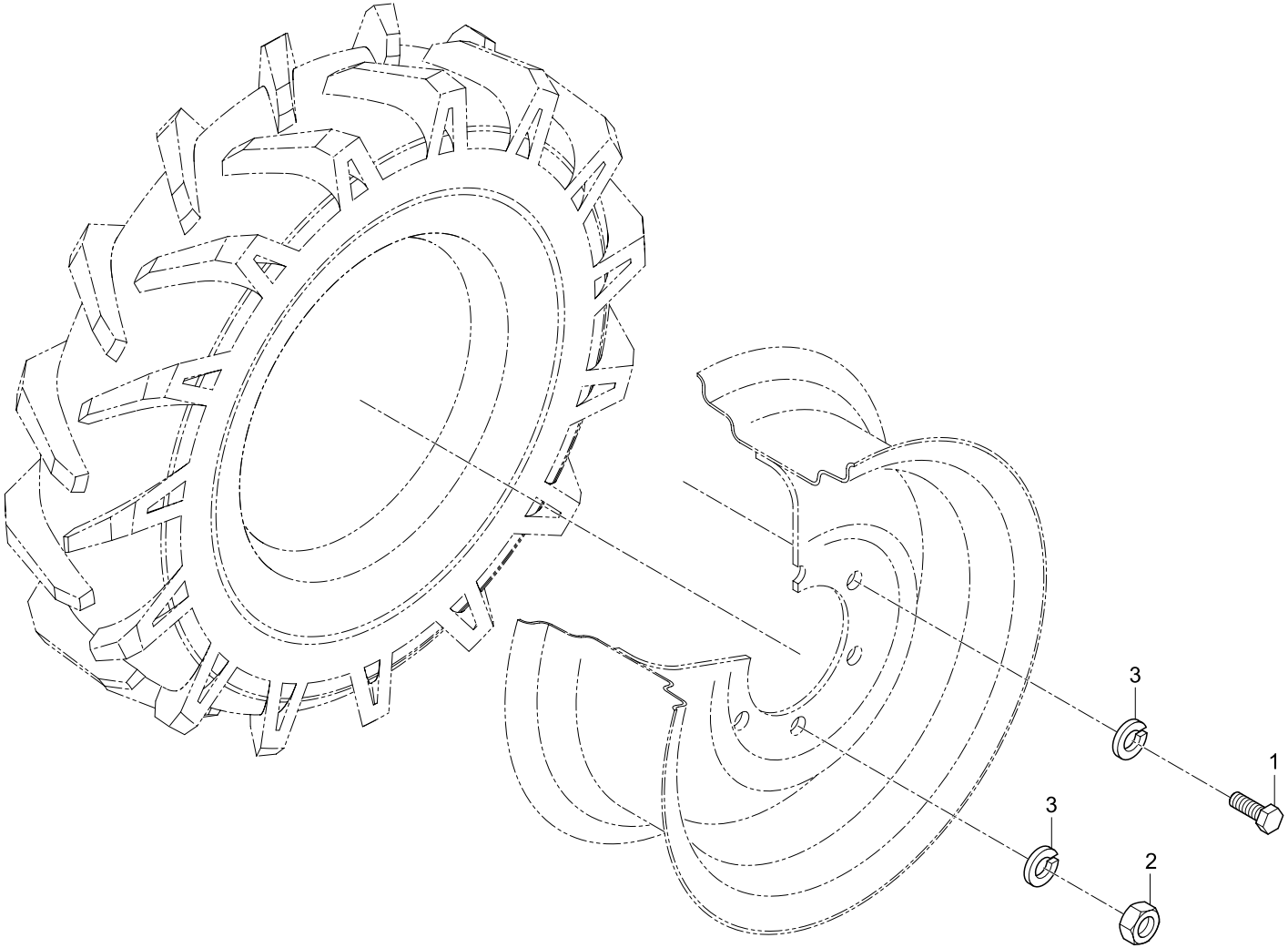

REF. NO	PART. NO	DESCRIPTION	Q'TY								I.C	REMARK
			CK20	CK20J	CK20H	CK20HJ	CK20-EU	CK20J-IT	CK20J-EN	CK20J-FR		
01	01173-51225	BOLT	8	8	8	8	8	8	8	8		
02	02174-50120	NUT	4	4	4	4	4	4	4	4		
03	04512-50120	WASHER, SPRING	12	12	12	12	12	12	12	12		

T551 FRONT WHEEL GROUP

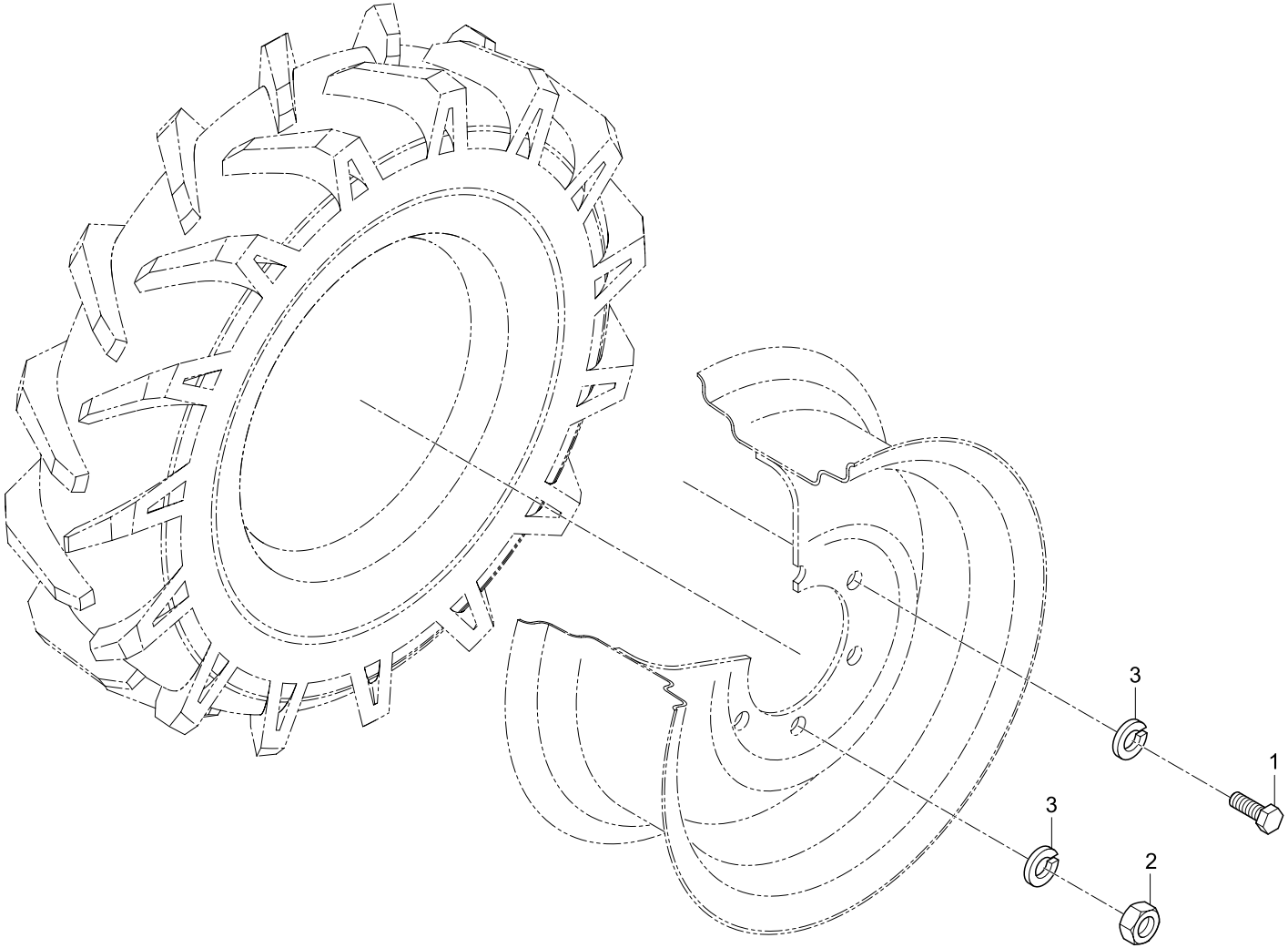

REF. NO	PART. NO	DESCRIPTION	Q'TY								I.C	REMARK
			CK20H-EU	CK20HJ-IT	CK20HJ-EN	CK20H-SP	CK20HJ-FR					
01	01173-51225	BOLT	8	8	8	8	8					
02	02174-50120	NUT	4	4	4	4	4					
03	04512-50120	WASHER, SPRING	12	12	12	12	12					

T555 FRONT WHEEL GROUP (Option)

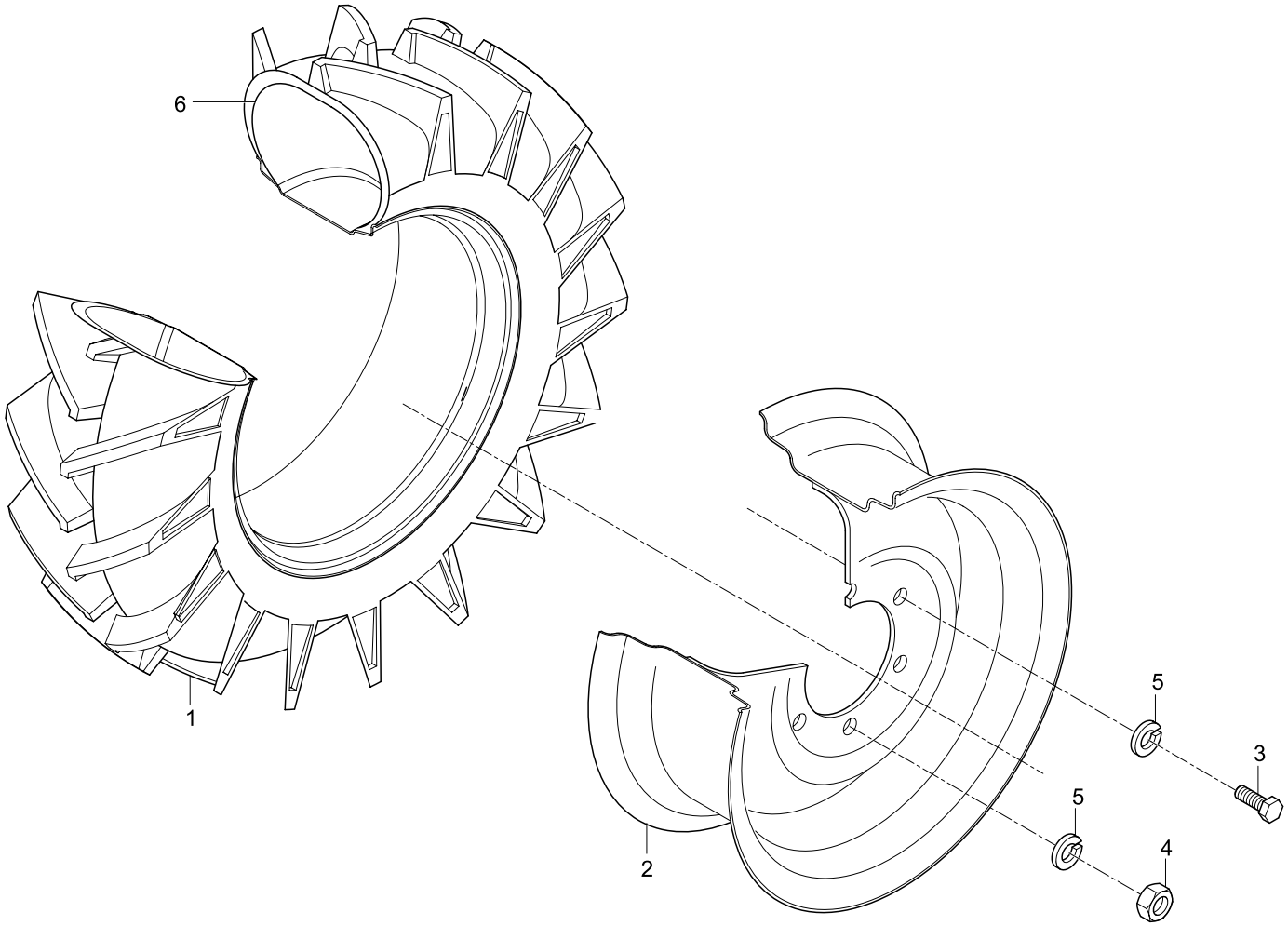

REF. NO	PART. NO	DESCRIPTION	Q'TY								I.C	REMARK
			CK20J-AU	CK20-NL	CK20J-NL	CK20-SP	CK20J-SP	CK20HJ-AU	CK20H-NL	CK20HJ-NL		
01	T2350-47551	TIRE, FRONT (6-12)	2	2	2	2	2	2	2	2		
01	T2350-47531	TIRE, FRONT (6-12)	2	2	2	2	2	2	2	2		
02	T2350-47501	RIM (6-12)	2	2	2	2	2	2	2	2		
02	T2305-43731	WHEEL, FRONT	2	2	2	2	2	2	2	2		
03	01173-51225	BOLT	8	8	8	8	8	8	8	8		
04	02174-50120	NUT	4	4	4	4	4	4	4	4		
05	04512-50120	WASHER, SPRING	12	12	12	12	12	12	12	12		
06	T2305-47561	TUBE(6-12)	2	2	2	2	2	2	2	2		

T556 FRONT WHEEL GROUP (Option)

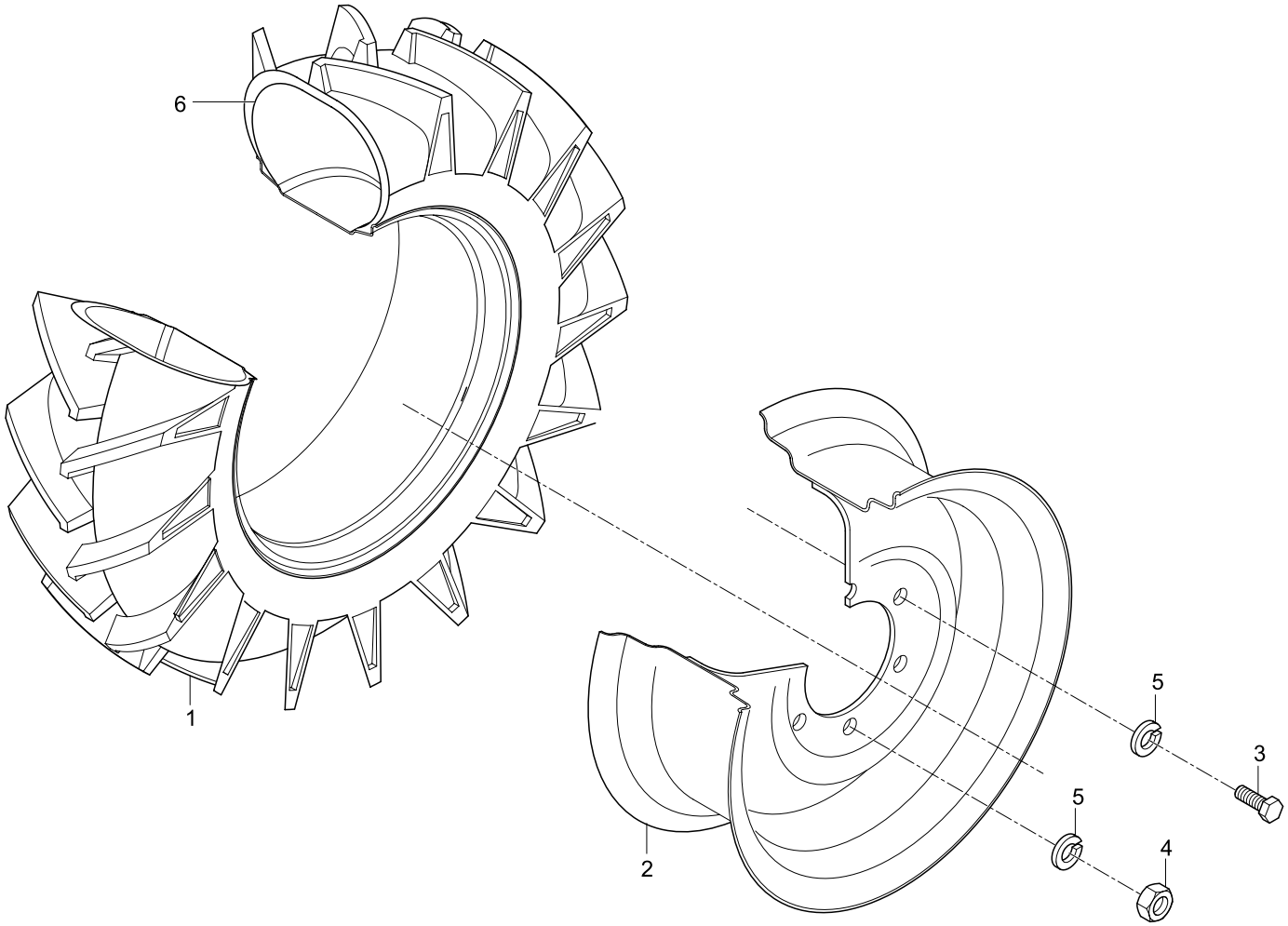

REF. NO	PART. NO	DESCRIPTION	Q'TY								I.C	REMARK
			CK20HJ-SP									
01	T2350-47551	TIRE, FRONT (6-12)	2									
01	T2350-47531	TIRE, FRONT (6-12)	2									
02	T2350-47501	RIM (6-12)	2									
02	T2305-43731	WHEEL, FRONT	2									
03	01173-51225	BOLT	8									
04	02174-50120	NUT	4									
05	04512-50120	WASHER, SPRING	12									
06	T2305-47561	TUBE(6-12)	2									

T560-1 HYDRAULIC CYLINDER GROUP

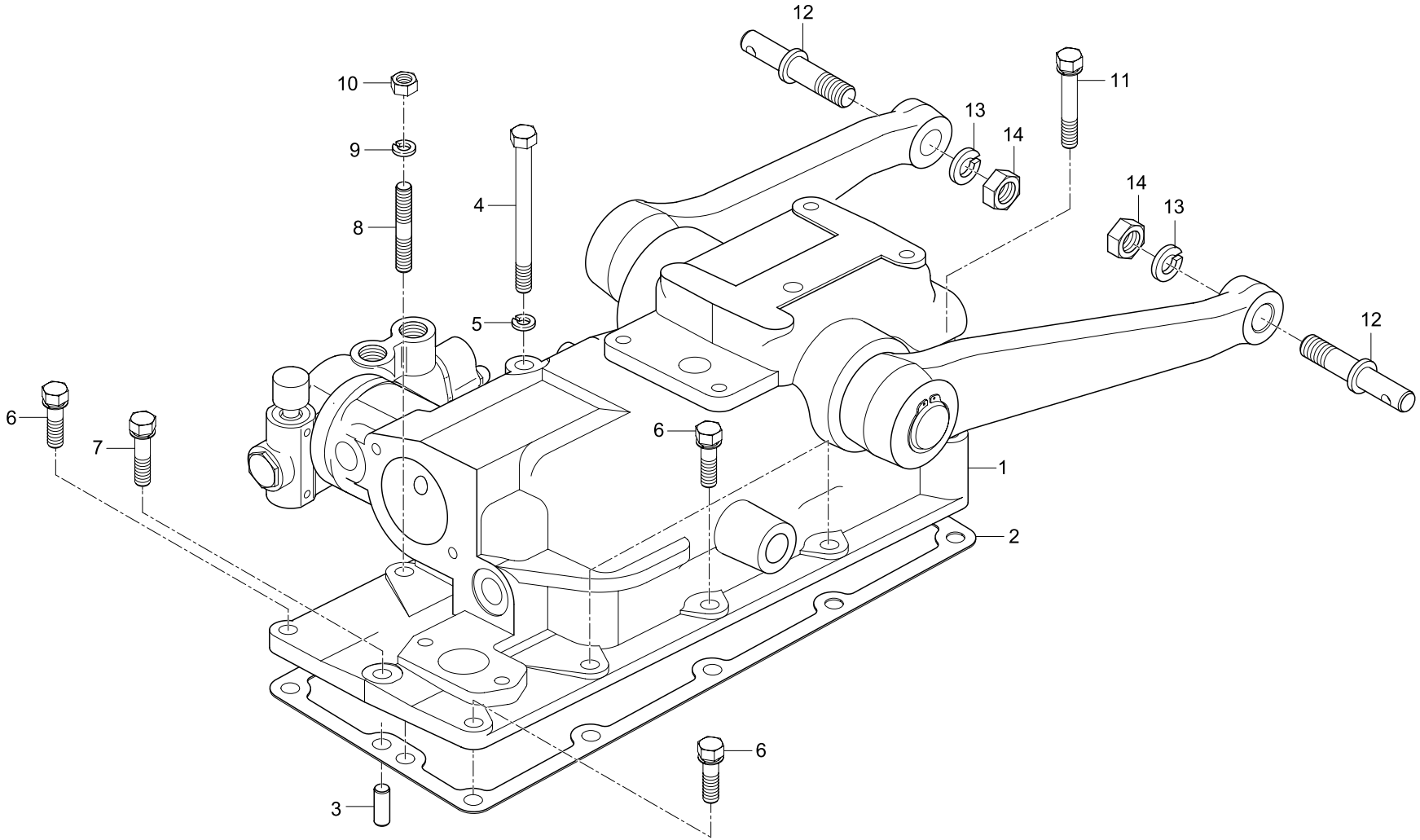

REF. NO	PART. NO	DESCRIPTION	Q'TY								I.C	REMARK
			CK20J-AU	CK20-NL	CK20J-NL	CK20J-IT	CK20J-EN	CK20J-SP	CK20J-FR	CK20HJ-AU		
01	T2350-31001	HYDRAULIC CYLINDER ASS'Y	1	1	1	1	1	1	1	1		
02	T2350-37121	PACKING	1	1	1	1	1	1	1	1		
03	05012-01018	PIN, STRAIGHT	1	1	1	1	1	1	1	1		
04	T2305-37171	BOLT	1	1	1	1	1	1	1	1		
05	04512-50100	WASHER, SPRING	1	1	1	1	1	1	1	1		
06	01133-51030	BOLT	6	6	6	6	6	6	6	6		
07	01133-51035	BOLT	1	1	1	1	1	1	1	1		
08	01517-51030	STUD	1	1	1	1	1	1	1	1		
09	04512-50100	WASHER, SPRING	1	1	1	1	1	1	1	1		
10	02176-50100	NUT	1	1	1	1	1	1	1	1		
11	01133-51065	BOLT	2	2	2	2	2	2	2	2		
12	T2350-37691	PIN	2	2	2	2	2	2	2	2		
13	04512-50160	WASHER, SPRING	2	2	2	2	2	2	2	2		
14	02176-50160	NUT	2	2	2	2	2	2	2	2		

T561 HYDRAULIC CYLINDER GROUP

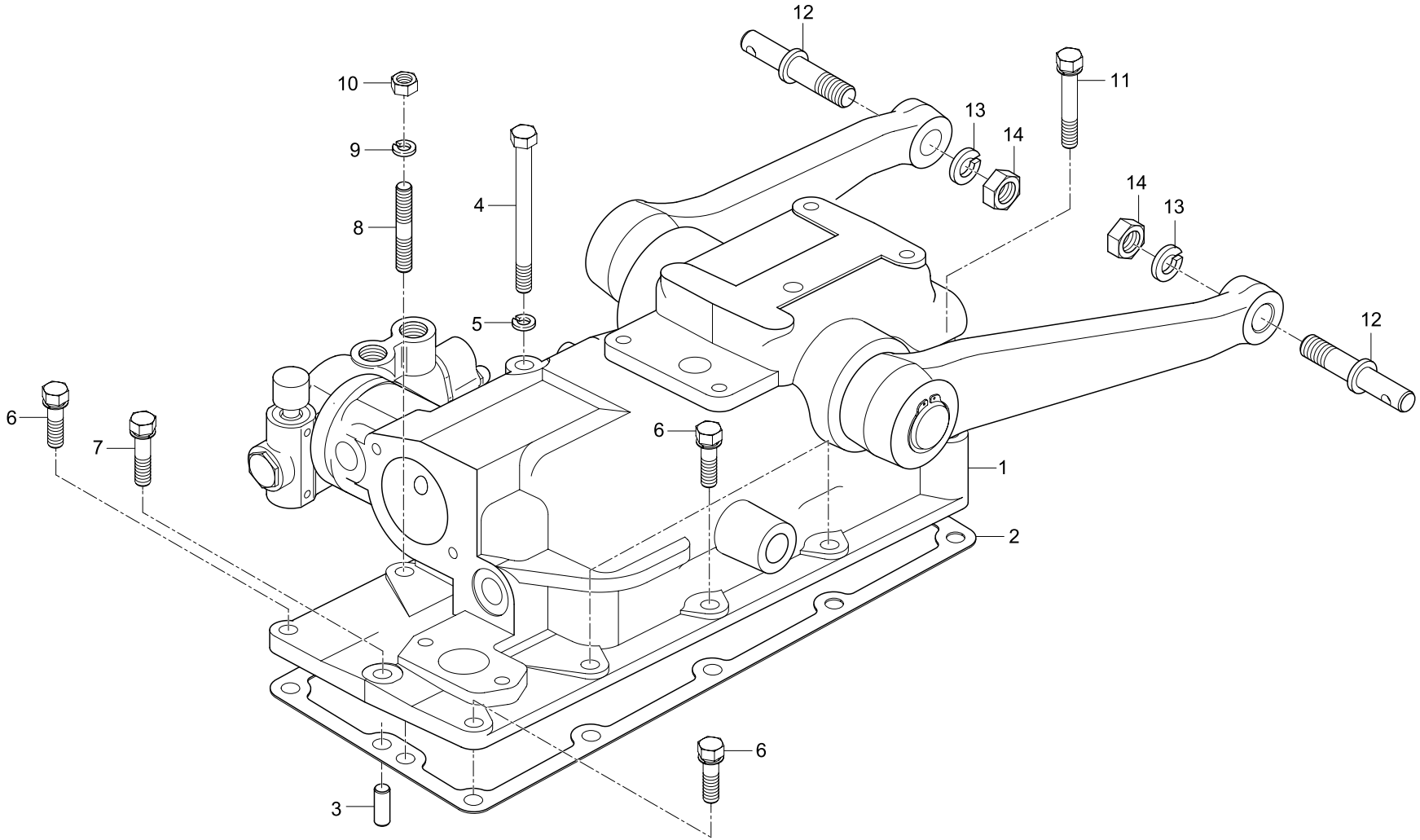

REF. NO	PART. NO	DESCRIPTION	Q'TY								I.C	REMARK
			CK20H-NL	CK20HJ-NL	CK20HJ-IT	CK20HJ-EN	CK20HJ-SP	CK20HJ-FR	CK20-SP	CK20H-SP		
01	T2350-31001	HYDRAULIC CYLINDER ASS'Y	1	1	1	1	1	1	1	1		
02	T2350-37121	PACKING	1	1	1	1	1	1	1	1		
03	05012-01018	PIN, STRAIGHT	1	1	1	1	1	1	1	1		
04	T2305-37171	BOLT	1	1	1	1	1	1	1	1		
05	04512-50100	WASHER, SPRING	1	1	1	1	1	1	1	1		
06	01133-51030	BOLT	6	6	6	6	6	6	6	6		
07	01133-51035	BOLT	1	1	1	1	1	1	1	1		
08	01517-51030	STUD	1	1	1	1	1	1	1	1		
09	04512-50100	WASHER, SPRING	1	1	1	1	1	1	1	1		
10	02176-50100	NUT	1	1	1	1	1	1	1	1		
11	01133-51065	BOLT	2	2	2	2	2	2	2	2		
12	T2350-37691	PIN	2	2	2	2	2	2	2	2		
13	04512-50160	WASHER, SPRING	2	2	2	2	2	2	2	2		
14	02176-50160	NUT	2	2	2	2	2	2	2	2		

T560-2 HYDRAULIC CYLINDER GROUP

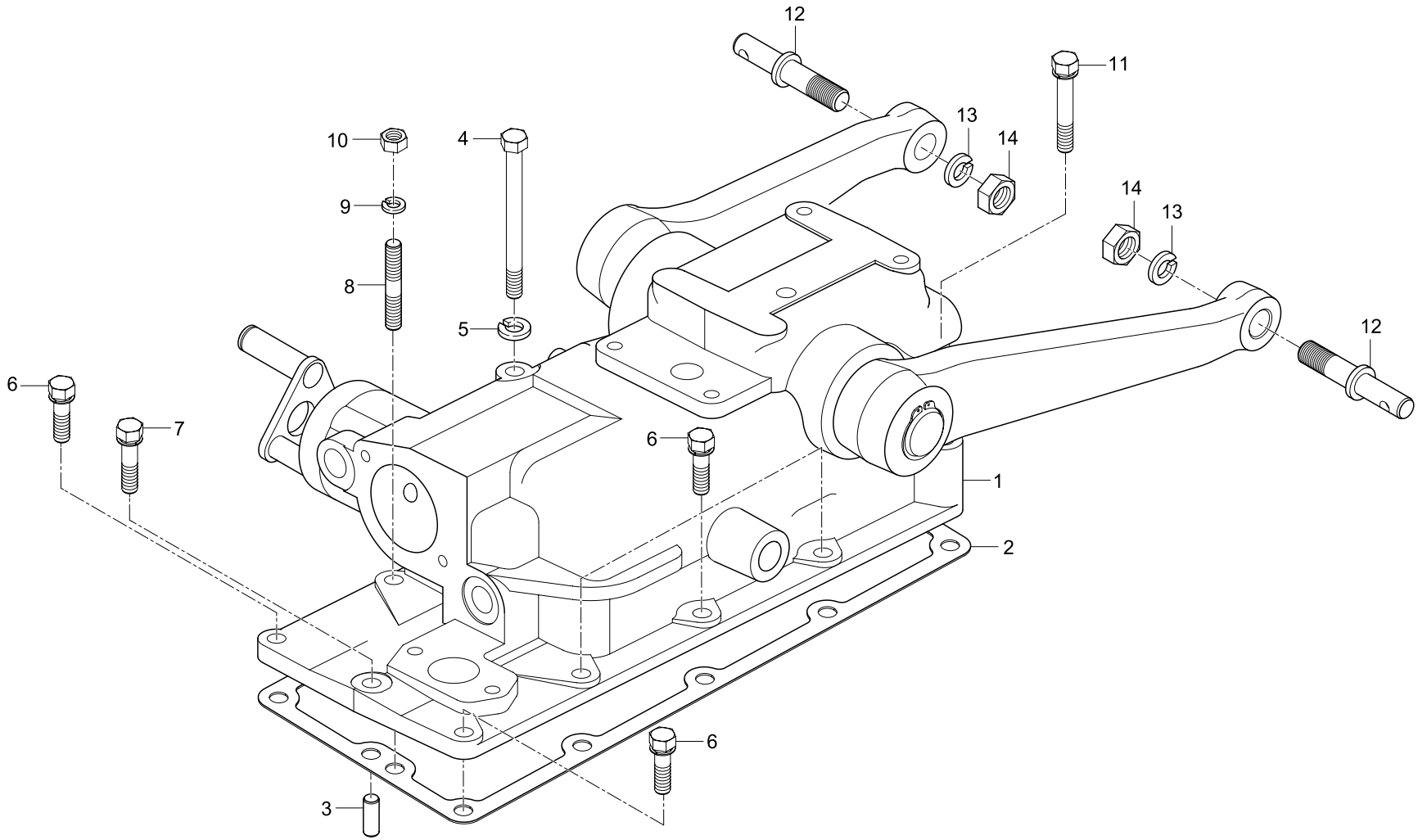

REF. NO	PART. NO	DESCRIPTION	Q'TY								I.C	REMARK
			CK20	CK20J	CK20H	CK20HJ	CK20-EU	CK20H-EU				
01	T2350-31101	HYDRAULIC CYLINDER ASS'Y	1	1	1	1	1	1				
02	T2350-37121	PACKING	1	1	1	1	1	1				
03	05012-01018	PIN, STRAIGHT	1	1	1	1	1	1				
04	T2305-37171	BOLT	1	1	1	1	1	1				
05	04512-50100	WASHER, SPRING	1	1	1	1	1	1				
06	01133-51030	BOLT	6	6	6	6	6	6				
07	01133-51035	BOLT	1	1	1	1	1	1				
08	01517-51030	STUD	1	1	1	1	1	1				
09	04512-50100	WASHER, SPRING	1	1	1	1	1	1				
10	02176-50100	NUT	1	1	1	1	1	1				
11	01133-51065	BOLT	2	2	2	2	2	2				
12	T2350-37691	PIN	2	2	2	2	2	2				
13	04512-50160	WASHER, SPRING	2	2	2	2	2	2				
14	02176-50160	NUT	2	2	2	2	2	2				

T570-1 HYDRAULIC CYLINDER BODY GROUP

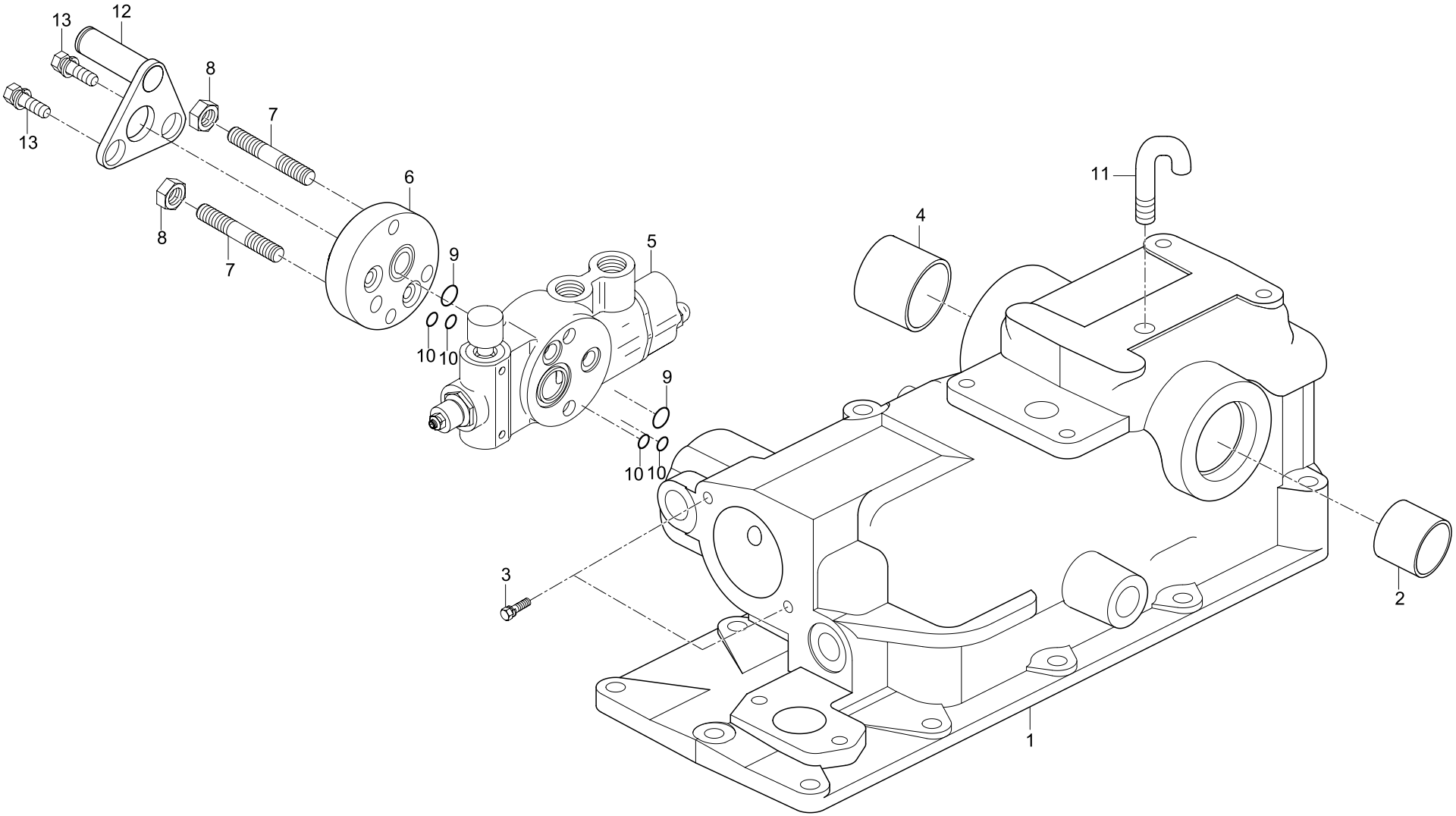

REF. NO	PART. NO	DESCRIPTION	Q'TY								I.C	REMARK
			CK20J-AU	CK20-NL	CK20J-NL	CK20J-IT	CK20J-EN	CK20J-SP	CK20J-FR	CK20HJ-AU		
01	T2350-37112	BODY, HYDRAULIC CYLINDER	1	1	1	1	1	1	1	1		
02	08511-03540	BUSHING	1	1	1	1	1	1	1	1		
03	01123-50835	BOLT	2	2	2	2	2	2	2	2		
04	08511-04040	BUSHING	1	1	1	1	1	1	1	1		
05	008264	VALVE, DETENT DOUBLE	1	1	1	1	1	1	1	1		
06	T2350-37471	COVER	1	1	1	1	1	1	1	1		
07	T2350-37871	STUD	2	2	2	2	2	2	2	2		
07	T2610-37871	STUD	2	2	2	2	2	2	2	2		
08	41182-5151-1	NUT	2	2	2	2	2	2	2	2		
09	04811-06250	O-RING	1	1	1	1	1	1	1	1		
10	04810-00120	O-RING	2	2	2	2	2	2	2	2		
11	76591-1135-1	TUBE, AIRBREATHER	1	1	1	1	1	1	1	1		
12	T2350-65461	HOLDER, LEVER (A)	1	1	1	1	1	1	1	1		
13	01123-50820	BOLT	2	2	2	2	2	2	2	2		

T571 HYDRAULIC CYLINDER BODY GROUP

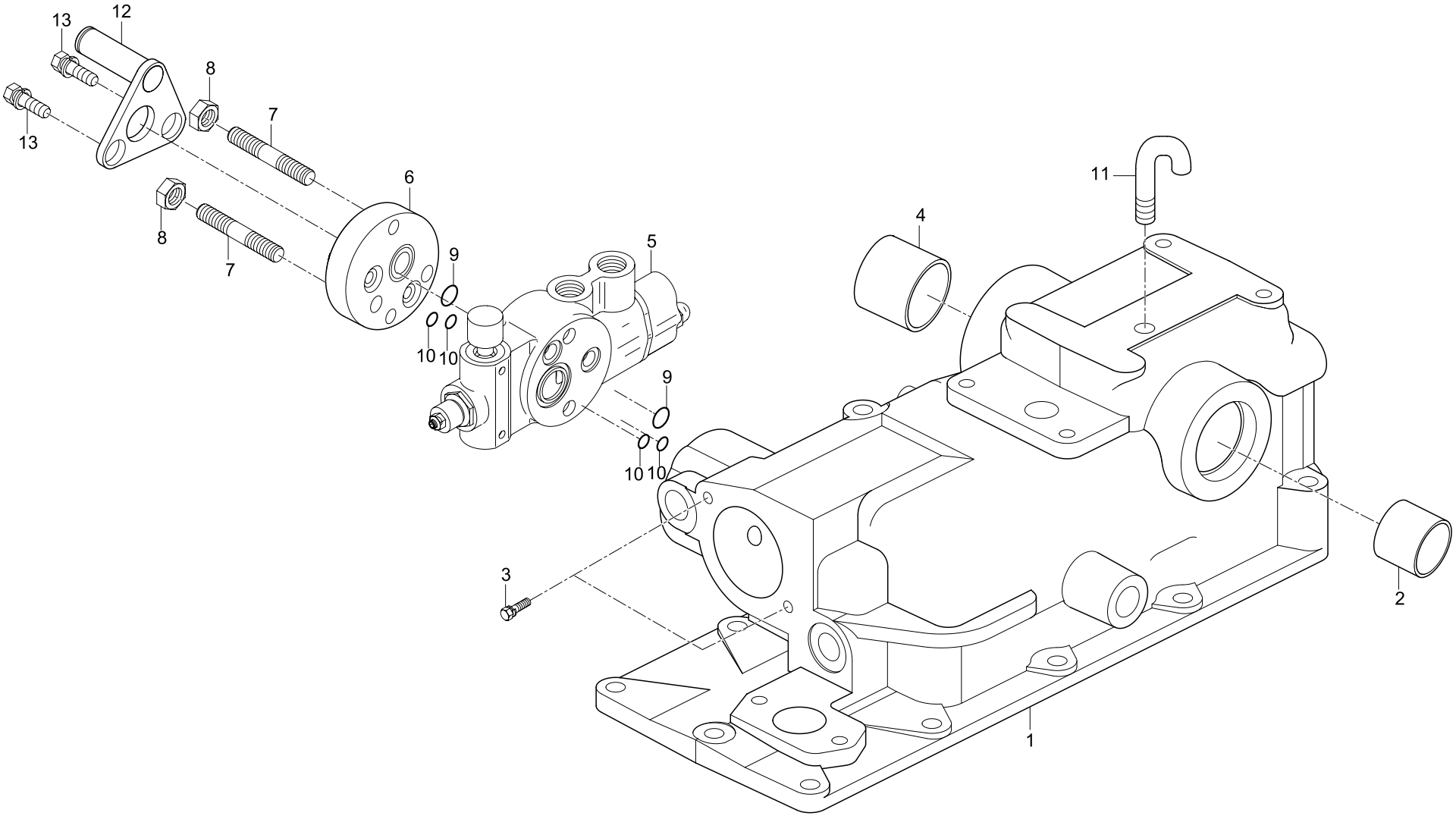

REF. NO	PART. NO	DESCRIPTION	Q'TY								I.C	REMARK
			CK20H-NL	CK20HJ-NL	CK20HJ-IT	CK20HJ-EN	CK20HJ-SP	CK20HJ-FR	CK20-SP	CK20H-SP		
01	T2350-37112	BODY, HYDRAULIC CYLINDER	1	1	1	1	1	1	1	1		
02	08511-03540	BUSHING	1	1	1	1	1	1	1	1		
03	01123-50835	BOLT	2	2	2	2	2	2	2	2		
04	08511-04040	BUSHING	1	1	1	1	1	1	1	1		
05	008264	VALVE, DETENT DOUBLE	1	1	1	1	1	1	1	1		
06	T2350-37471	COVER	1	1	1	1	1	1	1	1		
07	T2350-37871	STUD	2	2	2	2	2	2	2	2		
07	T2610-37871	STUD	2	2	2	2	2	2	2	2		
08	41182-5151-1	NUT	2	2	2	2	2	2	2	2		
09	04811-06250	O-RING	1	1	1	1	1	1	1	1		
10	04810-00120	O-RING	2	2	2	2	2	2	2	2		
11	76591-1135-1	TUBE, AIRBREATHER	1	1	1	1	1	1	1	1		
12	T2350-65461	HOLDER, LEVER (A)	1	1	1	1	1	1	1	1		
13	01123-50820	BOLT	2	2	2	2	2	2	2	2		

T570-2 HYDRAULIC CYLINDER BODY GROUP

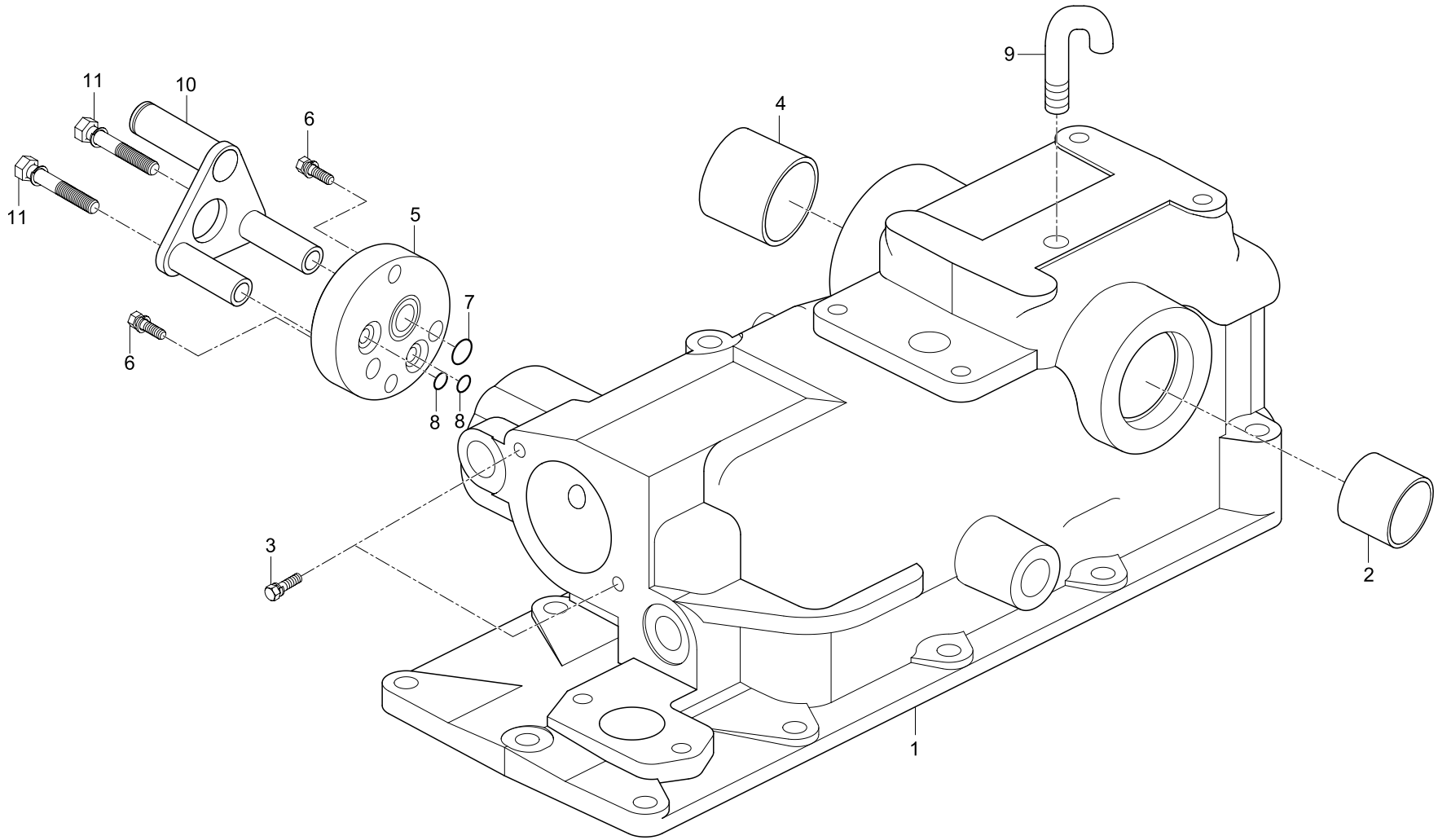

REF. NO	PART. NO	DESCRIPTION	Q'TY								I.C	REMARK
			CK20	CK20J	CK20H	CK20HJ	CK20-EU	CK20H-EU				
01	T2350-37112	BODY, HYDRAULIC CYLINDER	1	1	1	1	1	1				
02	08511-03540	BUSHING	1	1	1	1	1	1				
03	01133-50835	BOLT	2	2	2	2	2	2				
04	08511-04040	BUSHING	1	1	1	1	1	1				
05	T2350-37471	COVER	1	1	1	1	1	1				
06	01123-51035	BOLT	2	2	2	2	2	2				
07	04811-06250	O-RING	1	1	1	1	1	1				
08	04810-00120	O-RING	2	2	2	2	2	2				
09	76591-1135-1	TUBE, AIRBREATHER	1	1	1	1	1	1				
10	T2350-65471	HOLDER, LEVER (B)	1	1	1	1	1	1				
11	01123-50860	BOLT	2	2	2	2	2	2				

T580 HYDRAULIC LIFT ARM GROUP

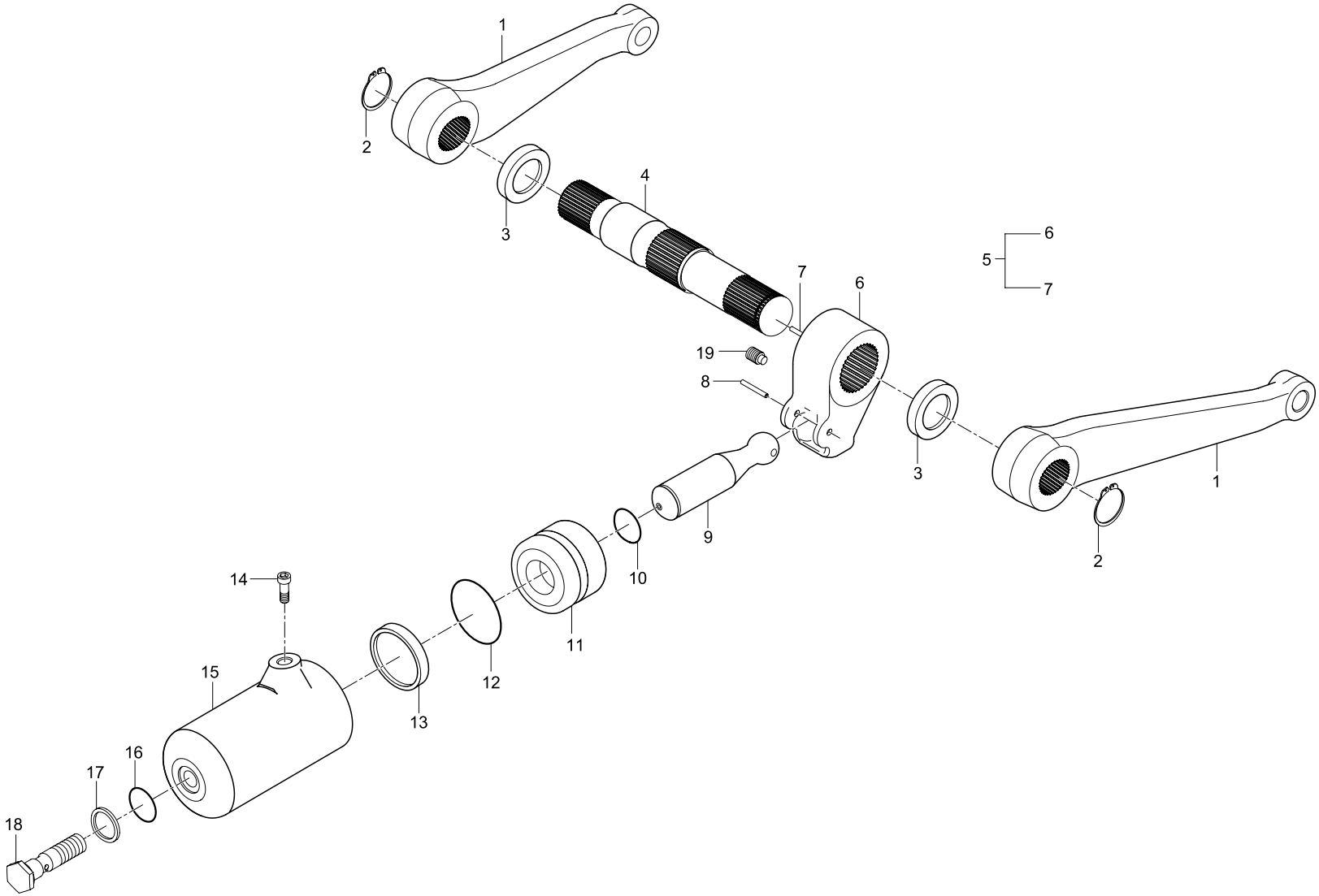

REF. NO	PART. NO	DESCRIPTION	Q'TY								I.C	REMARK
			CK20	CK20J	CK20H	CK20HJ	CK20-EU	CK20J-EU	CK20H-EU	CK20HJ-EU		
01	T2350-37611	ARM, LIFT	2	2	2	2	2	2	2	2		
02	04612-00350	RING, SNAP	2	2	2	2	2	2	2	2		
03	09500-35488	SEAL, OIL	2	2	2	2	2	2	2	2		
04	T2350-37432	SHAFT, HYDRAULIC ARM	1	1	1	1	1	1	1	1		
05	T2350-37412	HYDRAULIC ARM ASS'Y	1	1	1	1	1	1	1	1		
06	T2350-37442	ARM, HYDRAULIC	1	1	1	1	1	1	1	1		
07	T2350-37421	PIN	1	1	1	1	1	1	1	1		
08	05411-00640	PIN, SPRING	1	1	1	1	1	1	1	1		
09	T2350-37321	ROD, HYDRAULIC	1	1	1	1	1	1	1	1		
10	04810-00280	O-RING	1	1	1	1	1	1	1	1		
11	T2350-37311	PISTON	1	1	1	1	1	1	1	1		
12	04810-00650	O-RING	1	1	1	1	1	1	1	1		
13	T2350-37331	RING, BACKUP	1	1	1	1	1	1	1	1		
14	T2350-37351	BOLT	1	1	1	1	1	1	1	1		
15	T2350-37301	CYLINDER	1	1	1	1	1	1	1	1		
16	04810-00200	O-RING	1	1	1	1	1	1	1	1		
17	320029000	WASHER, LOCK	1	1	1	1	1	1	1	1		
18	T2350-37361	BOLT, JOINT	1	1	1	1	1	1	1	1		
19	T2350-37451	SCREW, STOPPER	1	1	1	1	1	1	1	1		

T590 HYDRAULIC CONTROL SYSTEM 1 GROUP

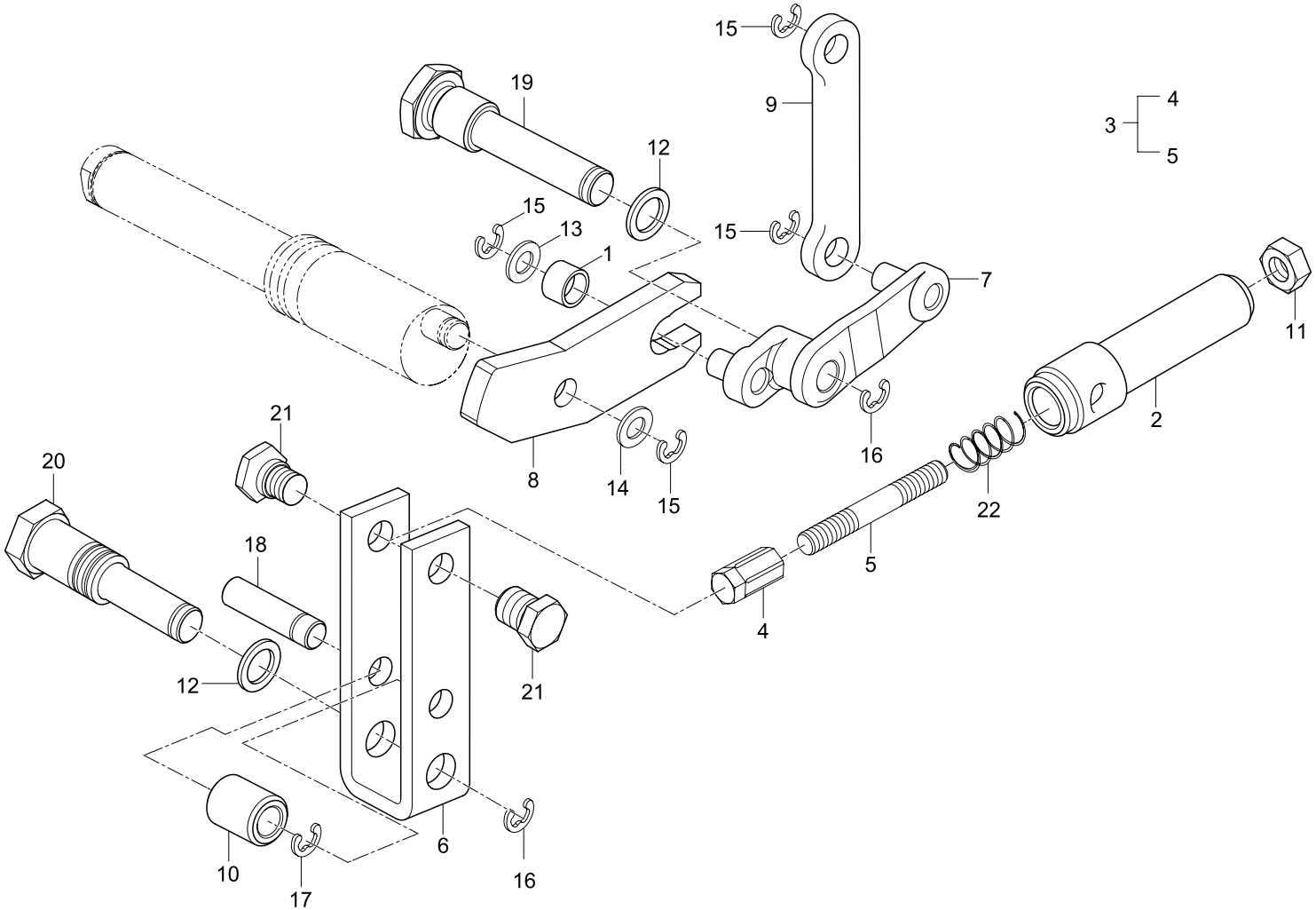

REF. NO	PART. NO	DESCRIPTION	Q'TY								I.C	REMARK
			CK20	CK20J	CK20H	CK20HJ	CK20-EU	CK20J-EU	CK20H-EU	CK20HJ-EU		
01	T2610-39521	ROLLER	1	1	1	1	1	1	1	1		
02	T2350-39601	SET, SPRING	1	1	1	1	1	1	1	1		
03	T2350-39561	PUSH ROD ASS'Y	1	1	1	1	1	1	1	1		
04	T2350-39571	ROD, PUSH	1	1	1	1	1	1	1	1		
05	T2350-39581	STUD	1	1	1	1	1	1	1	1		
06	T2350-39461	LEVER	1	1	1	1	1	1	1	1		
07	T2350-39621	ARM	1	1	1	1	1	1	1	1		
08	T2350-39481	LEVER	1	1	1	1	1	1	1	1		
09	T2350-39611	LINK 3	1	1	1	1	1	1	1	1		
10	T2350-39531	ROLLER 2	1	1	1	1	1	1	1	1		
11	T2670-50981	NUT, LOCK	1	1	1	1	1	1	1	1		
12	04724-00140	WASHER, SEAL	2	2	2	2	2	2	2	2		
13	04012-50080	WASHER, PLAIN	1	1	1	1	1	1	1	1		
14	04011-50080	WASHER, PLAIN	1	1	1	1	1	1	1	1		
15	04613-50060	RING, SNAP	4	4	4	4	4	4	4	4		
16	04613-50070	RING, SNAP	2	2	2	2	2	2	2	2		
17	04613-50050	RING, SNAP	1	1	1	1	1	1	1	1		
18	T2350-39511	PIN	1	1	1	1	1	1	1	1		
19	T2350-39541	PIN, SUPPORT	1	1	1	1	1	1	1	1		
20	T2350-39661	PIN	1	1	1	1	1	1	1	1		
21	T2350-39651	PLUG	2	2	2	2	2	2	2	2		
22	T2350-39671	SPRING	1	1	1	1	1	1	1	1		

T600 HYDRAULIC CONTROL SYSTEM 2 GROUP

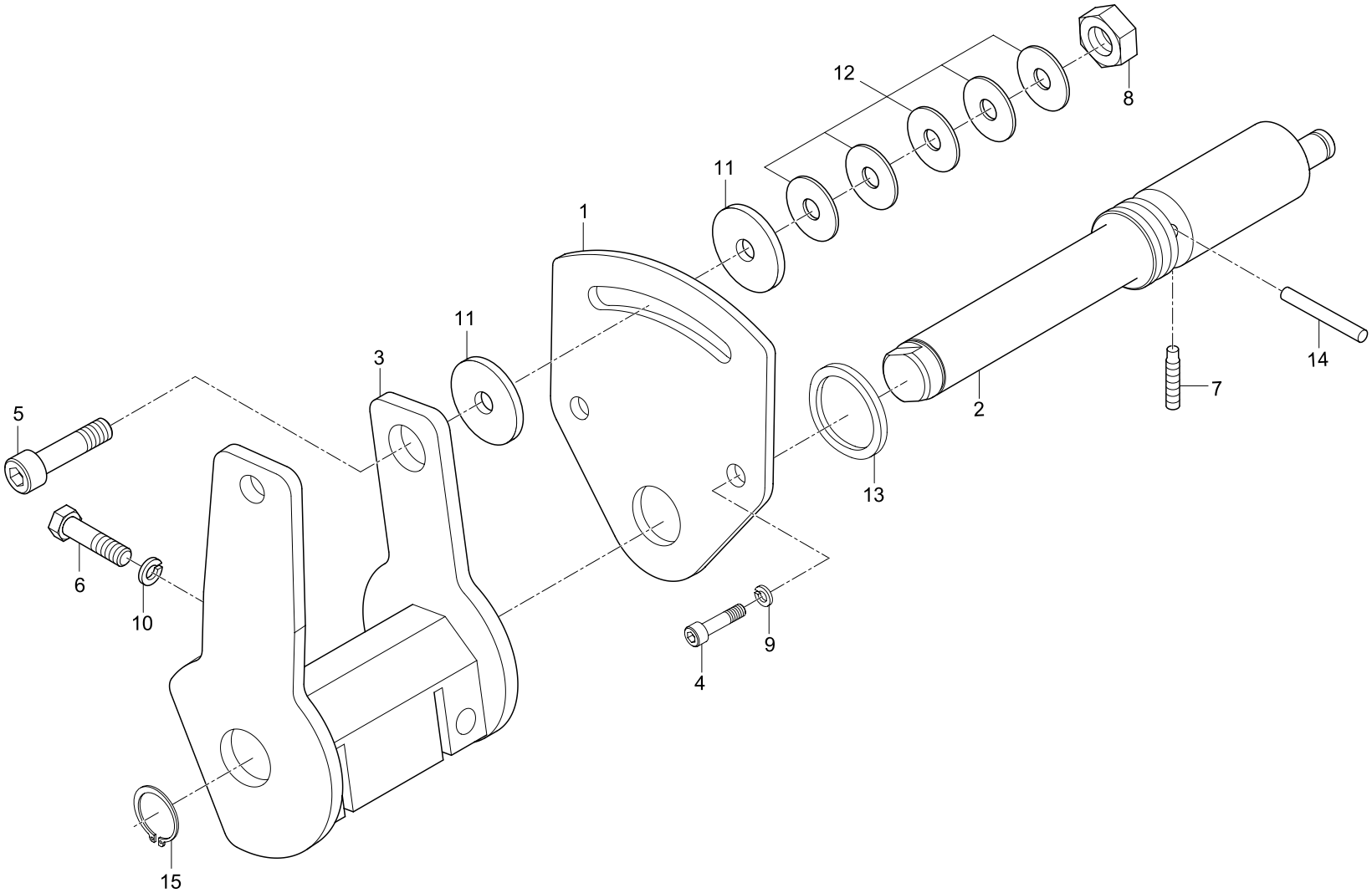

REF. NO	PART. NO	DESCRIPTION	Q'TY								I.C	REMARK
			CK20	CK20J	CK20H	CK20HJ	CK20-EU	CK20J-EU	CK20H-EU	CK20HJ-EU		
01	T2350-39281	FLANGE	1	1	1	1	1	1	1	1		
02	T2350-39271	SHAFT	1	1	1	1	1	1	1	1		
03	T2350-39261	LEVER, CONTROL	1	1	1	1	1	1	1	1		
04	T2350-39241	BOLT	2	2	2	2	2	2	2	2		
05	T2350-39251	BOLT	1	1	1	1	1	1	1	1		
06	T2610-39252	BOLT	2	2	2	2	2	2	2	2		
07	T2610-39571	SCREW, STOPPER	1	1	1	1	1	1	1	1		
08	T2670-50981	NUT, LOCK	1	1	1	1	1	1	1	1		
09	04512-50060	WASHER, SPRING	2	2	2	2	2	2	2	2		
10	04512-50080	WASHER, SPRING	2	2	2	2	2	2	2	2		
11	T2350-39371	WASHER, LOCK	2	2	2	2	2	2	2	2		
12	T2350-39201	SPRING, PLATE	5	5	5	5	5	5	5	5		
13	04810-00180	O-RING	1	1	1	1	1	1	1	1		
14	05411-00420	PIN, SPRING	1	1	1	1	1	1	1	1		

T610 MAIN DISTRIBUTOR VALVE GROUP

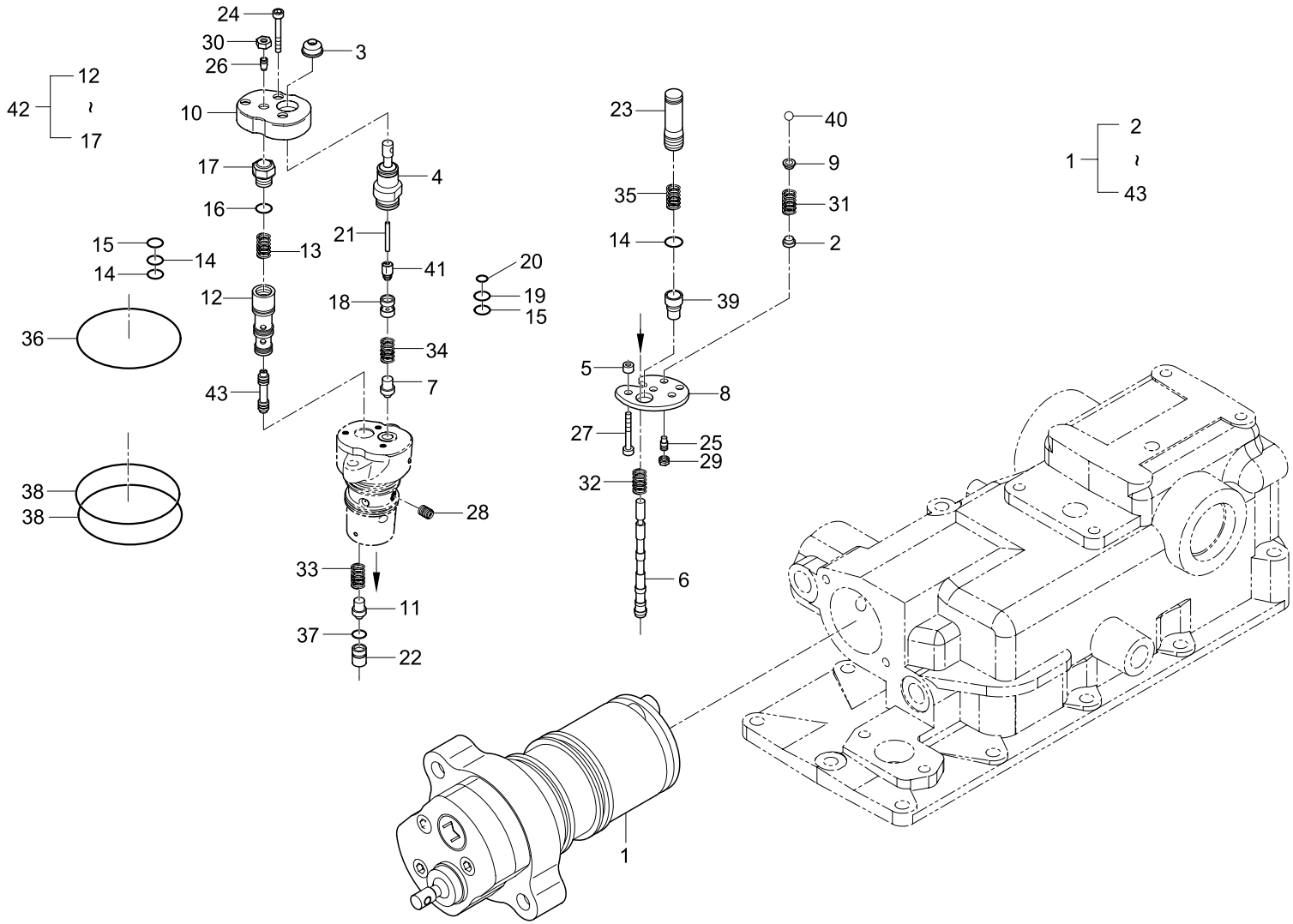

REF. NO	PART. NO	DESCRIPTION	Q'TY								I.C	REMARK
			CK20	CK20J	CK20H	CK20HJ	CK20-EU	CK20J-EU	CK20H-EU	CK20HJ-EU		
01	110047004	MLS VALVE ASS'Y	1	1	1	1	1	1	1	1		
02	110001080	SPACER	1	1	1	1	1	1	1	1		
03	110001110	RUBBER	1	1	1	1	1	1	1	1		
04	110009032	LEVER ASS'Y	1	1	1	1	1	1	1	1		
05	110001160	SPACER	3	3	3	3	3	3	3	3		
06		SPOOL	1	1	1	1	1	1	1	1		
07	110003040	VALVE	1	1	1	1	1	1	1	1		
08	110003150	PLATE	1	1	1	1	1	1	1	1		
09	110004080	SPACER	1	1	1	1	1	1	1	1		
10	110004090	COVER	1	1	1	1	1	1	1	1		
11	110005040	VALVE	1	1	1	1	1	1	1	1		
12	110006032	VALVE	1	1	1	1	1	1	1	1		
13	350044000	SPRING	1	1	1	1	1	1	1	1		
14	360011000	O-RING	3	3	3	3	3	3	3	3		
15	360054000	O-RING	2	2	2	2	2	2	2	2		
16	360076000	O-RING	1	1	1	1	1	1	1	1		
17	440144000	PLUG	1	1	1	1	1	1	1	1		
18	110011020	VALVE SEAT	1	1	1	1	1	1	1	1		
19	360009000	O-RING	1	1	1	1	1	1	1	1		
20	360010000	O-RING	1	1	1	1	1	1	1	1		
21	460002000	PIN	1	1	1	1	1	1	1	1		
22	110012020	VALVE SEAT	1	1	1	1	1	1	1	1		
23		VALVE	1	1	1	1	1	1	1	1		
24	300002000	SCREW	3	3	3	3	3	3	3	3		
25	300004000	SCREW	1	1	1	1	1	1	1	1		

REF. NO	PART. NO	DESCRIPTION	Q'TY								I.C	REMARK
			CK20	CK20J	CK20H	CK20HJ	CK20-EU	CK20J-EU	CK20H-EU	CK20HJ-EU		
26	300093000	SCREW	1	1	1	1	1	1	1	1		
27	300129000	SCREW	3	3	3	3	3	3	3	3		
28	300167000	SCREW	1	1	1	1	1	1	1	1		
29	310001000	NUT	1	1	1	1	1	1	1	1		
30	310003000	NUT	1	1	1	1	1	1	1	1		
31	350005000	SPRING	1	1	1	1	1	1	1	1		
32	350011000	SPRING	1	1	1	1	1	1	1	1		
33	350027000	SPRING	1	1	1	1	1	1	1	1		
34	350043000	SPRING	1	1	1	1	1	1	1	1		
35	350046000	SPRING	1	1	1	1	1	1	1	1		
36	360003000	O-RING	1	1	1	1	1	1	1	1		
37	360073000	O-RING	1	1	1	1	1	1	1	1		
38	360077000	O-RING	2	2	2	2	2	2	2	2		
39	440008000	PLUG	1	1	1	1	1	1	1	1		
40	450005000	BALL	1	1	1	1	1	1	1	1		
41	110004040	VALVE	1	1	1	1	1	1	1	1		
42	110007032	VALVE ASS'Y	1	1	1	1	1	1	1	1		
43	110002062	SPOOL, PILOT	1	1	1	1	1	1	1	1		

T620 HST CONTROL 2 GROUP

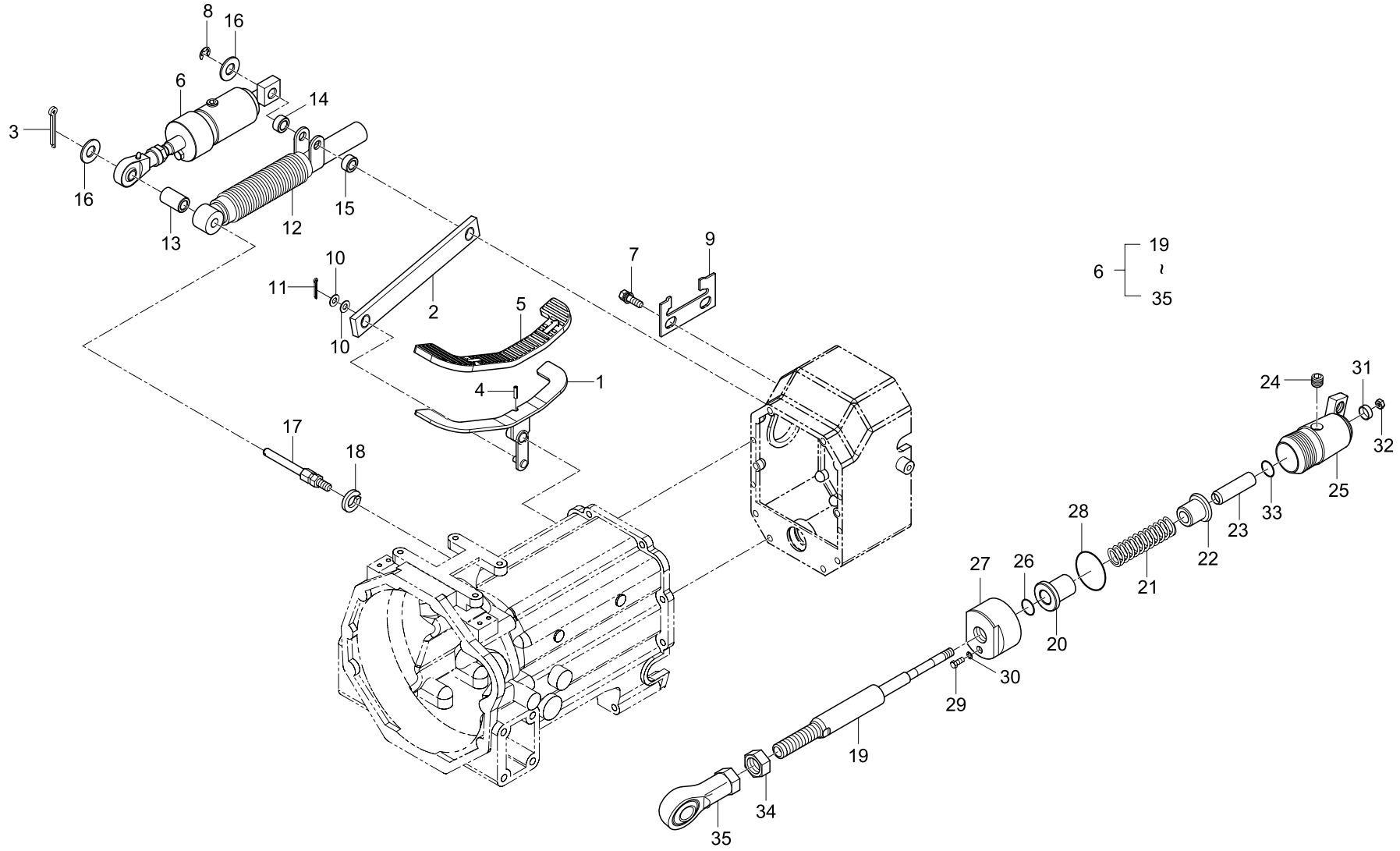

REF. NO	PART. NO	DESCRIPTION	Q'TY								I.C	REMARK
			CK20	CK20J	CK20H	CK20HJ	CK20-EU	CK20J-EU	CK20H-EU	CK20HJ-EU		
01	T2360-31113	PEDAL, HST			1	1			1	1		
02	T2360-32141	PLATE, CONNECTOR			1	1			1	1		
03	05511-50320	PIN, SPLIT			1	1			1	1		
04	05411-00628	PIN, SPRING			1	1			1	1		
05	T2360-31122	RUBBER, HST PEDAL			1	1			1	1		
06	T2360-32611	DAMPER CYLINDER ASS'Y			1	1			1	1		
07	01133-51020	BOLT			2	2			2	2		
08	04613-50060	RING, SNAP			1	1			1	1		
09	T2360-32131	PLATE, CONTROL			1	1			1	1		
10	04011-50100	WASHER, PLAIN			2	2			2	2		
11	05511-50215	PIN, SPLIT			1	1			1	1		
12	T2360-32511	DAMPER ASS'Y			1	1			1	1		
13	T2360-34141	SPACER			1	1			1	1		
14	T2360-34151	SPACER			1	1			1	1		
15	T2360-34161	SPACER			1	1			1	1		
16	04013-50080	WASHER, PLAIN			2	2			2	2		
17	T2360-32242	SHAFT			1	1			1	1		
18	04512-50080	WASHER, SPRING			1	1			1	1		
19	T2360-32631	SHAFT (A)			1	1			1	1		
20	T2360-32651	GUIDE (A)			1	1			1	1		
21	T2360-32681	SPRING			1	1			1	1		
22	T2360-32691	GUIDE (B)			1	1			1	1		
23	T2360-32701	SHAFT (B)			1	1			1	1		
24	15521-9602-2	PLUG			1	1			1	1		
25	T2360-32661	CAP (A)			1	1			1	1		

REF. NO	PART. NO	DESCRIPTION	Q'TY								I.C	REMARK
			CK20	CK20J	CK20H	CK20HJ	CK20-EU	CK20J-EU	CK20H-EU	CK20HJ-EU		
26	04811-00120	O-RING			2	2			2	2		
27	T2360-32641	CAP (B)			1	1			1	1		
28	04811-00120	O-RING			1	1			1	1		
29	T2360-32731	BOLT			1	1			1	1		
30	04717-00500	WASHER, SEAL			1	1			1	1		
31	T2360-32711	COLLAR			1	1			1	1		
32	T2670-50981	NUT			1	1			1	1		
33	04811-00120	O-RING			1	1			1	1		
34	02156-00080	NUT			1	1			1	1		
35	T2360-32621	JOINT, BALL			1	1			1	1		

T630 HST CONTROL 3 GROUP

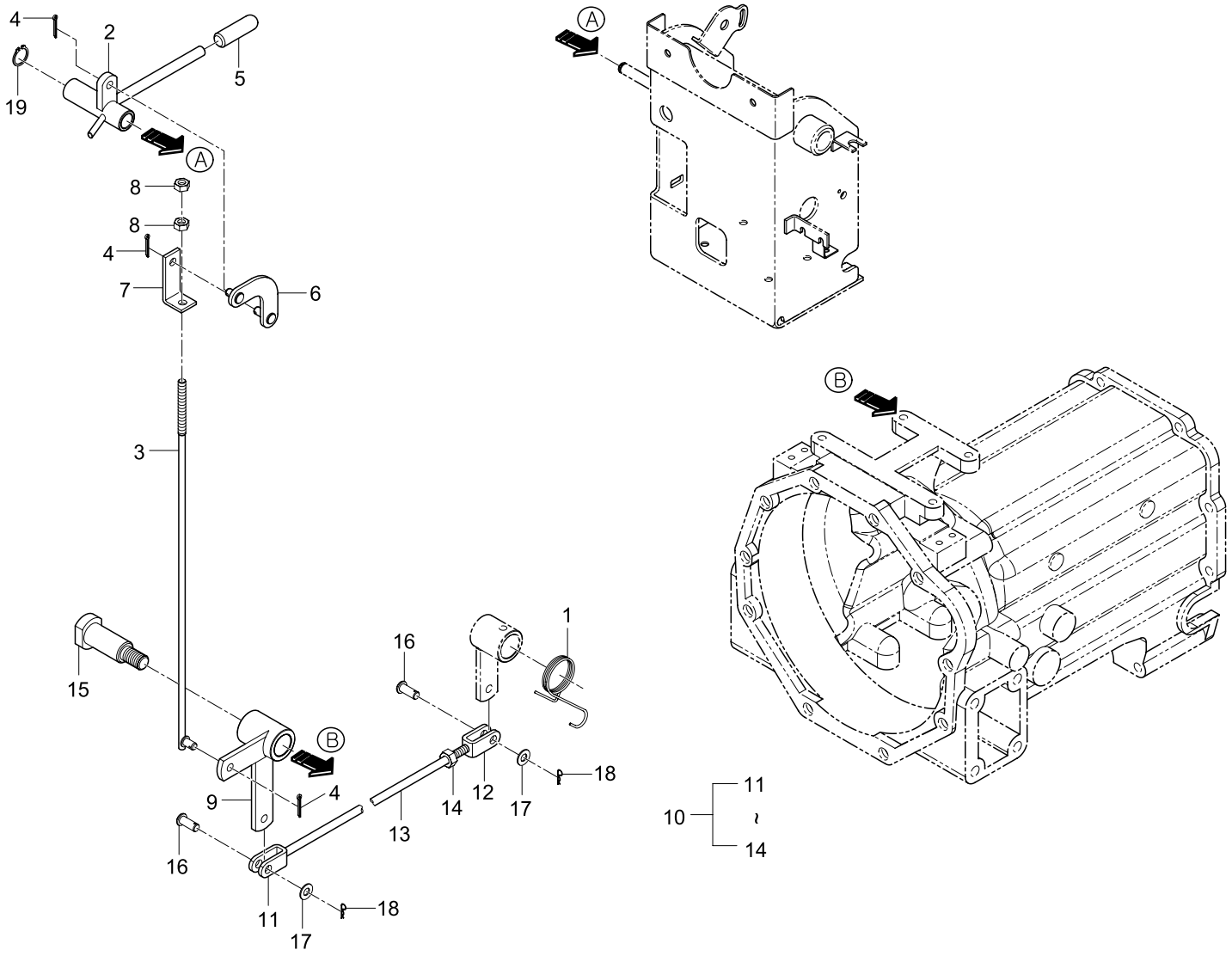

REF. NO	PART. NO	DESCRIPTION	Q'TY								I.C	REMARK
			CK20	CK20J	CK20H	CK20HJ	CK20-EU	CK20J-EU	CK20H-EU	CK20HJ-EU		
01	T2360-32352	SPRING 2			1	1						
					~3195-00020	~3196-00080						
01	T2360-32353	SPRING 2			1	1			1	1		
					3195-00021~	3196-00081~						
02	T2360-33111	LEVER, STOPPER			1	1			1	1		
02	T2360-33112	LEVER, STOPPER			1	1			1	1		
02	T2360-33113	LEVER, STOPPER			1	1			1	1		
03	T2360-33162	ROD 2			1	1			1	1		
03	T2360-33163	ROD 2			1	1			1	1		
04	05511-51615	PIN, SPLIT			3	3			3	3		
05	T2360-33192	GRIP (HST STOPPER)			1	1			1	1		
06	T2360-33121	LINK			1	1			1	1		
06	T2360-33122	LINK			1	1			1	1		
06	T2360-33123	LINK			1	1			1	1		
07	T2360-33131	PLATE			1	1			1	1		
08	02056-50060	NUT			2	2			2	2		
09	T2360-33142	ARM			1	1			1	1		
09	T2360-33143	ARM			1	1			1	1		
10	T2360-33201	ROD, CONNECTOR			1	1			1	1		
11	T2350-25891001	ROD 1			1	1			1	1		
12	T2350-25891002	ROD 2			1	1			1	1		
13	T2360-33201003	BAR			1	1			1	1		
14	02114-50080	NUT			1	1			1	1		
15	T2360-33171	BOLT, STOPPER (HST PEDAL)			1	1			1	1		
16	05122-50825	PIN, JOINT			2	2			2	2		
17	04012-50080	WASHER, PLAIN			2	2			2	2		
18	05515-50800	PIN, SNAP			2	2			2	2		

REF. NO	PART. NO	DESCRIPTION	Q'TY								I.C	REMARK
			CK20	CK20J	CK20H	CK20HJ	CK20-EU	CK20J-EU	CK20H-EU	CK20HJ-EU		
19	04612-50120	RING, SNAP			1	1			1	1		

T640 GEAR PUMP GROUP

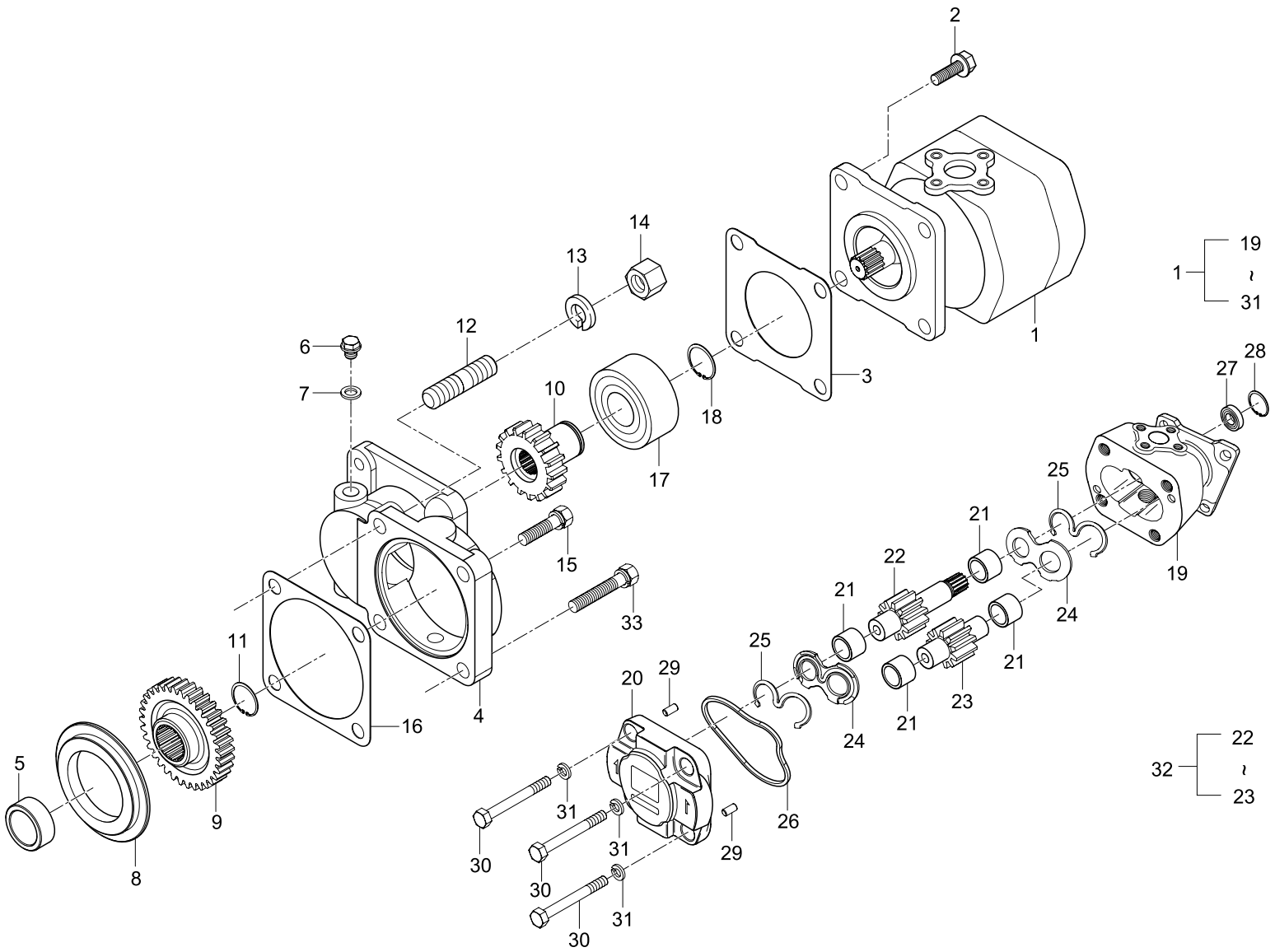

REF. NO	PART. NO	DESCRIPTION	Q'TY								I.C	REMARK
			CK20	CK20J	CK20H	CK20HJ	CK20-EU	CK20J-EU	CK20H-EU	CK20HJ-EU		
01	T2350-76101	GEAR PUMP ASS'Y	1	1	1	1	1	1	1	1		
01	T2350-76102	GEAR PUMP ASS'Y	1	1	1	1	1	1	1	1		
02	01123-50822	BOLT	4	4	4	4	4	4	4	4		
03	E5205-87132	GASKET	1	1	1	1	1	1	1	1		
04	T2350-76001	HOLDER, GEAR PUMP	1	1	1	1	1	1	1	1		
04	T2350-76002	HOLDER, GEAR PUMP	1	1	1	1	1	1	1	1		
04	T2350-76003	HOLDER, GEAR PUMP	1	1	1	1	1	1	1	1		
04	T2350-76004	HOLDER, GEAR PUMP	1	1	1	1	1	1	1	1		
05	T2350-76041	SPACER	1	1	1	1	1	1	1	1		
06	06331-35010	PLUG	2	2	2	2	2	2	2	2		
07	04714-00100	WASHER, SEAL	2	2	2	2	2	2	2	2		
08	E5205-36481	BUSHING	1	1	1	1	1	1	1	1		
09	T2350-76021	GEAR, 29	1	1	1	1	1	1	1	1		
10	T2350-76031	GEAR, 18	1	1	1	1	1	1	1	1		
11	04612-00190	RING, SNAP	1	1	1	1	1	1	1	1		
12	01513-50822	STUD	1	1	1	1	1	1	1	1		
13	04512-50080	WASHER, SPRING	1	1	1	1	1	1	1	1		
14	02156-50080	NUT	1	1	1	1	1	1	1	1		
15	01123-50822	BOLT	3	3	3	3	3	3	3	3		
15	01123-50822	BOLT	1	1	1	1	1	1	1	1		
16	T2320-36331	PACKING	1	1	1	1	1	1	1	1		
17	08241-05204	BEARING, BALL	1	1	1	1	1	1	1	1		
18	04612-00200	RING, SNAP	1	1	1	1	1	1	1	1		
19		CASE	1	1	1	1	1	1	1	1		
20		COVER	1	1	1	1	1	1	1	1		

REF. NO	PART. NO	DESCRIPTION	Q'TY								I.C	REMARK
			CK20	CK20J	CK20H	CK20HJ	CK20-EU	CK20J-EU	CK20H-EU	CK20HJ-EU		
21	7217-00360	BUSHING	4	4	4	4	4	4	4	4		
22		GEAR, SHAFT	1	1	1	1	1	1	1	1		
23		GEAR, DRIVING	1	1	1	1	1	1	1	1		
24	7217-00312	PLATE, THRUST	2	2	2	2	2	2	2	2		
25	7217-00322	SEAL, CHANNEL	2	2	2	2	2	2	2	2		
26	7217-00430	SEAL, SQUARE	1	1	1	1	1	1	1	1		
27	7217-00340	SEAL-LIP	1	1	1	1	1	1	1	1		
28	9541-02035	RING, RETAINING	1	1	1	1	1	1	1	1		
29	7218-00650	PIN-DOWEL	2	2	2	2	2	2	2	2		
30	9016-21007	BOLT	4	4	4	4	4	4	4	4		
31	9213-10000	WASHER, SPRING	4	4	4	4	4	4	4	4		
32	7213-00500S	GEAR SHAFT KIT	1	1	1	1	1	1	1	1		
33	01123-50835	BOLT	2	2	2	2	2	2	2	2		

T650 SUCTION PIPE GROUP

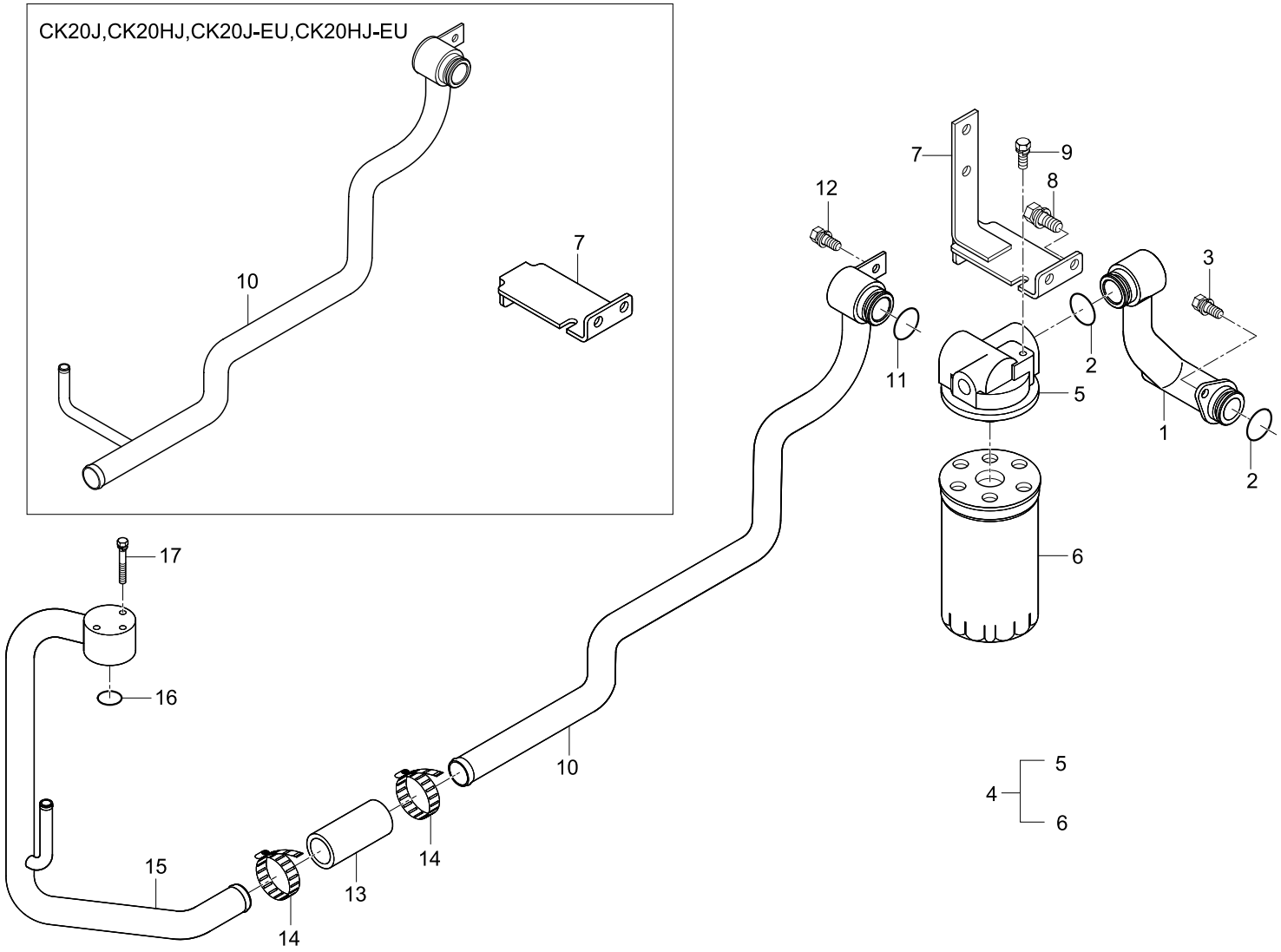

REF. NO	PART. NO	DESCRIPTION	Q'TY								I.C	REMARK
			CK20	CK20J	CK20H	CK20HJ	CK20-EU	CK20J-EU	CK20H-EU	CK20HJ-EU		
01	T2350-38001	TUBE 1, SUCTION	1	1	1	1	1	1	1	1		
01	T2350-38002	TUBE 1, SUCTION	1	1	1	1	1	1	1	1		
02	04811-00290	O-RING	2	2	2	2	2	2	2	2		
03	01123-50820	BOLT	2	2	2	2	2	2	2	2		
04	T2350-38121	HYDRAULIC FILTER ASS'Y	1	1			1	1				
04	T2350-38122	HYDRAULIC FILTER ASS'Y	1	1			1	1				
04	T2360-38111	HYDRAULIC FILTER ASS'Y			1	1			1	1		
04	T2360-38112	HYDRAULIC FILTER ASS'Y			1	1			1	1		
05	T2350-38041	BRACKET, FILTER	1	1			1	1				
05	T2350-38042	BRACKET, FILTER	1	1			1	1				
05	T2360-38041	BRACKET, FILTER			1	1			1	1		
05	T2360-38042	BRACKET, FILTER			1	1			1	1		
06	T4260-38125	FILTER, HYDRAULIC	1	1	1	1	1	1	1	1		
07	T2350-38061	SUPPORT, FILTER	1	1			1	1				
07	T2360-38061	SUPPORT, FILTER			1	1			1	1		
08	01133-51020	BOLT	2	2	2	2	2	2	2	2		
09	01125-50820	BOLT	1	1	1	1	1	1	1	1		
10	T2350-38012	TUBE 2, SUCTION	1		1		1		1			
10	T2350-38013	TUBE 2, SUCTION	1		1		1		1			
10	T2350-38112	TUBE 4, SUCTION		1		1		1		1		
10	T2350-38113	TUBE 4, SUCTION		1		1		1		1		
11	04811-00290	O-RING	1	1	1	1	1	1	1	1		
12	01123-50820	BOLT	1	1	1	1	1	1	1	1		
13	84612-3777-0	TUBE, RUBBER	1	1	1	1	1	1	1	1		
14	31355-3819-1	BAND, HOSE	2	2	2	2	2	2	2	2		

REF. NO	PART. NO	DESCRIPTION	Q'TY								I.C	REMARK
			CK20	CK20J	CK20H	CK20HJ	CK20-EU	CK20J-EU	CK20H-EU	CK20HJ-EU		
15	T2350-38021	TUBE 3, SUCTION	1	1	1	1	1	1	1	1		
15	T2350-38022	TUBE 3, SUCTION	1	1	1	1	1	1	1	1		
16	04810-00200	O-RING	1	1	1	1	1	1	1	1		
17	01023-50645	BOLT	3	3	3	3	3	3	3	3		

T660 OIL FILLER PIPE GROUP

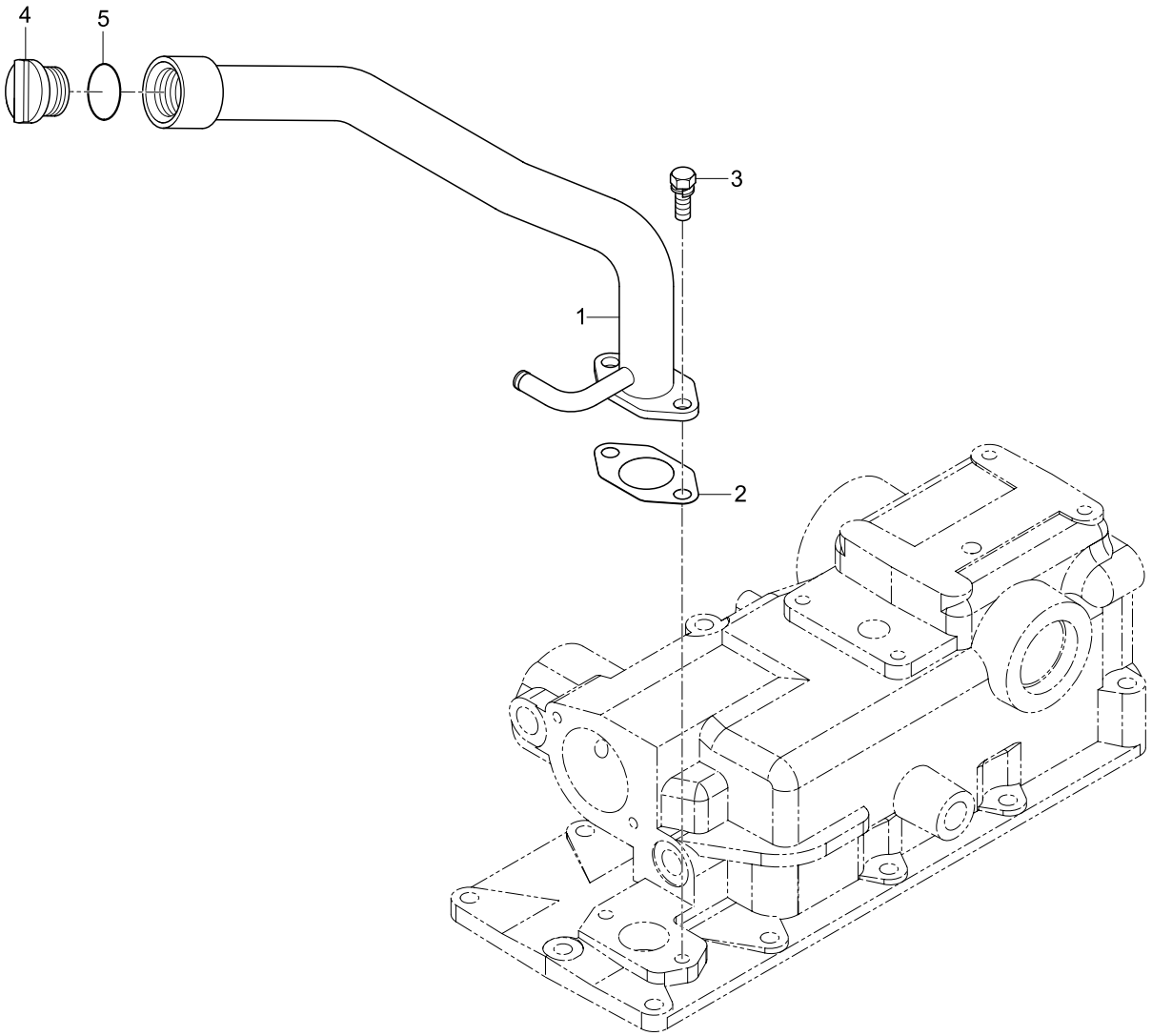

REF. NO	PART. NO	DESCRIPTION	Q'TY								I.C	REMARK
			CK20	CK20J	CK20H	CK20HJ	CK20-EU	CK20J-EU	CK20H-EU	CK20HJ-EU		
01	T2350-35003	TUBE, OIL FILLER	1	1	1	1	1	1	1	1		
01	T2350-35004	TUBE, OIL FILLER	1	1	1	1	1	1	1	1		
02	T4620-35012	PACKING	1	1	1	1	1	1	1	1		
03	01133-51018	BOLT	2	2	2	2	2	2	2	2		
04	38240-2141-2	PLUG, OIL FILLER	1	1	1	1	1	1	1	1		
05	04811-50300	O-RING	1	1	1	1	1	1	1	1		

T670 FLOW CONTROL VALVE GROUP

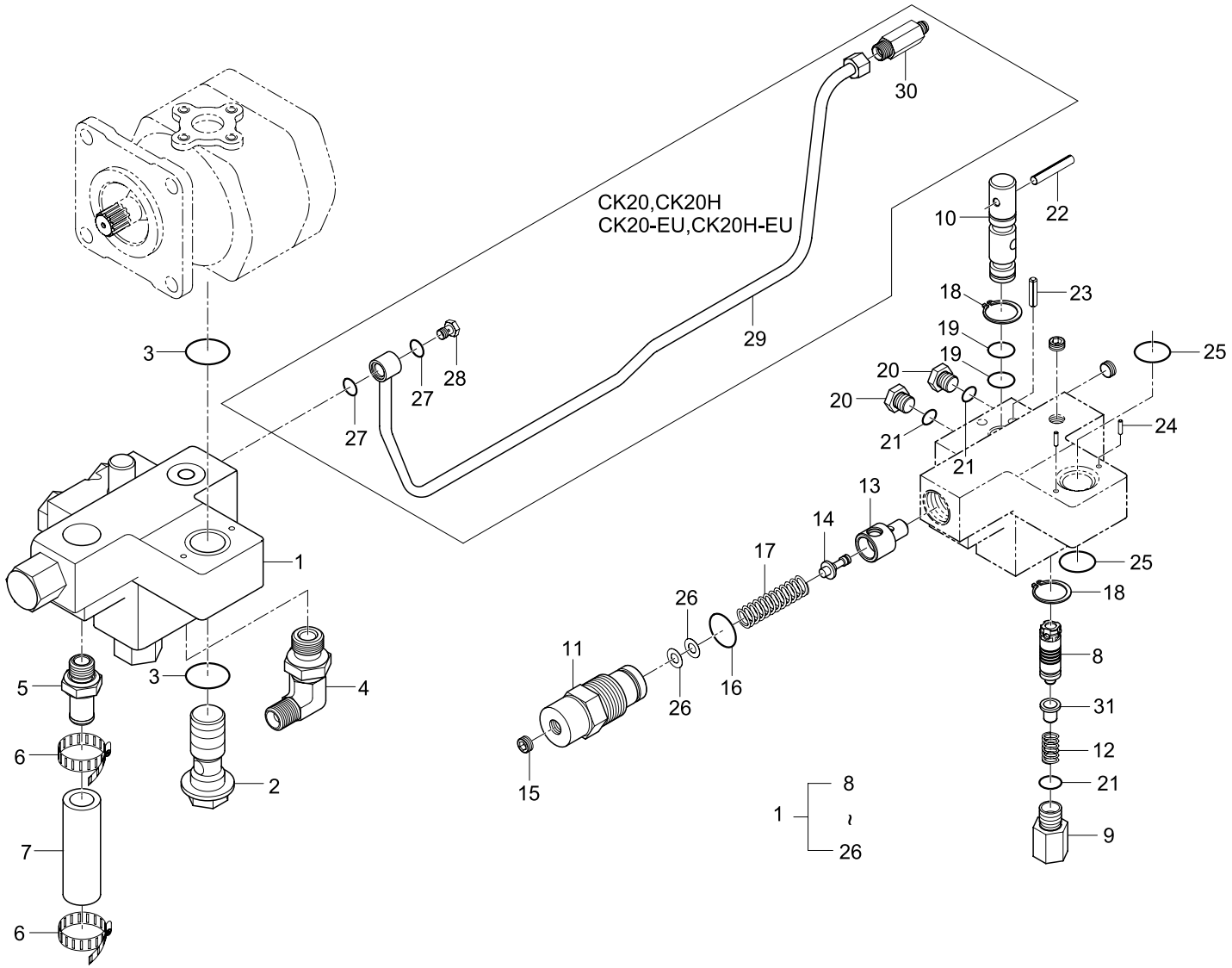

REF. NO	PART. NO	DESCRIPTION	Q'TY								I.C	REMARK
			CK20	CK20J	CK20H	CK20HJ	CK20-EU	CK20J-EU	CK20H-EU	CK20HJ-EU		
01	T2350-38301	FLOW CONTROL VALVE ASS'Y	1	1	1	1	1	1	1	1		
01	T2350-38302	FLOW CONTROL VALVE ASS'Y	1	1	1	1	1	1	1	1		
02	T2350-76121	BOLT, JOINT	1	1	1	1	1	1	1	1		
03	04810-00200	O-RING	2	2	2	2	2	2	2	2		
04	T2350-66161	ELBOW	1	1	1	1	1	1	1	1		
05	T2350-66181	CONNECTOR	1	1	1	1	1	1	1	1		
06	52200-2523-1	BAND, HOSE	2	2	2	2	2	2	2	2		
07	T2350-38401	HOSE, RETURN	1	1	1	1	1	1	1	1		
07	T2350-38402	HOSE, RETURN	1	1	1	1	1	1	1	1		
08		SPOOL, FLOW CONTROL	1	1	1	1	1	1	1	1		
09		PLUG, FLOW CONTROL	1	1	1	1	1	1	1	1		
10		SPOOL	1	1	1	1	1	1	1	1		
11		PLUG, R/V	1	1	1	1	1	1	1	1		
12		SPRING	1	1	1	1	1	1	1	1		
13		SEAT, R/V	1	1	1	1	1	1	1	1		
14		POPPET, R/V	1	1	1	1	1	1	1	1		
15	PLS02TL	PLUG, PT	5	5	5	5	5	5	5	5		
16	OJIS16	O-RING	1	1	1	1	1	1	1	1		
17		SPRING, R/V	1	1	1	1	1	1	1	1		
18	SRS14	RING, SNAP	2	2	2	2	2	2	2	2		
19	OPABP10A	O-RING	2	2	2	2	2	2	2	2		
20	PLSO6F9	PLUG, STEEL	2	2	2	2	2	2	2	2		
21	OPABP14	O-RING	3	3	3	3	3	3	3	3		
22	PSW05030	PIN, SPRING	1	1	1	1	1	1	1	1		
23	PSW05025	PIN, SPRING	2	2	2	2	2	2	2	2		

REF. NO	PART. NO	DESCRIPTION	Q'TY								I.C	REMARK
			CK20	CK20J	CK20H	CK20HJ	CK20-EU	CK20J-EU	CK20H-EU	CK20HJ-EU		
24	MS05010	PIN, DOWELL	2	2	2	2	2	2	2	2		
25	OPABP20	O-RING	2	2	2	2	2	2	2	2		
26		SHIM, R/V	2	2	2	2	2	2	2	2		
27	04810-00200	O-RING	2		2		2		2			
28	T4620-37092	BOLT, JOINT	1		1		1		1			
29	T2350-37052	TUBE(P), HYDRAULIC	1		1		1		1			
30	T2350-37071	CONNECTOR, FILTER	1		1		1		1			
31	21001-07	GUIDE, SPRING	1	1	1	1	1	1	1	1		

T680 HST EXTERNAL HYDRAULIC LINE GROUP

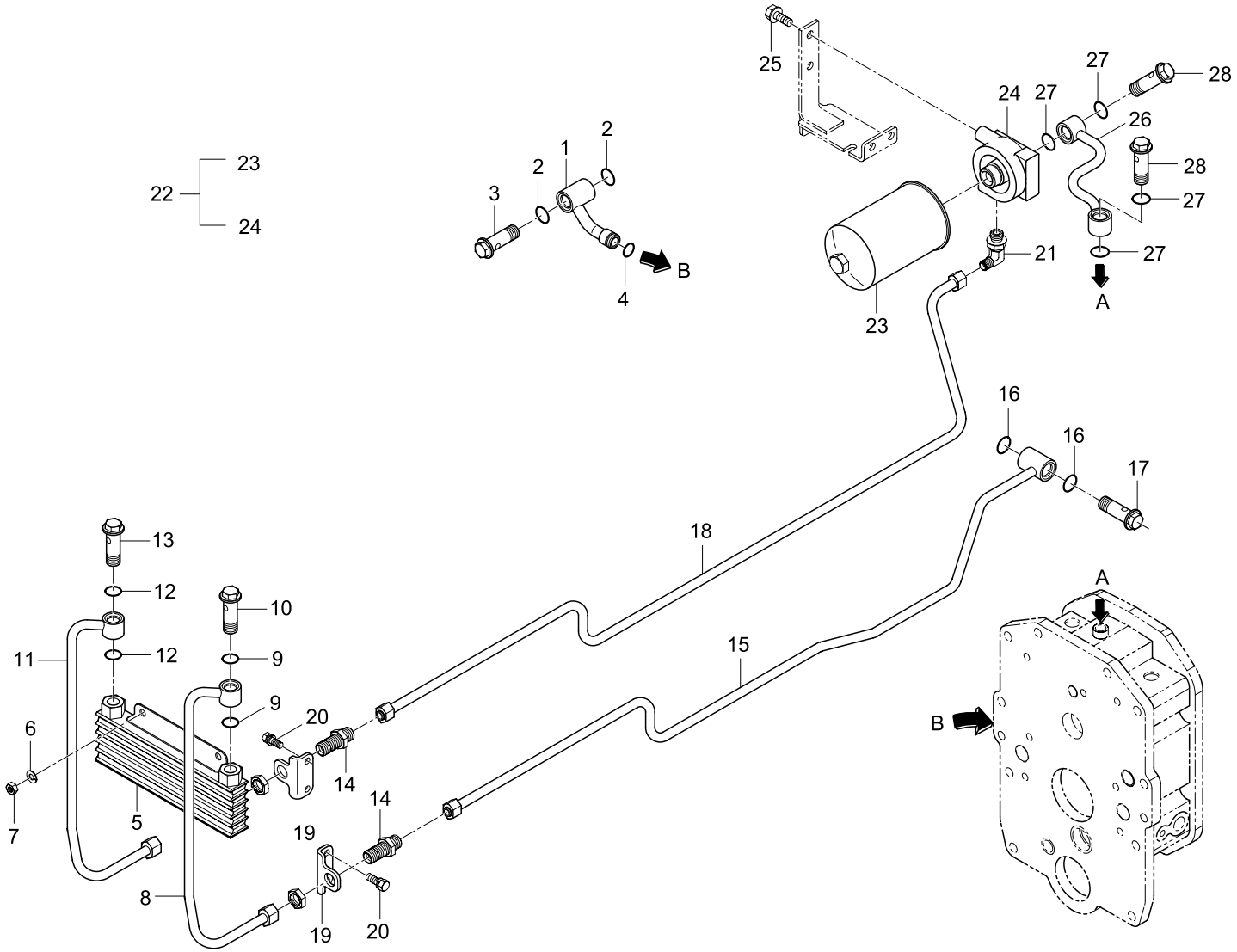

REF. NO	PART. NO	DESCRIPTION	Q'TY								I.C	REMARK
			CK20	CK20J	CK20H	CK20HJ	CK20-EU	CK20J-EU	CK20H-EU	CK20HJ-EU		
01	T2360-37042	TUBE, HST CHARGE SUCTION			1	1			1	1		
01	T2360-37043	TUBE, HST CHARGE SUCTION			1	1			1	1		
01	T2360-37044	TUBE, HST CHARGE SUCTION			1	1			1	1		
02	04810-00200	O-RING			2	2			2	2		
03	T2360-37081	BOLT, JOINT			1	1			1	1		
04	04810-00160	O-RING			1	1			1	1		
05	T2360-37011	OIL COOLER ASS'Y			1	1			1	1		
06	04512-50080	WASHER, SPRING			2	2			2	2		
07	02156-50080	NUT			2	2			2	2		
08	T2360-37112	TUBE 1, COOLING			1	1			1	1		
09	04810-00180	O-RING			2	2			2	2		
10	T2360-37151	BOLT, JOINT (OIL COOLER)			1	1			1	1		
11	T2360-37122	TUBE 2, COOLING			1	1			1	1		
12	04810-00180	O-RING			2	2			2	2		
13	T2360-37151	BOLT, JOINT			1	1			1	1		
14	T4810-47052	CONNECTOR			2	2			2	2		
15	T2360-37132	TUBE 3, COOLING			1	1			1	1		
15	T2360-37133	TUBE 3, COOLING			1	1			1	1		
15	T2360-37134	TUBE 3, COOLING			1	1			1	1		
16	04810-00200	O-RING			2	2			2	2		
17	T2360-37081	BOLT, JOINT			1	1			1	1		
18	T2360-37142	TUBE 4, COOLING			1	1			1	1		
18	T2360-37143	TUBE 4, COOLING			1	1			1	1		
18	T2360-37144	TUBE 4, COOLING			1	1			1	1		
19	T2360-37211	BRACKET 1, TUBE			2	2			2	2		

REF. NO	PART. NO	DESCRIPTION	Q'TY								I.C	REMARK
			CK20	CK20J	CK20H	CK20HJ	CK20-EU	CK20J-EU	CK20H-EU	CK20HJ-EU		
20	01123-50814	BOLT			4	4			4	4		
21	T2360-38081	ELBOW			1	1			1	1		
22	T2360-38121	HST HYDRAULIC FILTER ASS'Y			1	1			1	1		
23	T2360-38031	FILTER, HST HYDRAULIC			1	1			1	1		
24	T2360-38051	BRACKET 2, FILTER (HST)			1	1			1	1		
25	01133-51020	BOLT			2	2			2	2		
26	T2360-37031	TUBE, HST INPUT			1	1			1	1		
26	T2360-37032	TUBE, HST INPUT			1	1			1	1		
27	04810-00200	O-RING			4	4			4	4		
28	T4520-90042	BOLT, JOINT			2	2			2	2		

T690 JOYSTICK GROUP

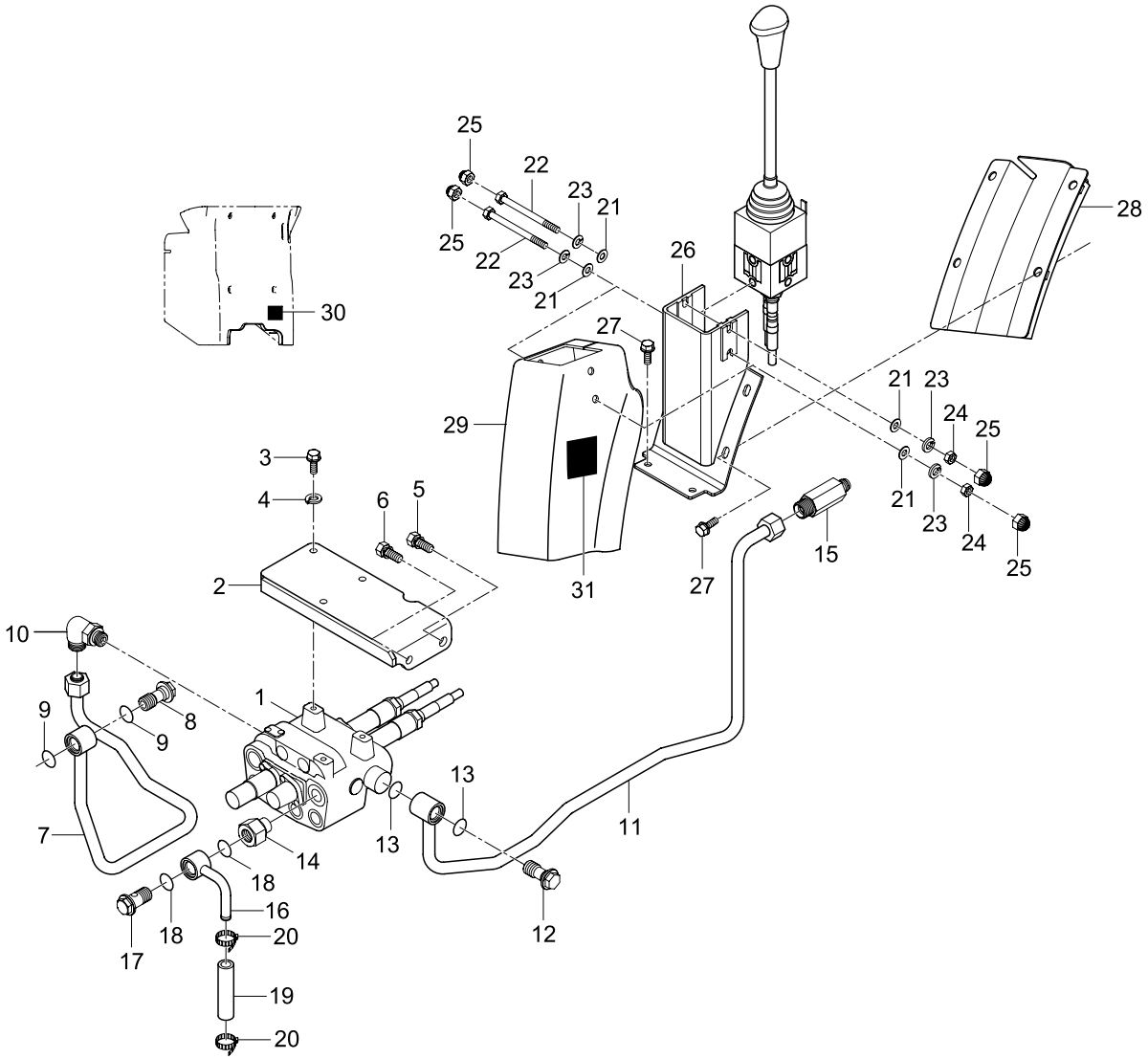

REF. NO	PART. NO	DESCRIPTION	Q'TY								I.C	REMARK
			CK20	CK20J	CK20H	CK20HJ	CK20-EU	CK20J-EU	CK20H-EU	CK20HJ-EU		
01	T2350-90111	JOYSTICK VALVE ASS'Y		1		1		1		1		
02	T2350-90212	SUPPORT, VALVE		1		1		1		1		
03	T2350-90311	BOLT, VALVE STOPPER		3		3		3		3		
04	04512-50080	WASHER, SPRING		3		3		3		3		
05	01133-51225	BOLT		1		1		1		1		
06	01133-51025	BOLT		1		1		1		1		
07	T2350-37082	TUBE, HYDRAULIC (P1)		1		1						
07	T2355-37081	TUBE, HYDRAULIC (P1)		1		1						
07	T2350-37082	TUBE, HYDRAULIC (P1)						1		1		
08	T4620-37092	BOLT, JOINT		1		1		1		1		
09	04810-00200	O-RING		2		2		2		2		
10	T4682-37221	ELBOW		1		1		1		1		
11	T2350-37091	TUBE, HYDRAULIC (P2)		1		1		1		1		
12	T2350-38501	BOLT, JOINT		1		1		1		1		
13	04810-00200	O-RING		2		2		2		2		
14	T2350-90171	CONNECTOR		1		1		1		1		
15	T2350-37071	CONNECTOR		1		1		1		1		
16	T2350-90221	TUBE, RETURN		1		1		1		1		
17	T4520-90042	BOLT, JOINT		1		1		1		1		
18	04810-00200	O-RING		2		2		2		2		
19	T2350-38401	HOSE, RETURN		1		1		1		1		
19	T2350-38402	HOSE, RETURN		1		1		1		1		
20	52200-2523-1	BAND, HOSE		2		2		2		2		
21	04015-50080	WASHER, PLAIN		4		4		4		4		
22	01153-50803	BOLT		2		2		2		2		

REF. NO	PART. NO	DESCRIPTION	Q'TY								I.C	REMARK
			CK20	CK20J	CK20H	CK20HJ	CK20-EU	CK20J-EU	CK20H-EU	CK20HJ-EU		
23	04512-50080	WASHER, SPRING		4		4		4		4		
24	02176-50080	NUT		2		2		2		2		
25	T4815-93211	NUT, CAP		4		4		4		4		
26	T2350-78312	FRAME, JOYSTICK		1		1		1		1		
27	01125-50820	BOLT		6		6		6		6		
28	T2350-95071	COVER, HOSE		1		1		1		1		
29	T2350-90324	COVER, JOYSTICK		1		1		1		1		
30	T2350-54131	LABEL, JOYSTICK		1		1		1		1		
31	T2350-54141	LABEL, JOYSTICK CAUTION		1		1		1		1		

T691 JOYSTICK (1)

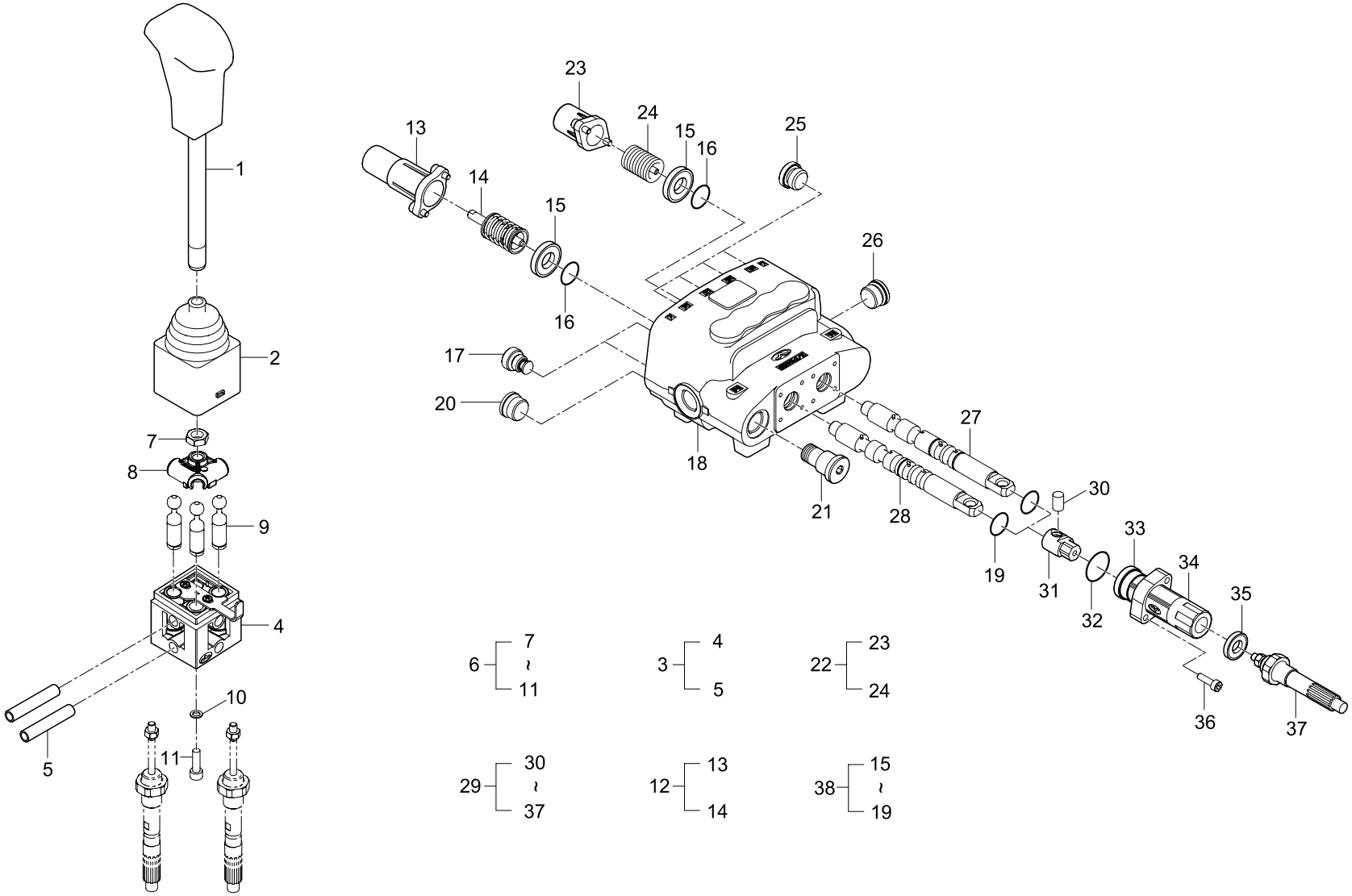

REF. NO	PART. NO	DESCRIPTION	Q'TY								I.C	REMARK
			CK20	CK20J	CK20H	CK20HJ	CK20-EU	CK20J-EU	CK20H-EU	CK20HJ-EU		
01	XAST281431	GRIP		1		1		1		1		
02	3SOF204100	RUBBER		1		1		1		1		
03	5COR211661	SCF KIT BODY		1		1		1		1		
04	XCOR211661	BODY KIT		1		1		1		1		
05	3ANE112151	RING		2		2		2		2		
06	5CIN305	SELECTOR KIT		1		1		1		1		
07	4DAD314150	NUT		1		1		1		1		
08	3FUL845130	SELECTOR		1		1		1		1		
09	3PER314610	PIN		3		3		3		3		
10	4ROS606407	WASHER		1		1		1		1		
11	4VIT606020	SCREW		1		1		1		1		
12	5V13306020	SPOOL KIT		1		1		1		1		
13	XCAP210725	CAP		1		1		1		1		
14	XPER11660R	SPOOL CONTROL KIT		1		1		1		1		
15		RING		2		2		2		2		
16		O-RING		4		4		4		4		
17		VR/S080-SDM102 KIT		2		2		2		2		
18		SDM102/2-P/SAE-PKAE BODY		1		1		1		1		
19		O-RING		4		4		4		4		
20	3XTAP822150	PLUG		2		2		2		2		
21	XTAP524340	PLUG		1		1		1		1		
22	5V08205000	SPOOL CONTROL KIT		1		1		1		1		
23	XCAP280370	CAP		1		1		1		1		
24	XV08105200	SPOOL CONTROL KIT		1		1		1		1		
25	3XTAP817130	PLUG		4		4		4		4		

REF. NO	PART. NO	DESCRIPTION	Q'TY								I.C	REMARK
			CK20	CK20J	CK20H	CK20HJ	CK20-EU	CK20J-EU	CK20H-EU	CK20HJ-EU		
26	3XTAP822150	PLUG		2		2		2		2		
27	3CU5210100	SPOOL		1		1		1		1		
28	3CU5242100	SPOOL		1		1		1		1		
29	5TEL107110	TP 50 KIT		1		1		1		1		
30	3SP1109181	PIN ROD		2		2		2		2		
31	3GIU417290	JOINT		2		2		2		2		
32	4GUA122018	O-RING		2		2		2		2		
33	3CAP430890	CAP		2		2		2		2		
34	3FLA135101	FLANGE		2		2		2		2		
35	4RON413525	WASHER		2		2		2		2		
36	4VIT605018	SCREW		4		4		4		4		
37	4CAV600500	CABLE		2		2		2		2		
38	5KC1858002	KIT BODY		1		1		1		1		

T700 EXTERNAL HYDRAULIC VALVE GROUP (Option)

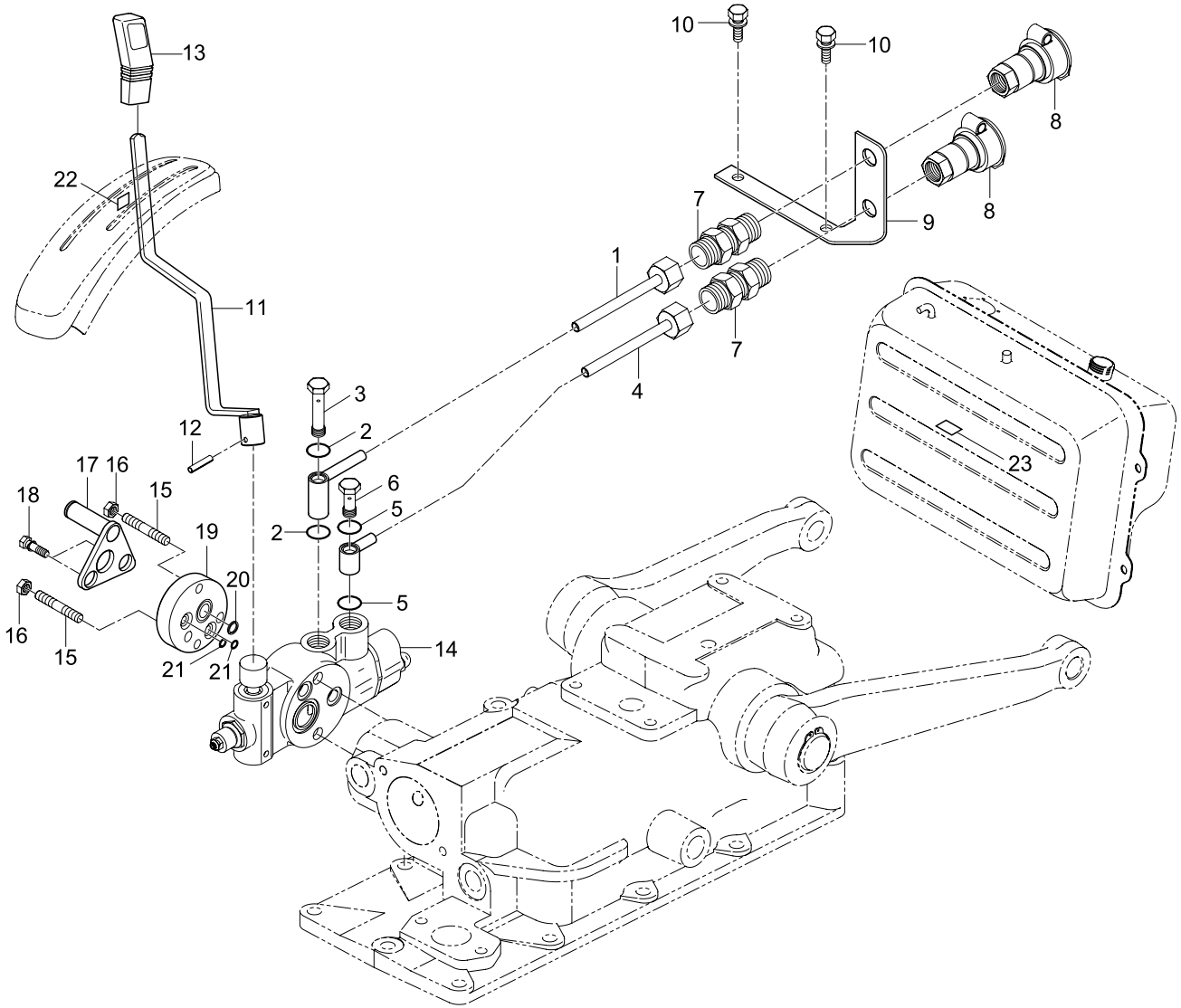

REF. NO	PART. NO	DESCRIPTION	Q'TY								I.C	REMARK
			CK20	CK20J	CK20H	CK20HJ	CK20-EU	CK20J-EU	CK20H-EU	CK20HJ-EU		
01	T2350-90012	TUBE A, HYDRAULIC	1	1	1	1	1	1	1	1		
02	04810-00200	O-RING	2	2	2	2	2	2	2	2		
03	T4520-37372	BOLT 2, JOINT	1	1	1	1	1	1	1	1		
04	T2350-90022	TUBE B, HYDRAULIC	1	1	1	1	1	1	1	1		
05	04810-00200	O-RING	2	2	2	2	2	2	2	2		
06	T4520-90042	BOLT, JOINT	1	1	1	1	1	1	1	1		
07	T4682-37581	CONNECTOR, FILTER	2	2	2	2	2	2	2	2		
08	T4520-90093	COUPLER SOCKET ASS'Y	2	2	2	2	2	2	2	2		
09	T2350-90072	SUPPORT, SOCKET	1	1	1	1	1	1	1	1		
10	01133-51025	BOLT	2	2	2	2	2	2	2	2		
11	T2350-65252	LEVER, DOUBLE ACTING VALVE	1	1	1	1	1	1	1	1		
11	T2350-65253	LEVER, DOUBLE ACTING VALVE	1	1	1	1	1	1	1	1		
12	05411-00628	PIN, SPRING	1	1	1	1	1	1	1	1		
13	T2350-65261	GRIP (DOUBLE ACTING VALVE LEVER)	1	1	1	1	1	1	1	1		
13	T2350-65262	GRIP (DOUBLE ACTING VALVE LEVER)	1	1	1	1	1	1	1	1		
14	008264	DOUBLE ACTING VALVE ASS'Y	1	1	1	1	1	1	1	1		
15	T2610-37871	STUD	2	2	2	2	2	2	2	2		
16	41182-5151-1	NUT	2	2	2	2	2	2	2	2		
17	T2350-65461	HOLDER(A), LEVER	1	1	1	1	1	1	1	1		
18	01123-50820	BOLT	2	2	2	2	2	2	2	2		
19	T2350-37471	FLANGE	1	1	1	1	1	1	1	1		
20	04811-06250	O-RING	1	1	1	1	1	1	1	1		
21	04810-00120	O-RING	2	2	2	2	2	2	2	2		
22	T2350-53171	LABEL, DOUBLE ACTING VALVE	1	1	1	1	1	1	1	1		
23	T2350-54122	LABEL, COUPLER SOCKET	1	1	1	1	1	1	1	1		

T701 DOUBLE ACTING VALVE GROUP (Option)

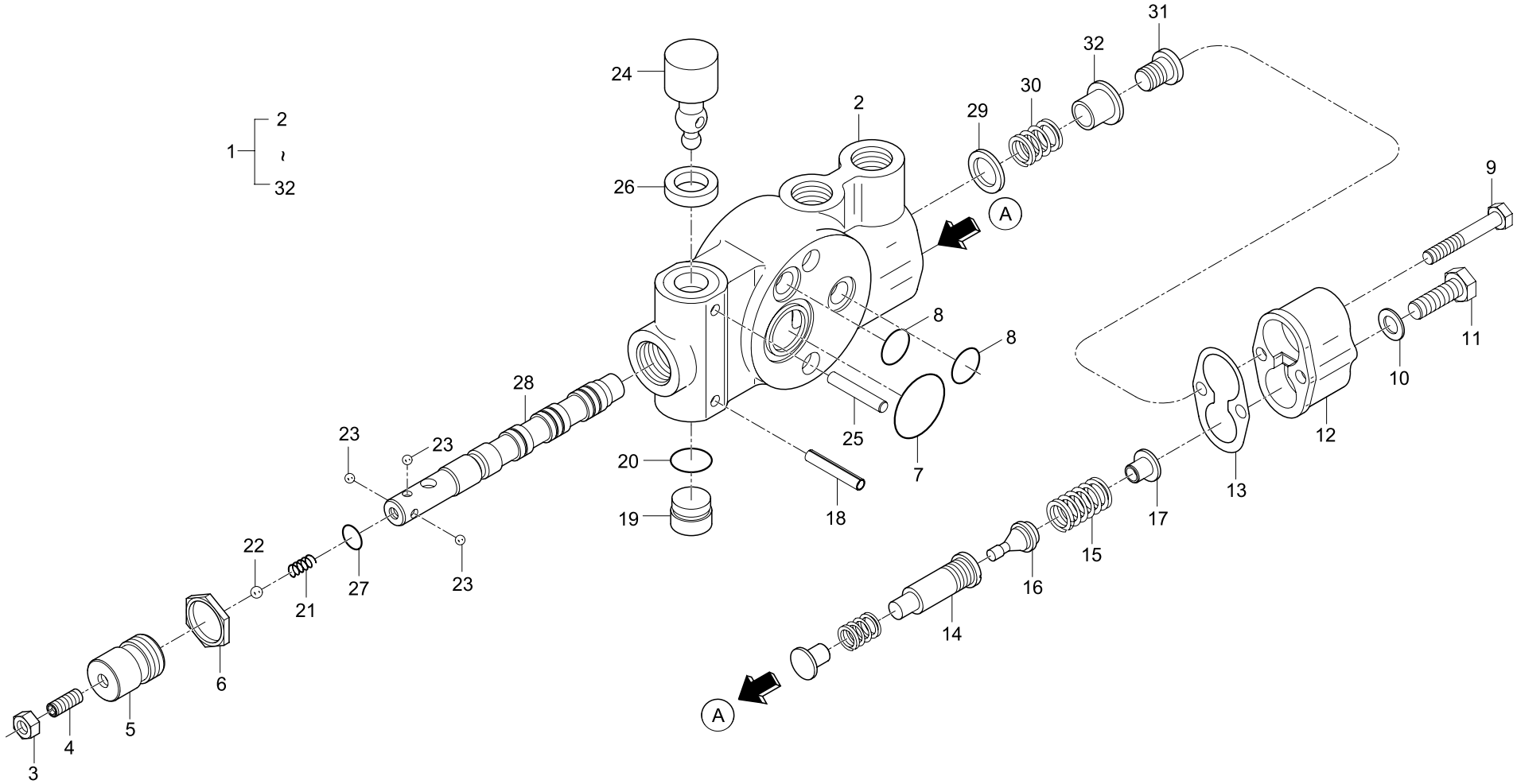

REF. NO	PART. NO	DESCRIPTION	Q'TY								I.C	REMARK
			CK20	CK20J	CK20H	CK20HJ	CK20-EU	CK20J-EU	CK20H-EU	CK20HJ-EU		
01	008264	DETENT DOUBLE VALVE ASS'Y	1	1	1	1	1	1	1	1		
02	200024010	BODY	1	1	1	1	1	1	1	1		
03	310006000	NUT	1	1	1	1	1	1	1	1		
04	300017000	SCREW	1	1	1	1	1	1	1	1		
05	410003000	COVER	1	1	1	1	1	1	1	1		
06	310021000	NUT	1	1	1	1	1	1	1	1		
07	360037000	O-RING	1	1	1	1	1	1	1	1		
08	360013000	O-RING	2	2	2	2	2	2	2	2		
09	300091000	BOLT	2	2	2	2	2	2	2	2		
10	320048000	WASHER	2	2	2	2	2	2	2	2		
11	300070000	SCREW	1	1	1	1	1	1	1	1		
12	200001000	COVER	1	1	1	1	1	1	1	1		
13	360047000	SEAL, COVER	1	1	1	1	1	1	1	1		
14	200007180	VALVE, SEAT	1	1	1	1	1	1	1	1		
15	350027000	SPRING	1	1	1	1	1	1	1	1		
16	200002050	VALVE	1	1	1	1	1	1	1	1		
17	200004020	VALVE, SEAT	1	1	1	1	1	1	1	1		
18	380015000	PIN, ELASTIC	1	1	1	1	1	1	1	1		
19	440031000	PLUG	1	1	1	1	1	1	1	1		
20	360011000	O-RING	1	1	1	1	1	1	1	1		
21	350073000	SPRING	1	1	1	1	1	1	1	1		
22	450007000	BALL	1	1	1	1	1	1	1	1		
23	450006000	BALL	3	3	3	3	3	3	3	3		
24	200027100	ARTICULATION	1	1	1	1	1	1	1	1		
25	460006000	PIN	1	1	1	1	1	1	1	1		

REF. NO	PART. NO	DESCRIPTION	Q'TY								I.C	REMARK
			CK20	CK20J	CK20H	CK20HJ	CK20-EU	CK20J-EU	CK20H-EU	CK20HJ-EU		
26	360049000	RING, SEAL	1	1	1	1	1	1	1	1		
27	360046000	O-RING	1	1	1	1	1	1	1	1		
28	200005060	SPOOL, PILOT	1	1	1	1	1	1	1	1		
29	320047000	WASHER	1	1	1	1	1	1	1	1		
30	350024000	SPRING	1	1	1	1	1	1	1	1		
31	300090000	SCREW	1	1	1	1	1	1	1	1		
32	400049000	SPACER	1	1	1	1	1	1	1	1		

T710 POSITION CONTROL VALVE GROUP

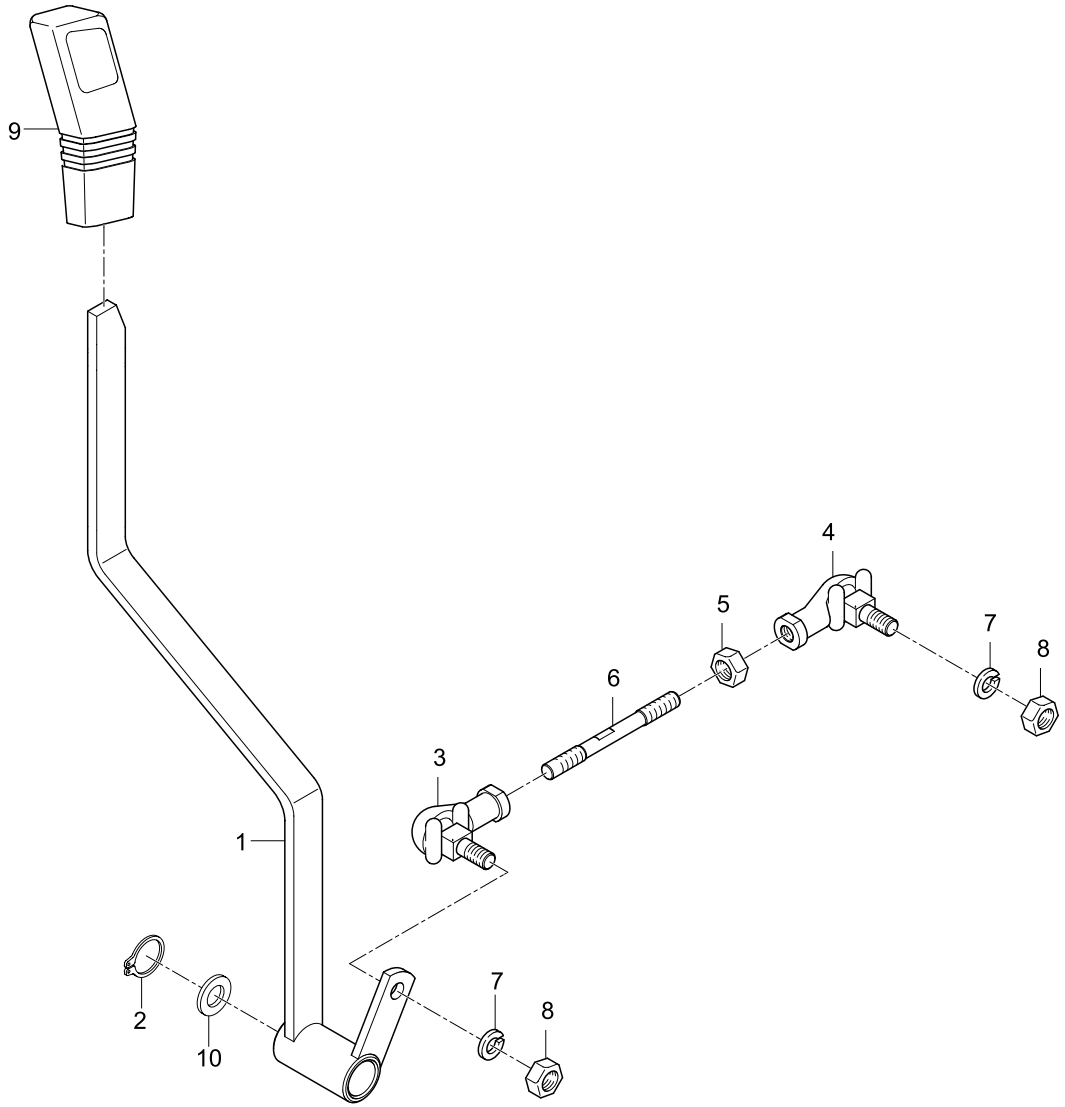

REF. NO	PART. NO	DESCRIPTION	Q'TY								I.C	REMARK
			CK20	CK20J	CK20H	CK20HJ	CK20-EU	CK20J-EU	CK20H-EU	CK20HJ-EU		
01	T2350-65411	LEVER, POSITION CONTROL	1	1	1	1	1	1	1	1		
01	T2350-65412	LEVER, POSITION CONTROL	1	1	1	1	1	1	1	1		
02	04612-00160	RING, SNAP	1	1	1	1	1	1	1	1		
03	K2400-22521	JOINT, BALL (LH)	1	1	1	1	1	1	1	1		
04	K2400-22541	JOINT, BALL (RH)	1	1	1	1	1	1	1	1		
05	02114-50080	NUT	1	1	1	1	1	1	1	1		
06	T2350-65421	ROD (POSITION CONTROL)	2	2	2	2	2	2	2	2		
07	04512-50080	WASHER, SPRING	2	2	2	2	2	2	2	2		
08	02114-50080	NUT	1	1	1	1	1	1	1	1		
09	T2350-24461	GRIP (POSITION CONTROL LEVER)	1	1	1	1	1	1	1	1		
09	T2350-24462	GRIP (POSITION CONTROL LEVER)	1	1	1	1	1	1	1	1		
10	04013-50160	WASHER, PLAIN	1	1	1	1	1	1	1	1		

T720 DOWN SPEED CONTROL GROUP

Old Revision

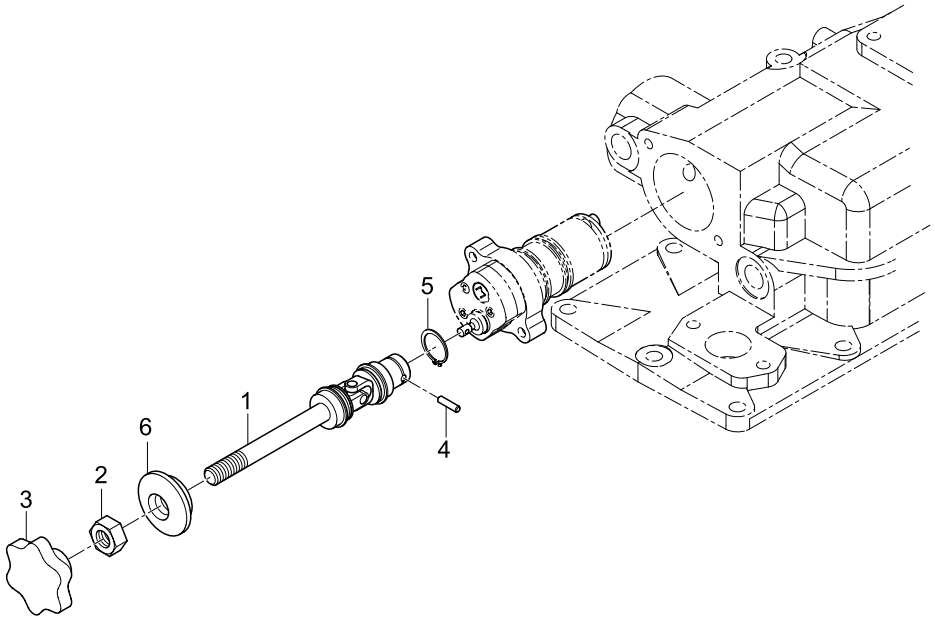

New Revision

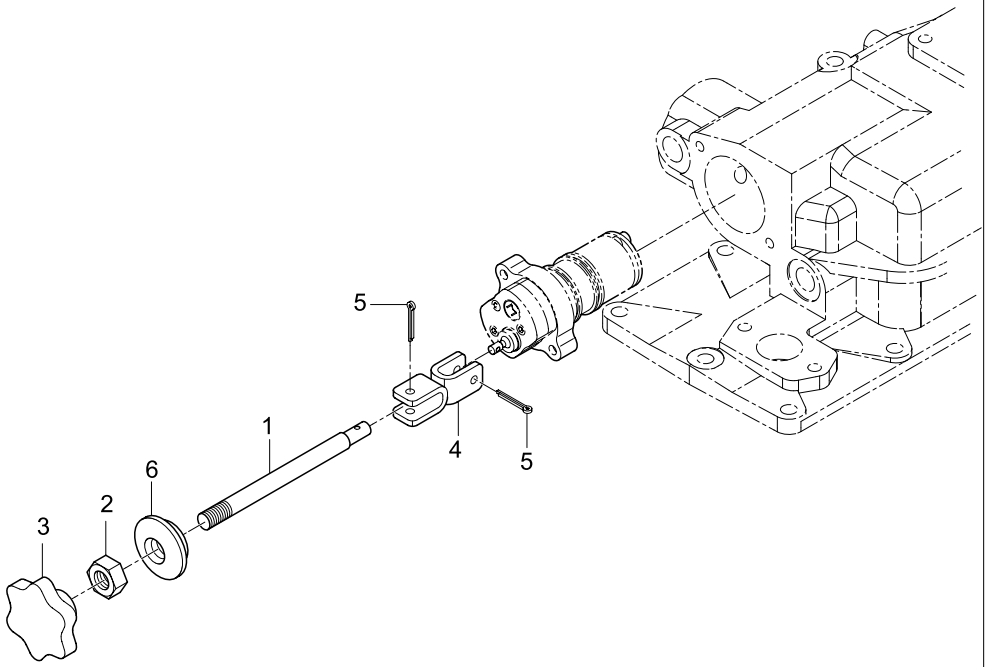

REF. NO	PART. NO	DESCRIPTION	Q'TY								I.C	REMARK
			CK20	CK20J	CK20H	CK20HJ	CK20-EU	CK20J-EU	CK20H-EU	CK20HJ-EU		
01	T2350-65321	ROD, HYDRAULIC CONTROL	1	1	1	1	1	1	1	1		
01	T2350-65371	ROD, HYDRAULIC CONTROL	1	1	1	1	1	1	1	1		2005.07.01~
02	02176-50100	NUT	1	1	1	1	1	1	1	1		
03	T2610-39881	GRIP	1	1	1	1	1	1	1	1		
03	T2610-39882	GRIP	1	1	1	1	1	1	1	1		
04	T2350-65341	PIN	1	1	1	1	1	1	1	1		
04	T4628-66211	U-BRACKET	1	1	1	1	1	1	1	1		2005.07.01~
05	04612-00160	RING, SNAP	1	1	1	1	1	1	1	1		
05	05512-00425	PIN, SPLIT	2	2	2	2	2	2	2	2		2005.07.01~
06	T4620-50592	RUBBER, CUSHION	1	1	1	1	1	1	1	1		

T730 THREE POINT LINK SYSTEM GROUP

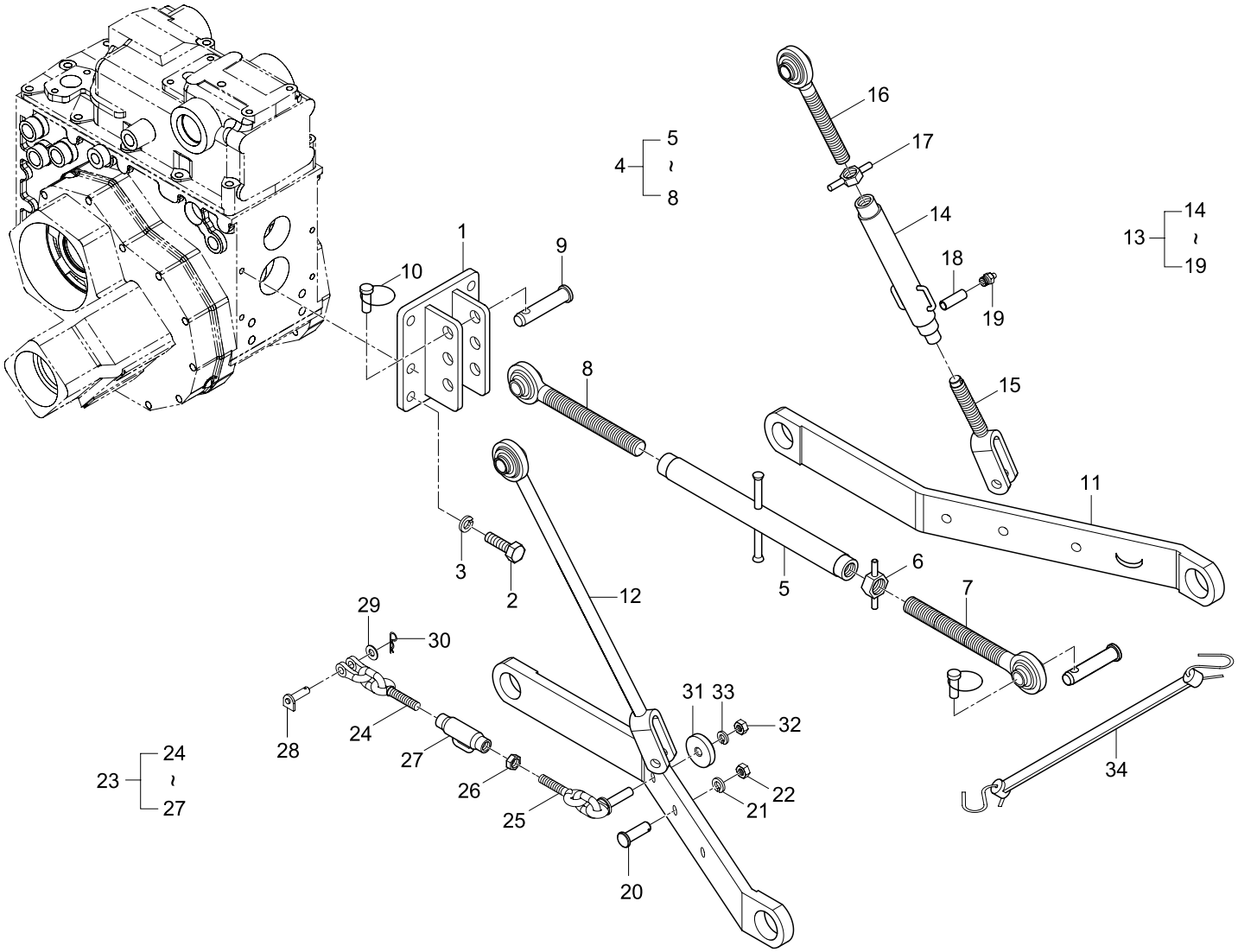

REF. NO	PART. NO	DESCRIPTION	Q'TY								I.C	REMARK
			CK20	CK20J	CK20H	CK20HJ	CK20-EU	CK20J-EU	CK20H-EU	CK20HJ-EU		
01	T2350-22141	BRACKET, TOP LINK	1	1	1	1	1	1	1	1		
02	01173-51435	BOLT	6	6	6	6	6	6	6	6		
03	04512-50140	WASHER, SPRING	6	6	6	6	6	6	6	6		
04	T2350-71102	TOP LINK ASS'Y	1	1	1	1	1	1	1	1		
05	T2350-71112	LINK, TOP	1	1	1	1	1	1	1	1		
06	T4620-85451	NUT	1	1	1	1	1	1	1	1		
07	32240-7121-4	JOINT, TOP LINK (RH)	1	1	1	1	1	1	1	1		
08	32240-7122-4	JOINT, TOP LINK (LH)	1	1	1	1	1	1	1	1		
09	31150-7136-5	PIN, TOP LINK	2	2	2	2	2	2	2	2		
10	34150-3764-4	PIN, CLIP	4	4	4	4	4	4	4	4		
11	T2350-71312	LOWER LINK ASS'Y	2	2	2	2	2	2	2	2		
12	T2350-71512	LIFT ROD ASS'Y (LH)	1	1	1	1	1	1	1	1		
13	T2350-71612	LIFT ROD ASS'Y (RH)	1	1	1	1	1	1	1	1		
14	T2350-71532	MIDDLE, LIFT ROD	1	1	1	1	1	1	1	1		
15	T2350-71622	LOWER, LIFT ROD	1	1	1	1	1	1	1	1		
16	T2350-71652	UPPER, LIFT ROD	1	1	1	1	1	1	1	1		
17	35110-7157-1	NUT	1	1	1	1	1	1	1	1		
18	05411-00320	PIN, SPRING	1	1	1	1	1	1	1	1		
19	06613-10675	NIPPLE, GREASE	1	1	1	1	1	1	1	1		
20	T2350-71221	PIN, JOINT	2	2	2	2	2	2	2	2		
21	04512-50120	WASHER, SPRING	2	2	2	2	2	2	2	2		
22	02114-50120	NUT	2	2	2	2	2	2	2	2		
23	T2350-71801	CHECK CHAIN ASS'Y	2	2	2	2	2	2	2	2		
23	T2350-71802	CHECK CHAIN ASS'Y	2	2	2	2	2	2	2	2		
24	35110-7181-1	CHAIN, CHECK (FRONT)	2	2	2	2	2	2	2	2		

REF. NO	PART. NO	DESCRIPTION	Q'TY								I.C	REMARK
			CK20	CK20J	CK20H	CK20HJ	CK20-EU	CK20J-EU	CK20H-EU	CK20HJ-EU		
25	T2350-71821	CHAIN, CHECK (REAR)	2	2	2	2	2	2	2	2		
26	02052-50140	NUT	2	2	2	2	2	2	2	2		
27	T2350-22841	TURN-BUCKLE	2	2	2	2	2	2	2	2		
28	99571-2282-3	PIN	2	2	2	2	2	2	2	2		
29	04013-50100	WASHER, PLAIN	2	2	2	2	2	2	2	2		
30	05515-51000	PIN, SNAP	2	2	2	2	2	2	2	2		
31	T2350-71831	COLLAR	2	2	2	2	2	2	2	2		
32	02076-50140	NUT	2	2	2	2	2	2	2	2		
33	04512-50140	WASHER, SPRING	2	2	2	2	2	2	2	2		
34	T2610-21321	CHECK LINK ASS'Y	1	1	1	1	1	1	1	1		

T740 DRAWBAR GROUP

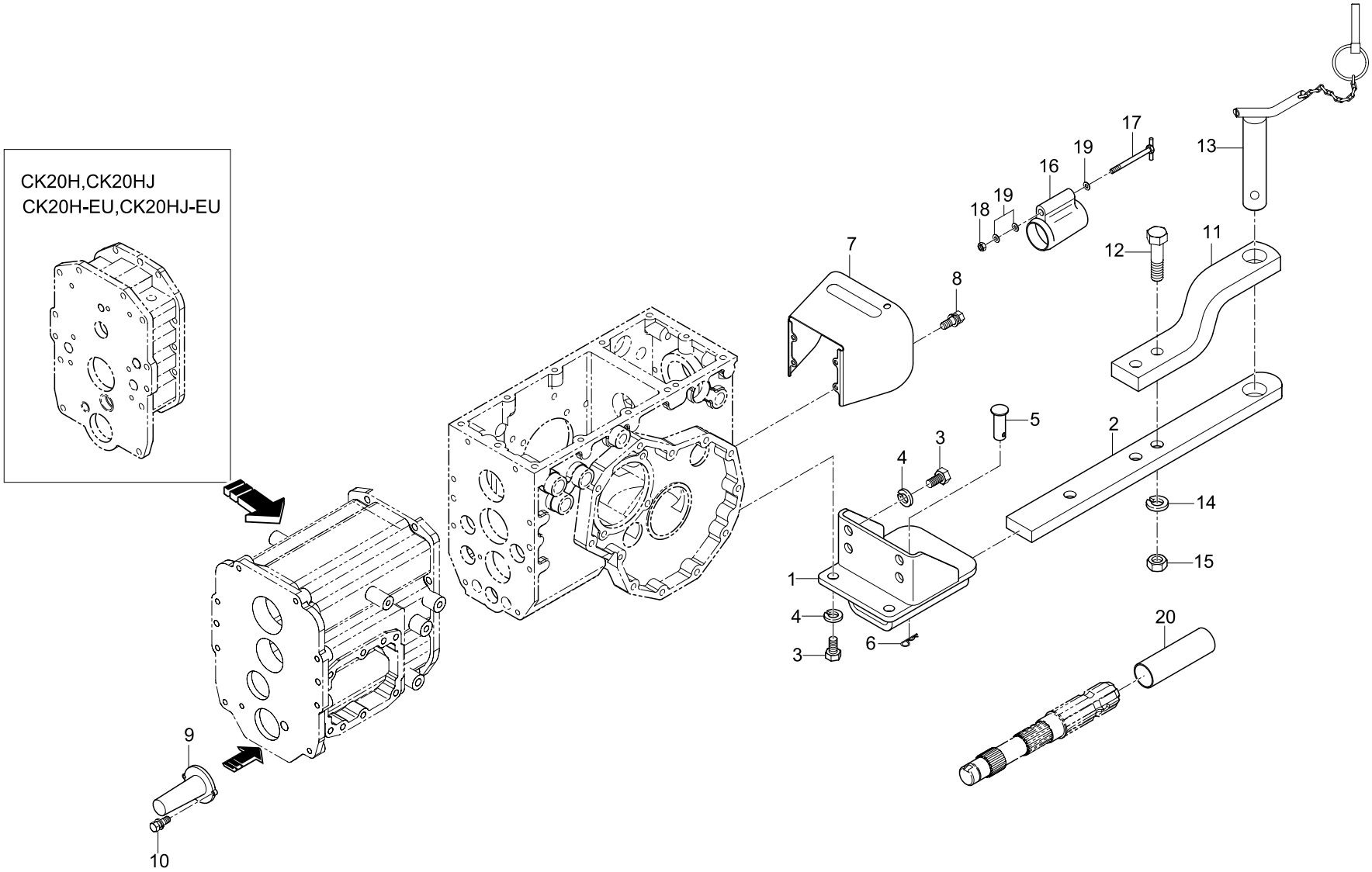

REF. NO	PART. NO	DESCRIPTION	Q'TY								I.C	REMARK
			CK20	CK20J	CK20H	CK20HJ	CK20-EU	CK20J-EU	CK20H-EU	CK20HJ-EU		
01	T2350-29811	HITCH	1	1	1	1	1	1	1	1		
01	T2350-29812	HITCH	1	1	1	1	1	1	1	1		
02	T2350-78291	DRAWBAR	1	1	1	1						
02	T2351-78291	DRAWBAR					1	1	1	1		
03	01173-51425	BOLT	6	6	6	6	6	6	6	6		
04	04512-50140	WASHER, SPRING	6	6	6	6	6	6	6	6		
05	05122-51665	PIN, JOINT	1	1	1	1	1	1	1	1		
06	05515-51600	PIN, SNAP	1	1	1	1	1	1	1	1		
07	T2350-25491	COVER, PTO SHAFT SHIELD	1	1	1	1	1	1	1	1		
08	01133-51016	BOLT	4	4	4	4	4	4	4	4		
09	T2350-24191	COVER, SHIELD (MID PTO)	1	1	1	1	1	1	1	1		
10	01123-50816	BOLT	2	2	2	2	2	2	2	2		
11	T2611-29841	BRACKET					1	1	1	1		
12	01176-51675	BOLT					1	1	1	1		
13	T2611-29851	PIN, JOINT					1	1	1	1		
14	04512-50160	WASHER, SPRING					2	2	2	2		
15	02076-50160	NUT					2	2	2	2		
16	34350-2544-4	COVER, PTO SHAFT					1	1	1	1		
17	34150-2546-1	BOLT					1	1	1	1		
18	02016-50100	NUT					1	1	1	1		
19	04013-50100	WASHER, PLAIN					3	3	3	3		
20	T2240-25452	COVER, PTO SHAFT	1	1	1	1						

T750 BONNET 1 GROUP

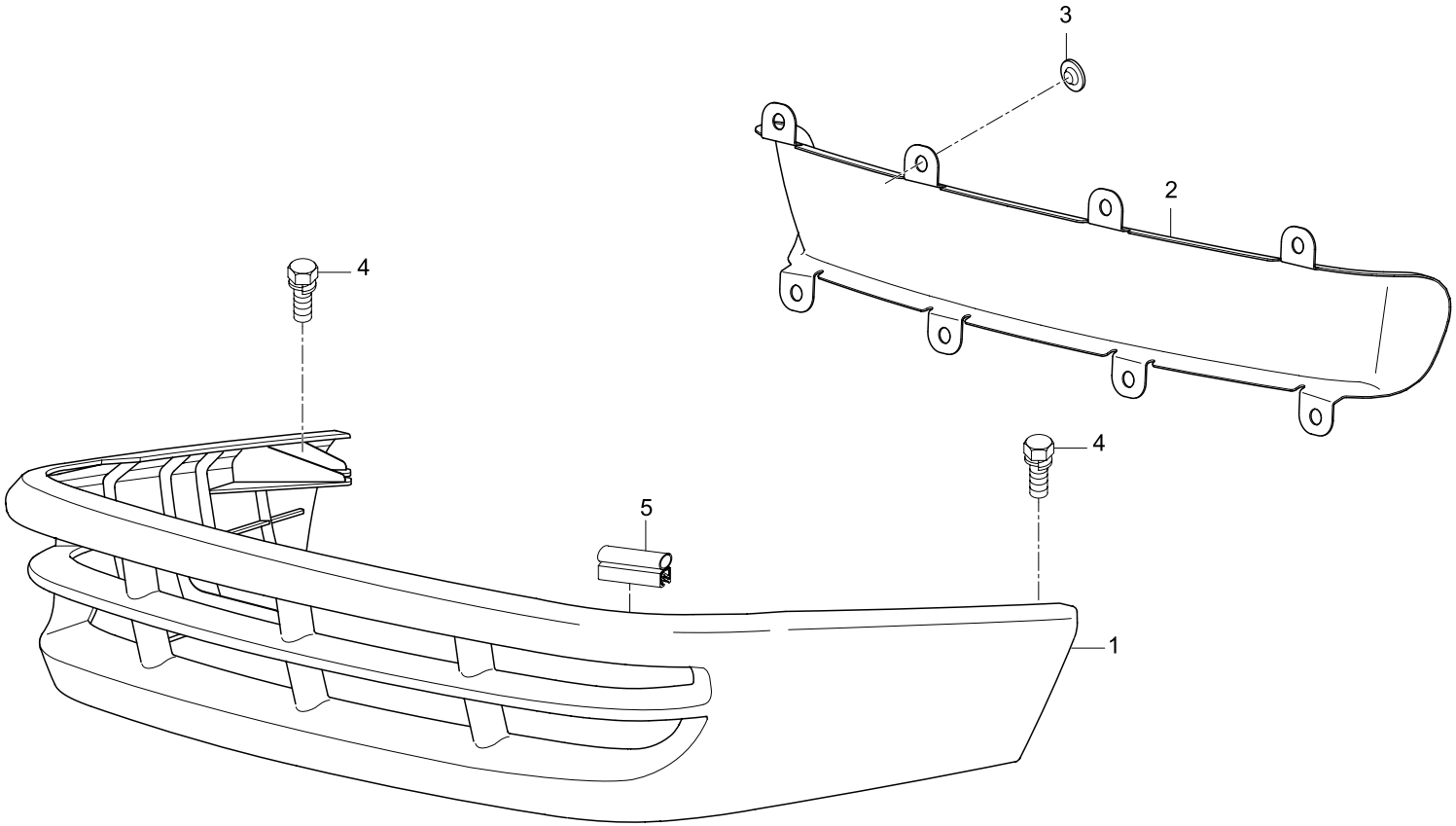

REF. NO	PART. NO	DESCRIPTION	Q'TY								I.C	REMARK
			CK20	CK20J	CK20H	CK20HJ	CK20-EU	CK20J-EU	CK20H-EU	CK20HJ-EU		
01	T2350-50801	GRILL, FRONT	1	1	1	1	1	1	1	1		
02	T2350-50811	NET, FRONT GRILL	1	1	1	1	1	1	1	1		
03	T4620-50701	STOPPER	8	8	8	8	8	8	8	8		
04	01025-50616	BOLT	6	6	6	6	6	6	6	6		
05	T2350-50901	RUBBER	1	1	1	1	1	1	1	1		

T760 BONNET 2 GROUP

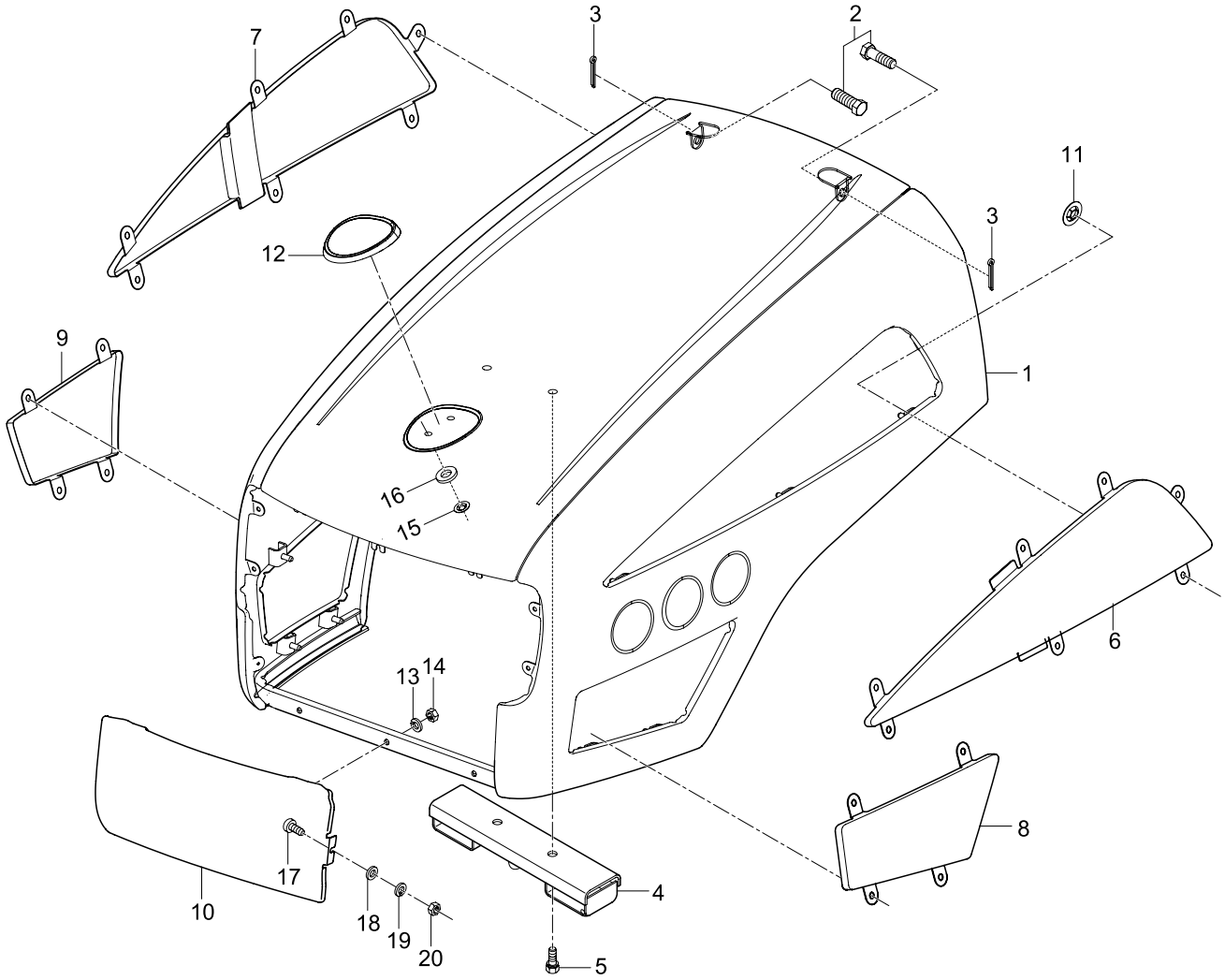

REF. NO	PART. NO	DESCRIPTION	Q'TY								I.C	REMARK
			CK20	CK20J	CK20H	CK20HJ	CK20-EU	CK20J-EU	CK20H-EU	CK20HJ-EU		
01	T2350-50702	BONNET ASS'Y	1	1	1	1						
01	T2350-50703	BONNET ASS'Y	1	1	1	1	1	1	1	1		
01	T2350-50704	BONNET ASS'Y	1	1	1	1	1	1	1	1		
02	T2350-50632	BOLT (BONNET)	2	2	2	2	2	2	2	2		
03	05511-51615	PIN, SPLIT	2	2	2	2	2	2	2	2		
04	T2350-50612	HOLDER, BONNET	1	1	1	1	1	1	1	1		
05	01123-51020	BOLT	2	2	2	2	2	2	2	2		
06	T2350-50752	NET 1	1	1	1	1	1	1	1	1		
06	T2350-50753	NET 1	1	1	1	1	1	1	1	1		
07	T2350-50762	NET 2	1	1	1	1	1	1	1	1		
07	T2350-50763	NET 2	1	1	1	1	1	1	1	1		
08	T2350-50772	NET 3	1	1	1	1	1	1	1	1		
09	T2350-50782	NET 4	1	1	1	1	1	1	1	1		
10	T2350-50792	NET 5	1	1	1	1	1	1	1	1		
10	T2350-50793	NET 5	1	1	1	1	1	1	1	1		
11	T4620-50701	STOPPER	22	22	22	22	22	22	22	22		
12	T2330-50471	MASCOT	1	1	1	1	1	1	1	1		
12	T2185-51462	EMBLEM	1	1	1	1	1	1	1	1		
13	04512-50060	WASHER, SPRING	3	3	3	3	3	3	3	3		
14	02114-50060	NUT	3	3	3	3	3	3	3	3		
15	T4620-50701	STOPPER	2	2	2	2	2	2	2	2		
16	82KC-0641	PLATE, RUBBER	2	2	2	2	2	2	2	2		
17	03054-50516	SCREW	2	2	2	2	2	2	2	2		
18	04013-50050	WASHER, PLAIN	2	2	2	2	2	2	2	2		
19	04512-50050	WASHER, SPRING	2	2	2	2	2	2	2	2		

REF. NO	PART. NO	DESCRIPTION	Q'TY								I.C	REMARK
			CK20	CK20J	CK20H	CK20HJ	CK20-EU	CK20J-EU	CK20H-EU	CK20HJ-EU		
20	02114-50050	NUT	2	2	2	2	2	2	2	2		

T770 BONNET 3 GROUP

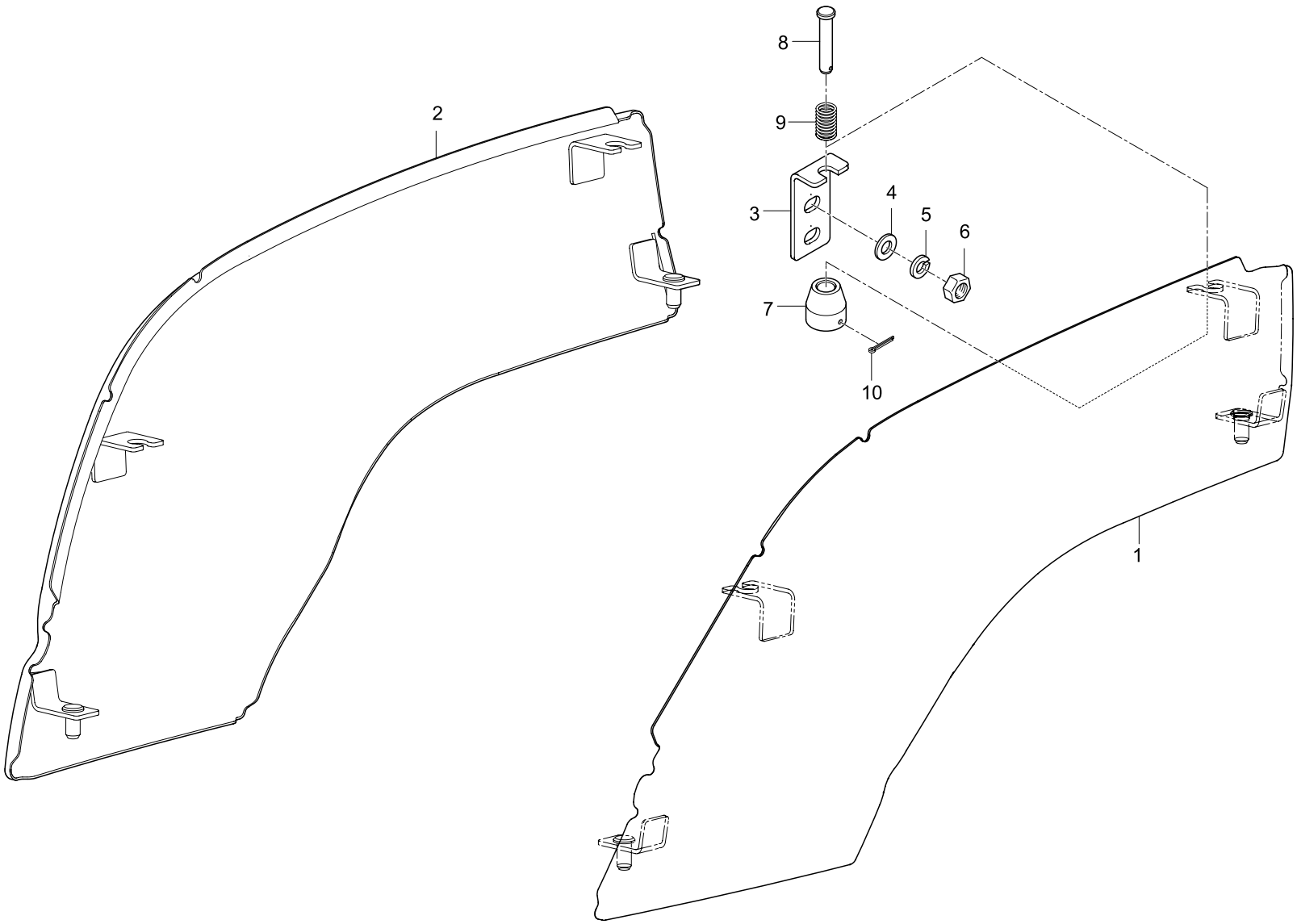

REF. NO	PART. NO	DESCRIPTION	Q'TY								I.C	REMARK
			CK20	CK20J	CK20H	CK20HJ	CK20-EU	CK20J-EU	CK20H-EU	CK20HJ-EU		
01	T2350-50821	COVER, SIDE (LH)	1	1	1	1	1	1	1	1		
02	T2350-50831	COVER, SIDE (RH)	1	1	1	1	1	1	1	1		
03	T2350-50841	PLATE (SIDE COVER STOPPER)	4	4	4	4	4	4	4	4		
04	04013-50080	WASHER, PLAIN	8	8	8	8	8	8	8	8		
05	04512-50080	WASHER, SPRING	8	8	8	8	8	8	8	8		
06	02114-50080	NUT	8	8	8	8	8	8	8	8		
07	T2350-50851	SPACER (SIDE COVER STOPPER)	4	4	4	4	4	4	4	4		
08	05122-50635	PIN, JOINT	4	4	4	4	4	4	4	4		
09	T2350-50871	SPRING (SIDE COVER)	4	4	4	4	4	4	4	4		
10	05511-51620	PIN, SPLIT	4	4	4	4	4	4	4	4		

T780 FRAME GROUP

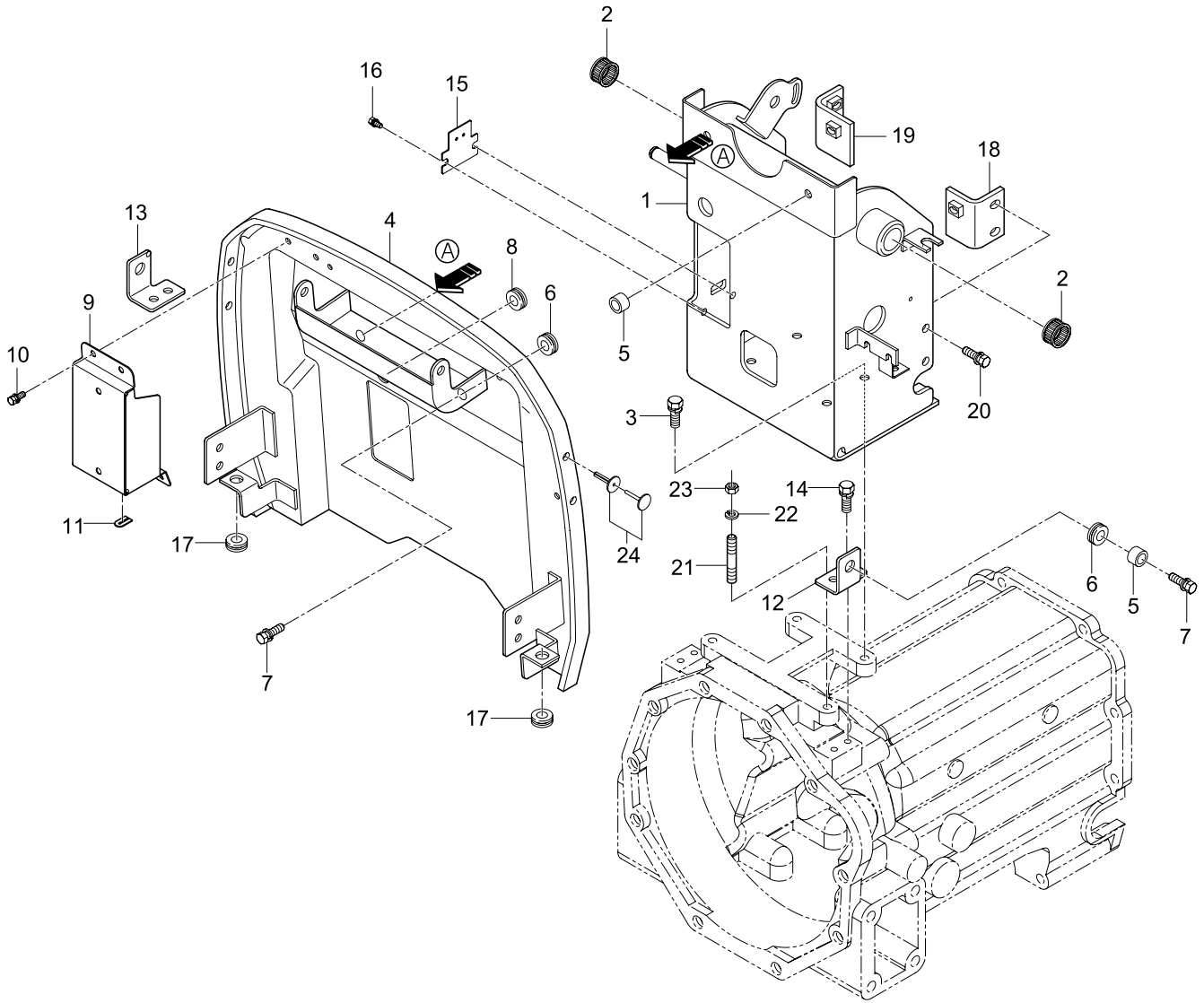

REF. NO	PART. NO	DESCRIPTION	Q'TY								I.C	REMARK
			CK20	CK20J	CK20H	CK20HJ	CK20-EU	CK20J-EU	CK20H-EU	CK20HJ-EU		
01	T2350-55102	FRAME ASS'Y	1	1	1	1	1	1	1	1		
01	T2350-55103	FRAME ASS'Y	1	1	1	1	1	1	1	1		
01	T2350-55104	FRAME ASS'Y	1	1	1	1	1	1	1	1		
02	08822-53017	BEARING, NEEDLE	2	2	2	2	2	2	2	2		
03	01133-51025	BOLT	2	2	2	2	2	2	2	2		
04	T2350-55035	PLATE, SHUTTLE	1	1	1	1						
04	T2351-55032	PLATE, SHUTTLE					1	1	1	1		
05	T2350-50421	SPACER (RADIATOR SUPPORT)	4	4	4	4	4	4	4	4		
06	T2350-50431	GROMMET (RADIATOR SUPPORT)	4	4	4	4	4	4	4	4		
07	01127-50825	BOLT	4	4	4	4	4	4	4	4		
08	31355-2949-1	GROMMET	1	1	1	1	1	1	1	1		
09	T2350-55271	COVER, FUSE BOX	1	1	1	1	1	1	1	1		
10	01023-50612	BOLT	4	4	4	4	4	4	4	4		
11	T2350-55281	U-RUBBER	1	1	1	1	1	1	1	1		
12	T2350-57211	BRACKET, SHUTTLE PLATE SUPPORT (LH)	1	1	1	1	1	1	1	1		
13	T2350-57221	BRACKET, SHUTTLE PLATE SUPPORT (RH)	1	1	1	1	1	1	1	1		
14	01133-51020	BOLT	4	4	4	4	4	4	4	4		
15	T2350-55291	PLATE, SENSOR HOLDER	1	1	1	1	1	1	1	1		
			~3193-00010	~3194-00320	~3195-00120	~D196-00200	~D050-00080	~D050-00080	~D051-00120	~D051-00120		
16	01023-50612	BOLT	2	2	2	2	2	2	2	2		
			~3193-00010	~3194-00320	~3195-00120	~D196-00200	~D050-00080	~D050-00080	~D051-00120	~D051-00120		
17	T4682-50251	GROMMET (BONNET)	2	2	2	2	2	2	2	2		
18	T2350-55301	HOLDER(LH)	1	1	1	1	1	1	1	1		
19	T2350-55331	HOLDER(RH)	1	1	1	1	1	1	1	1		
20	01123-50616	BOLT	1	1	1	1	1	1	1	1		
21	01517-51020	STUD	2	2	2	2	2	2	2	2		
22	04512-50100	WASHER, SPRING	2	2	2	2	2	2	2	2		

REF. NO	PART. NO	DESCRIPTION	Q'TY								I.C	REMARK
			CK20	CK20J	CK20H	CK20HJ	CK20-EU	CK20J-EU	CK20H-EU	CK20HJ-EU		
23	02114-50100	NUT	2	2	2	2	2	2	2	2		
24	T2351-57131	PLUG					2	2	2	2		

T790 FUEL TANK GROUP

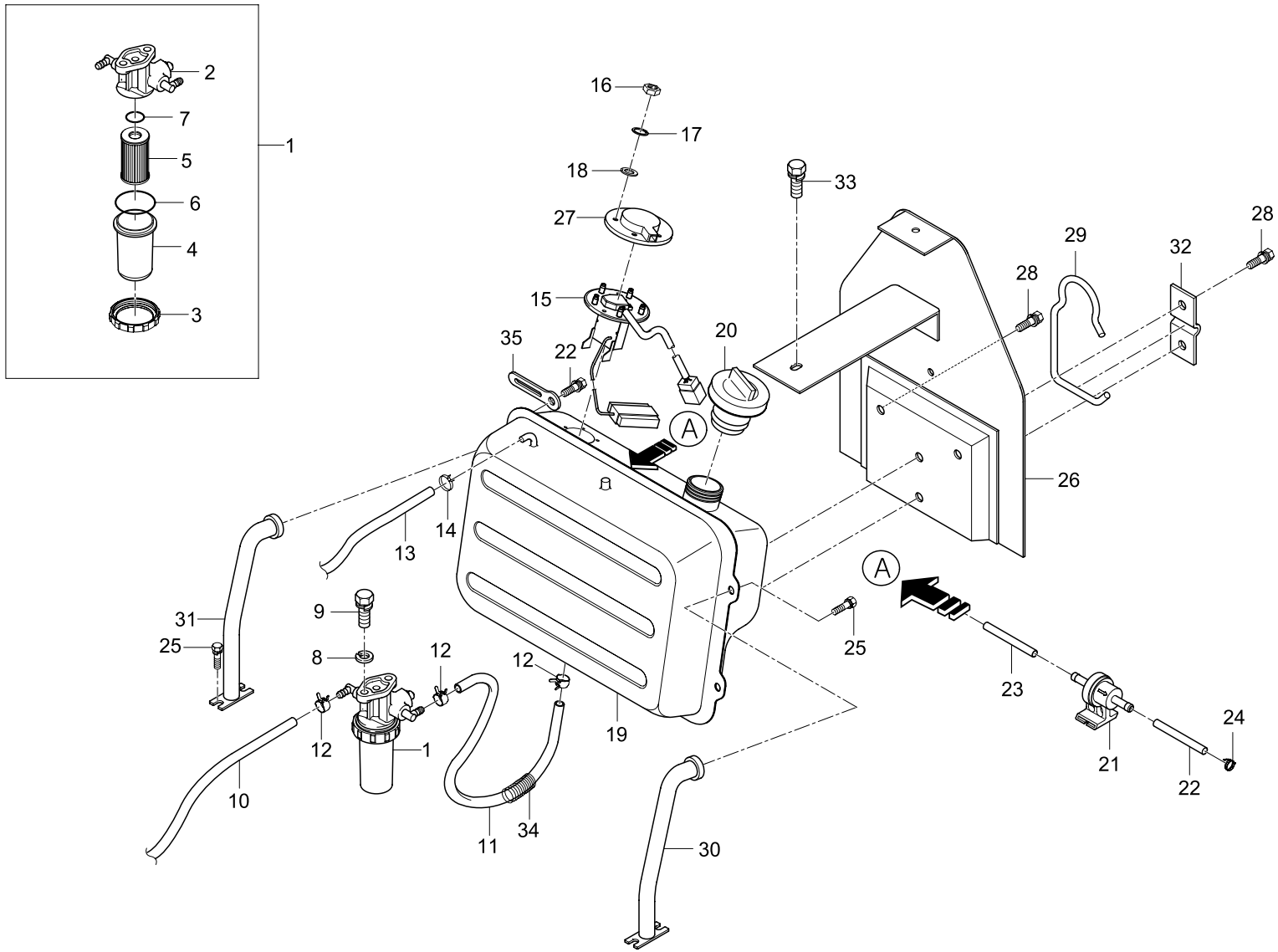

REF. NO	PART. NO	DESCRIPTION	Q'TY								I.C	REMARK
			CK20	CK20J	CK20H	CK20HJ	CK20-EU	CK20J-EU	CK20H-EU	CK20HJ-EU		
01	T2350-35011	FUEL FILTER ASS'Y	1	1	1	1	1	1	1	1		
02	76KD-1025-1	BODY, FUEL FILTER	1	1	1	1	1	1	1	1		
03	76KD-1039	NUT	1	1	1	1	1	1	1	1		
04	76KD-1031-1	CAP, FILTER	1	1	1	1	1	1	1	1		
05	76KD-1033-1	ELEMENT, FILTER	1	1	1	1	1	1	1	1		
06	76KD-1032	O-RING	1	1	1	1	1	1	1	1		
07	76KD-1038	O-RING	2	2	2	2	2	2	2	2		
08	04013-50100	WASHER, SPRING	2	2	2	2	2	2	2	2		
09	01133-51016	BOLT	2	2	2	2	2	2	2	2		
10	T2350-35512	HOSE 1, FUEL	1	1	1	1	1	1	1	1		
11	T2350-35521	HOSE 2, FUEL	1	1	1	1	1	1	1	1		
12	14911-4275-1	CLIP, HOSE	4	4	4	4	4	4	4	4		
13	T2350-35531	HOSE 3, FUEL	1	1	1	1	1	1	1	1		
14	14971-4275-1	CLAMP, HOSE	2	2	2	2	2	2	2	2		
15	T2350-69211	FUEL SENDER ASS'Y	1	1	1	1	1	1	1	1		
15	T2350-69212	FUEL SENDER ASS'Y	1	1	1	1	1	1	1	1		
15	T2350-69213	FUEL SENDER ASS'Y	1	1	1	1	1	1	1	1		
16	02054-50040	NUT	5	5	5	5	5	5	5	5		
17	04512-50040	WASHER, SPRING	5	5	5	5	5	5	5	5		
18	04012-50040	WASHER, PLAIN	5	5	5	5	5	5	5	5		
19	T2350-81113	FUEL TANK ASS'Y	1	1	1	1	1	1	1	1		
19	T2350-81114	FUEL TANK ASS'Y	1	1	1	1	1	1	1	1		
20	T2611-54821	CAP, FUEL	1	1	1	1	1	1	1	1		
20	T2611-54822	CAP, FUEL	1	1	1	1	1	1	1	1		
21	T2611-54831	FILTER, FUEL	1 ~3193-00010	1 ~3194-00190	1 ~3195-00020	1 ~3196-00297	1 ~3050-00141	1 ~3050-00141	1 ~3051-00205	1 ~3051-00205		Deleted

REF. NO	PART. NO	DESCRIPTION	Q'TY								I.C	REMARK
			CK20	CK20J	CK20H	CK20HJ	CK20-EU	CK20J-EU	CK20H-EU	CK20HJ-EU		
22	09661-40070	HOSE, FUEL	1 ~3193-00010	1 ~3194-00190	1 ~3195-00020	1 ~3196-00297	1 ~3050-00141	1 ~3050-00141	1 ~3051-00205	1 ~3051-00205		Deleted
23	09661-40300	HOSE, FUEL	1	1	1	1	1	1	1	1		
23	E1400-54731	HOSE, FUEL	1 ~3193-00010	1 ~3194-00190	1 ~3194-00190	1 ~3196-00297	1 ~3050-00141	1 ~3050-00141	1 ~3051-00205	1 ~3051-00205		Deleted
24	15271-4271-1	CLIP	1 ~3193-00010	1 ~3194-00190	1 ~3195-00020	1 ~3196-00297	1 ~3050-00141	1 ~3050-00141	1 ~3051-00205	1 ~3051-00205		Deleted
25	01123-50816	BOLT	5	5	5	5	5	5	5	5		
26	T2350-81132	COVER, SHIELD	1	1	1	1	1	1	1	1		
27	T2350-81141	COVER, FUEL SENDER	1	1	1	1	1	1	1	1		
28	01123-50816	BOLT	4	4	4	4	4	4	4	4		
29	T2350-81151	RING	1	1	1	1	1	1	1	1		
30	T2350-81161	SUPPORT, TANK (LH)	1	1	1	1	1	1	1	1		
31	T2350-81171	SUPPORT, TANK (RH)	1	1	1	1	1	1	1	1		
32	T2350-81191	HOOK, TOP LINK	1	1	1	1	1	1	1	1		
33	01025-50616	BOLT	2	2	2	2	2	2	2	2		
34	67111-5832-3	SPRING	1	1	1	1	1	1	1	1		
35	37150-3447-1	CLAMP, HARNESS	1	1	1	1	1	1	1	1		

T800 ACCELERATOR GROUP

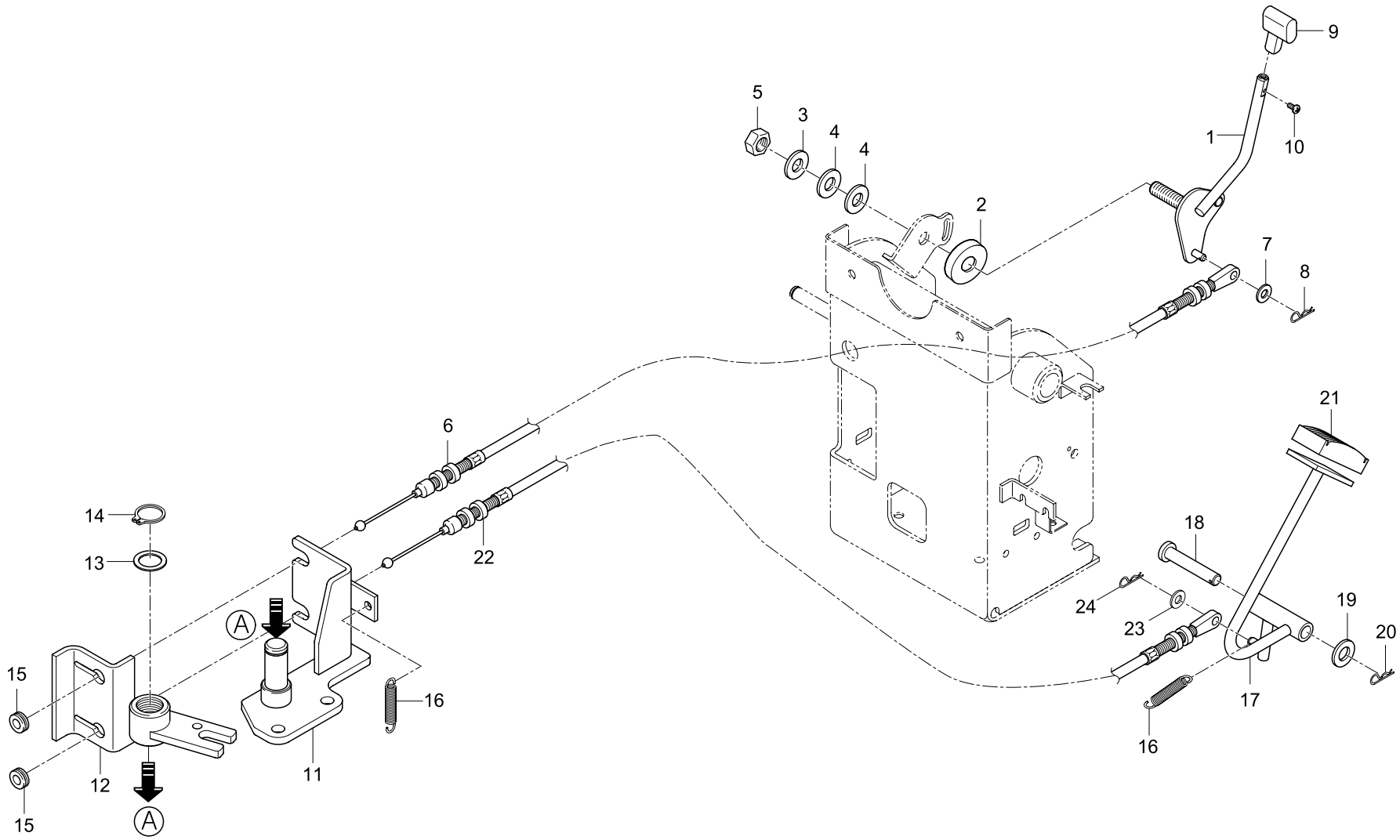

REF. NO	PART. NO	DESCRIPTION	Q'TY								I.C	REMARK
			CK20	CK20J	CK20H	CK20HJ	CK20-EU	CK20J-EU	CK20H-EU	CK20HJ-EU		
01	T2350-60083	LEVER 1, ACCELERATOR	1	1	1	1	1	1	1	1		
02	T2670-60091	LINING, BRAKE	1	1	1	1	1	1	1	1		
03	04013-50120	WASHER, PLAIN	1	1	1	1	1	1	1	1		
04	T4835-17241	SPRING	2	2	2	2	2	2	2	2		
05	02174-50120	NUT	2	2	2	2	2	2	2	2		
06	T2350-60021	CABLE 1, ACCELERATOR	1	1	1	1	1	1	1	1		
07	04013-50060	WASHER, PLAIN	1	1	1	1	1	1	1	1		
08	05525-50600	PIN, SNAP	1	1	1	1	1	1	1	1		
09	T2350-60141	GRIP (HANDLE ACCELERATOR)	1	1	1	1	1	1	1	1		
09	T2350-60142	GRIP (HANDLE ACCELERATOR)	1	1	1	1	1	1	1	1		
10	03024-50516	SCREW	1	1	1	1	1	1	1	1		
11	T2350-60062	BRACKET 1, ACCEL	1	1	1	1	1	1	1	1		
12	T2350-60071	BRACKET 2, ACCEL	1	1	1	1	1	1	1	1		
13	04013-50120	WASHER, PLAIN	1	1	1	1	1	1	1	1		
14	04612-00120	RING, SNAP	1	1	1	1	1	1	1	1		
15	T4682-55801	GROMMET (ACCEL)	2	2	1	1	2	2	1	1		
16	T2350-60131	SPRING	2	2	1	1	2	2	1	1		
17	T2350-60112	LEVER 3, ACCEL	1	1			1	1				
18	05122-50865	PIN, JOINT	1	1			1	1				
19	04013-50080	WASHER, PLAIN	1	1			1	1				
20	05525-50800	PIN, SNAP	1	1			1	1				
21	T2350-26661	RUBBER, HST PEDAL	1	1			1	1				
22	T2350-60051	CABLE 2, ACCELERATOR	1	1			1	1				
23	04013-50060	WASHER, PLAIN	1	1			1	1				
24	05525-50600	PIN, SNAP	1	1			1	1				

T810 INSTRUMENT COVER GROUP

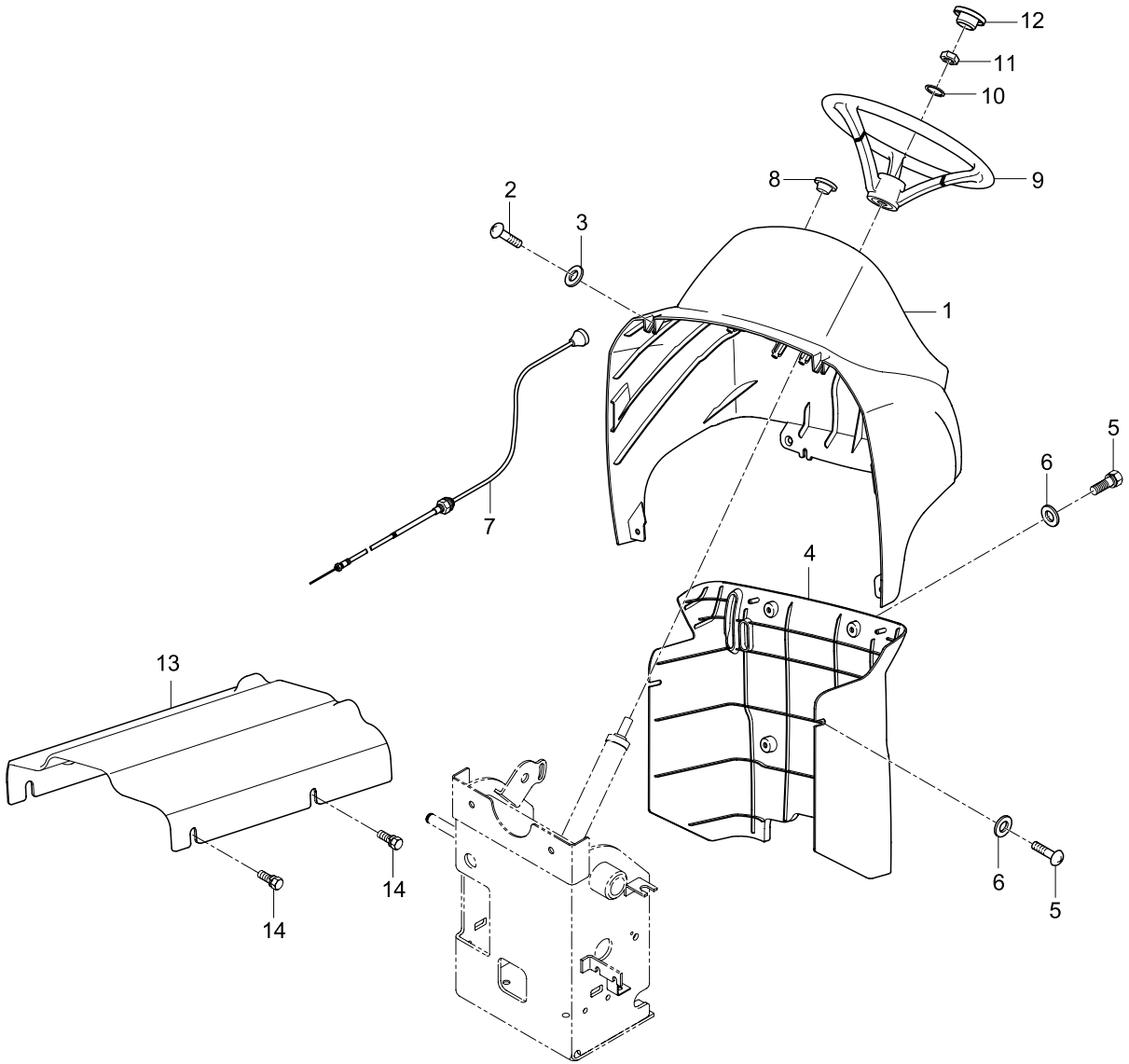

REF. NO	PART. NO	DESCRIPTION	Q'TY								I.C	REMARK
			CK20	CK20J	CK20H	CK20HJ	CK20-EU	CK20J-EU	CK20H-EU	CK20HJ-EU		
01	T2350-55313	COVER, INSTRUMENT (UPPER)	1	1	1	1	1	1	1	1		
01	T2350-55314	COVER, INSTRUMENT (UPPER)	1	1	1	1	1	1	1	1		
01	T2350-55315	COVER, INSTRUMENT (UPPER)	1	1	1	1	1	1	1	1		
02	03004-50616	SCREW	4	4	4	4	4	4	4	4		
02	55571-2128-1	BOLT	4	4	4	4	4	4	4	4		
02	01025-50620	BOLT	4	4	4	4	4	4	4	4		
03	04013-50060	WASHER, PLAIN	4 ~3193-00010	4 ~3194-00260	4 ~3195-00100	4 ~3196-00710	4 ~3050-00173	4 ~3050-00173	4 ~3051-00247	4 ~3051-00247		Deleted
04	T2350-55325	COVER, INSTRUMENT (DOWN)	1	1			1	1				
04	T2350-55326	COVER, INSTRUMENT (DOWN)	1	1			1	1				
04	T2360-55325	COVER, INSTRUMENT (DOWN)			1	1			1	1		
04	T2360-55326	COVER, INSTRUMENT (DOWN)			1	1			1	1		
05	03004-50616	SCREW	6	6	6	6	6	6	6	6		
05	55571-2128-1	SCREW	6	6	6	6	6	6	6	6		
05	01025-50620	SCREW	6	6	6	6	6	6	6	6		
06	04013-50060	WASHER, PLAIN	6 ~3193-00010	6 ~3194-00260	6 ~3195-00100	6 ~3196-00710	6 ~3050-00173	6 ~3050-00173	6 ~3051-00247	6 ~3051-00247		Deleted
07	T2350-55412	WIRE, ENGINE STOP	1	1	1	1	1	1	1	1		
08	T4625-29291	PLUG	1	1	1	1						
09	T2350-55451	HANDLE ASS'Y	1	1	1	1	1	1	1	1		
09	T2350-55452	HANDLE ASS'Y	1	1	1	1	1	1	1	1		
10	04512-50120	WASHER, SPRING	1	1	1	1	1	1	1	1		
11	02176-50120	NUT	1	1	1	1	1	1	1	1		
12	T2350-55461	CAP, HANDLE	1	1	1	1	1	1	1	1		
13	T2360-55373	COVER, TRANSMISSION			1	1			1	1		
13	T2360-55374	COVER, TRANSMISSION			1	1			1	1		
14	01754-50812	BOLT, FLANGE			4	4			4	4		

T815 INSTRUMENT COVER GROUP

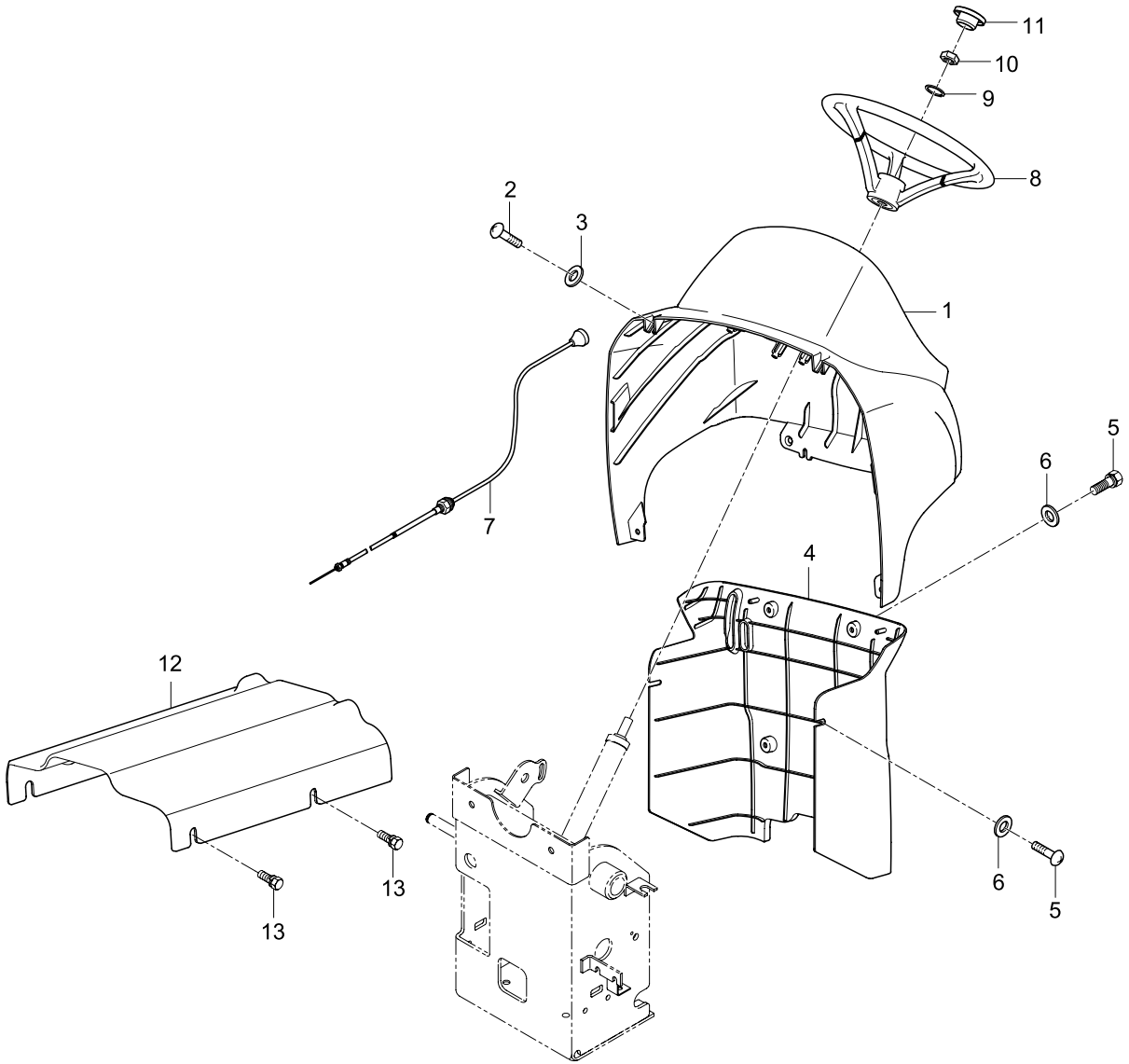

REF. NO	PART. NO	DESCRIPTION	Q'TY								I.C	REMARK
			CK20J-AU	CK20HJ-AU								
01	T2350-55313	COVER, INSTRUMENT (UPPER)	1	1								
01	T2350-55314	COVER, INSTRUMENT (UPPER)	1	1								
01	T2350-55315	COVER, INSTRUMENT (UPPER)	1	1								
02	03004-50616	SCREW	4	4								
02	55571-2128-1	SCREW	4	4								
02	01025-50620	SCREW	4	4								
03	04013-50060	WASHER, PLAIN	4	4								Deleted
			~3050-00173	~3051-00247								
04	T2350-55325	COVER, INSTRUMENT (DOWN)	1									
04	T2350-55326	COVER, INSTRUMENT (DOWN)	1									
04	T2360-55325	COVER, INSTRUMENT (DOWN)		1								
04	T2360-55326	COVER, INSTRUMENT (DOWN)		1								
05	03004-50616	SCREW	6	6								
05	55571-2128-1	SCREW	6	6								
05	01025-50620	SCREW	6	6								
06	04013-50060	WASHER, PLAIN	6	6								Deleted
			~3050-00173	~3051-00247								
07	T2350-55412	WIRE, ENGINE STOP	1	1								
08	T2350-55451	HANDLE ASS'Y	1	1								
08	T2350-55452	HANDLE ASS'Y	1	1								
09	04512-50120	WASHER, SPRING	1	1								
10	02176-50120	NUT	1	1								
11	T2351-55461	CAP, HANDLE	1	1								
11	T2351-55462	CAP, HANDLE	1	1								
12	T2360-55373	COVER, TRANSMISSION		1								
12	T2360-55374	COVER, TRANSMISSION		1								
13	01754-50812	BOLT		4								

T820 FENDER GROUP

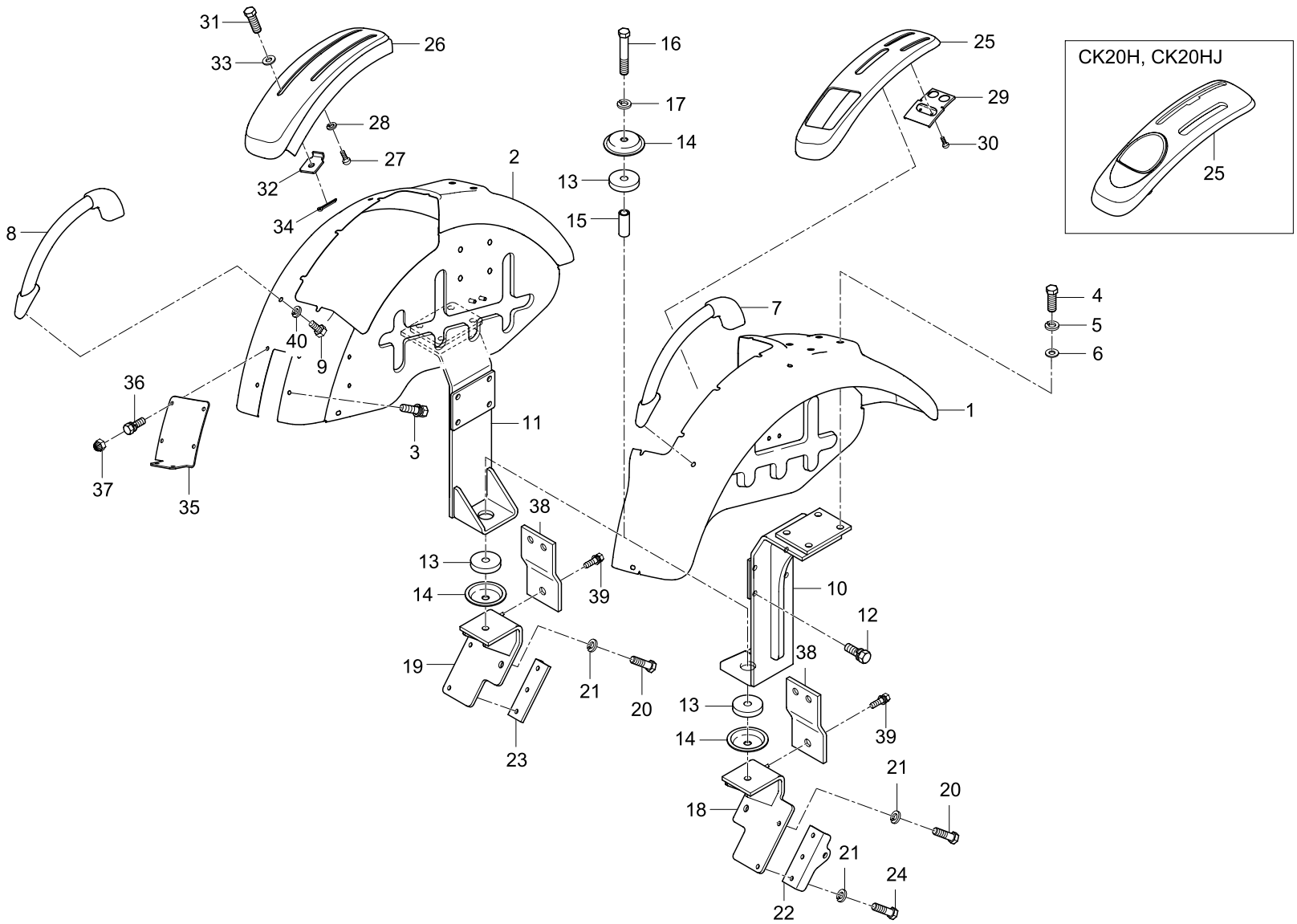

REF. NO	PART. NO	DESCRIPTION	Q'TY								I.C	REMARK
			CK20	CK20J	CK20H	CK20HJ	CK20-EU	CK20J-EU	CK20H-EU	CK20HJ-EU		
01	T2350-95013	FENDER ASS'Y (LH)	1	1	1	1						
01	T2350-95014	FENDER ASS'Y (LH)	1	1	1	1						
01	T2350-95015	FENDER ASS'Y (LH)	1	1	1	1						
01	T2350-95016	FENDER ASS'Y (LH)	1	1	1	1						
02	T2350-95023	FENDER ASS'Y (RH)	1	1	1	1						
02	T2350-95024	FENDER ASS'Y (RH)	1	1	1	1						
02	T2350-95025	FENDER ASS'Y (RH)	1	1	1	1						
02	T2350-95026	FENDER ASS'Y (RH)	1	1	1	1						
03	01125-50816	BOLT	8	7	7	7						
04	01173-51450	BOLT	8	8	8	8						
05	04512-50140	WASHER, SPRING	8	8	8	8						
06	04013-50140	WASHER, PLAIN	2	8	8	8						
07	T2350-95081	GRIP, FENDER (LH)	1	1	1	1						
07	T2350-95082	GRIP, FENDER (LH)	1	1	1	1						
08	T2350-95091	GRIP, FENDER (RH)	1	1	1	1						
08	T2350-95092	GRIP, FENDER (RH)	1	1	1	1						
09	01123-51016	BOLT	4	4	4	4						
09	01133-51016	BOLT	4	4	4	4						
09	76KP-1308-1	BOLT	4	4	4	4						
10	T2350-95312	SUPPORT, FENDER (LH)	1	1	1	1						
10	T2350-95313	SUPPORT, FENDER (LH)	1	1	1	1						
			~3193-00010	~D194-00150	~3195-00120	~D196-00200						
10	T2351-95312	SUPPORT, FENDER (LH)	1	1	1	1						
			E193-00001~	E194-00001~	E195-00001~	E196-00001~						
11	T2350-95322	SUPPORT, FENDER (RH)	1	1	1	1						
11	T2350-95323	SUPPORT, FENDER (RH)	1	1	1	1						
			~3193-00010	~D194-00150	~3195-00120	~D196-00200						
11	T2351-95322	SUPPORT, FENDER (RH)	1	1	1	1						
			E193-00001~	E194-00001~	E195-00001~	E196-00001~						

REF. NO	PART. NO	DESCRIPTION	Q'TY								I.C	REMARK
			CK20	CK20J	CK20H	CK20HJ	CK20-EU	CK20J-EU	CK20H-EU	CK20HJ-EU		
12	01133-51240	BOLT	8	8	8	8						
13	T2670-74431	CUSHION	4	4	4	4						
14	T2350-85151	STOPPER	4	4	4	4						
15	T2350-85171	SPACER	2	2	2	2						
16	01173-51485	BOLT	2	2	2	2						
16	01173-51490	BOLT	2	2	2	2						
17	04512-50140	WASHER, SPRING	2	2	2	2						
18	T2350-85183	BRACKET, CHECK CHANGE (LH)	1	1	1	1						
			~3193-00010	~D194-00150	~3195-00120	~D196-00200						
18	T2351-85181	BRACKET, CHECK CHANGE (LH)	1	1	1	1						
			E193-00001~	E194-00001~	E195-00001~	E196-00001~						
19	T2350-85193	BRACKET, CHECK CHANGE (RH)	1	1	1	1						
			~3193-00010	~D194-00150	~3195-00120	~D196-00200						
19	T2351-85191	BRACKET, CHECK CHANGE (RH)	1	1	1	1						
			E193-00001~	E194-00001~	E195-00001~	E196-00001~						
20	01173-51430	BOLT	1	1	1	1						
20	01173-51430	BOLT	2	2	2	2						
21	04512-50140	WASHER, SPRING	6	6	6	6						
22	T2350-85212	HOLDER, CHECK CHANGE (LH)	1	1	1	1						
23	T2350-85222	HOLDER, CHECK CHANGE (RH)	1	1	1	1						
24	01173-51440	BOLT	4	4	4	4						
25	T2350-95413	GUIDE, LEVER (LH)	1	1								
25	T2350-95414	GUIDE, LEVER (LH)	1	1								
25	T2360-95413	GUIDE, LEVER (LH)			1	1						
25	T2360-95414	GUIDE, LEVER (LH)			1	1						
25	T2360-95415	GUIDE, LEVER (LH)			1	1						
26	T2350-95423	GUIDE, LEVER (RH)	1	1	1	1						
26	T2350-95424	GUIDE, LEVER (RH)	1	1	1	1						
27	38240-1883-1	SCREW	10	10	10	10						

T820 FENDER GROUP

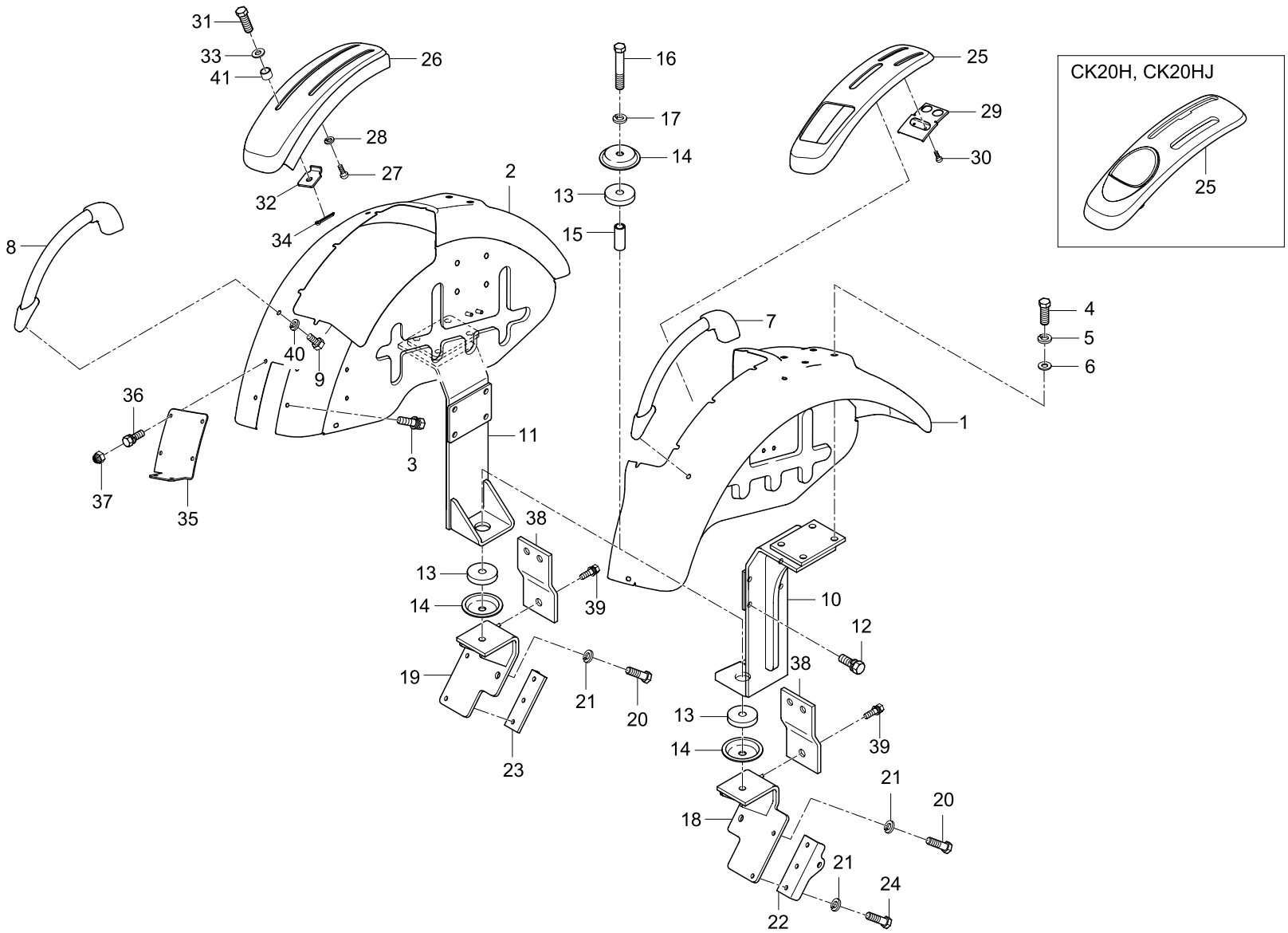

REF. NO	PART. NO	DESCRIPTION	Q'TY								I.C	REMARK
			CK20	CK20J	CK20H	CK20HJ	CK20-EU	CK20J-EU	CK20H-EU	CK20HJ-EU		
28	04512-50040	WASHER, SPRING	10	10	10	10						
29	T2350-95432	PLATE, GUIDE	1	1	1	1						
30	01123-50816	BOLT	2	2	2	2						
31	55571-3238-1	BOLT	1	1	1	1						
32	T2350-95471	STOPPER	1	1	1	1						
32	T2350-95472	STOPPER	1	1	1	1						
33	04015-50060	WASHER, PLAIN	1	1	1	1						
34	05511-50215	PIN, SPLIT	1	1	1	1						
35	T2350-95062	COVER	1		1							
36	01125-50816	BOLT	6		6							
37	T4815-93211	NUT, CAP	4		4							
38	T2351-97211	STOPPER	2	2	2	2						
39	01133-51020	BOLT	4	4	4	4						
40	04512-50100	WASHER, SPRING	10	10	10	10						
41	T4520-83301	SPACER	1	1	1	1						

T825 FENDER GROUP

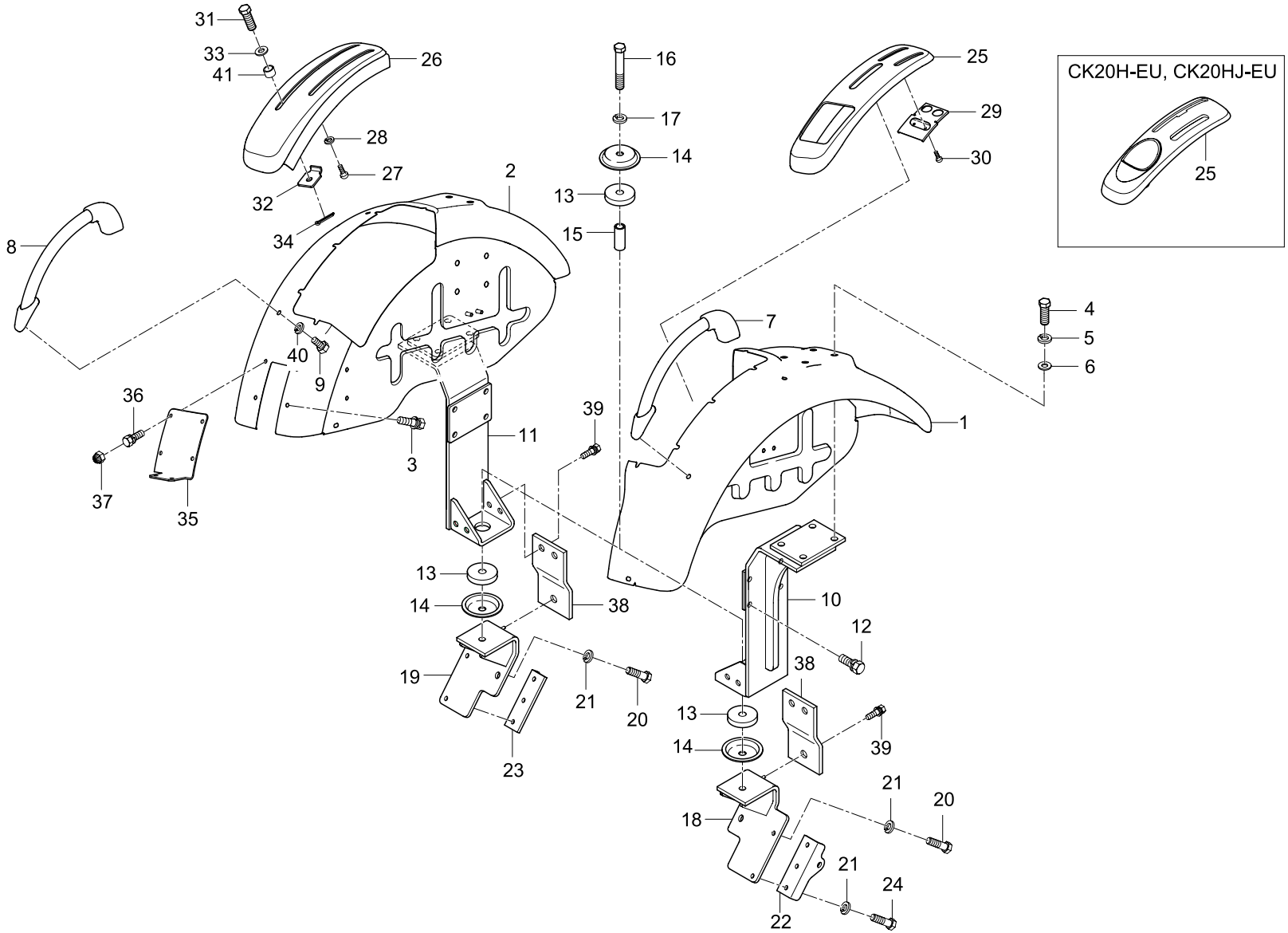

REF. NO	PART. NO	DESCRIPTION	Q'TY								I.C	REMARK
			CK20	CK20J	CK20H	CK20HJ	CK20-EU	CK20J-EU	CK20H-EU	CK20HJ-EU		
01	T2351-95012	FENDER ASS'Y (LH)					1	1	1	1		
01	T2351-95013	FENDER ASS'Y (LH)					1	1	1	1		
01	T2351-95014	FENDER ASS'Y (LH)					1	1	1	1		
02	T2351-95022	FENDER ASS'Y (RH)					1	1	1	1		
02	T2351-95023	FENDER ASS'Y (RH)					1	1	1	1		
02	T2351-95024	FENDER ASS'Y (RH)					1	1	1	1		
03	01125-50816	BOLT					8	7	7	7		
04	01173-51450	BOLT					8	8	8	8		
05	04512-50140	WASHER, SPRING					8	8	8	8		
06	04013-50140	WASHER, PLAIN					2	8	8	8		
07	T2350-95082	GRIP, FENDER (LH)					1	1	1	1		
08	T2350-95092	GRIP, FENDER (RH)					1	1	1	1		
09	01123-51016	BOLT					4	4	4	4		
09	01133-51016	BOLT					4	4	4	4		
09	76KP-1308-1	PLUG, DRAIN					4	4	4	4		
10	T2351-95312	SUPPORT, FENDER (LH)					1	1	1	1		
11	T2351-95322	SUPPORT, FENDER (RH)					1	1	1	1		
12	01133-51240	BOLT					8	8	8	8		
13	T2670-74431	CUSHION					4	4	4	4		
14	T2350-85151	STOPPER					4	4	4	4		
15	T2350-85171	SPACER					2	2	2	2		
16	01173-51485	BOLT					2	2	2	2		
16	01173-51490	BOLT					2	2	2	2		
17	04512-50140	WASHER, SPRING					2	2	2	2		
18	T2351-85181	BRACKET, CHECK CHANGE (LH)					1	1	1	1		

REF. NO	PART. NO	DESCRIPTION	Q'TY								I.C	REMARK
			CK20	CK20J	CK20H	CK20HJ	CK20-EU	CK20J-EU	CK20H-EU	CK20HJ-EU		
19	T2351-85191	BRACKET, CHECK CHANGE (RH)					1	1	1	1		
20	01173-51430	BOLT					1	1	1	1		
20	01173-51430	BOLT					2	2	2	2		
21	04512-50140	WASHER, SPRING					6	6	6	6		
22	T2350-85212	HOLDER, CHECK CHANGE (LH)					1	1	1	1		
23	T2350-85222	HOLDER, CHECK CHANGE (RH)					1	1	1	1		
24	01173-51440	BOLT					4	4	4	4		
25	T2350-95414	GUIDE, LEVER (LH)					1	1				
25	T2360-95414	GUIDE, LEVER (LH)							1	1		
25	T2360-95415	GUIDE, LEVER (LH)							1	1		
26	T2350-95424	GUIDE, LEVER (RH)					1	1	1	1		
27	38240-1883-1	SCREW					10	10	10	10		
28	04512-50040	WASHER, SPRING					10	10	10	10		
29	T2350-95432	PLATE, GUIDE					1	1	1	1		
30	01123-50816	BOLT					2	2	2	2		
31	55571-3238-1	BOLT					1	1	1	1		
32	T2350-95471	STOPPER					1	1	1	1		
32	T2350-95472	STOPPER					1	1	1	1		
33	04015-50060	WASHER, PLAIN					1	1	1	1		
34	05511-50215	PIN, SPLIT					1	1	1	1		
35	T2350-95062	COVER					1		1			
36	01125-50816	BOLT					6		6			
37	T4815-93211	NUT, CAP					4		4			
38	T2351-97211	STOPPER					2	2	2	2		

REF. NO	PART. NO	DESCRIPTION	Q'TY								I.C	REMARK
			CK20	CK20J	CK20H	CK20HJ	CK20-EU	CK20J-EU	CK20H-EU	CK20HJ-EU		
39	01133-51020	BOLT					4	4	4	4		
39	01133-51025	BOLT					4	4	4	4		
40	04512-50100	WASHER, SPRING					4	4	4	4		
41	T4520-83301	SPACER					1	1	1	1		

T830 SEAT FLOOR GROUP

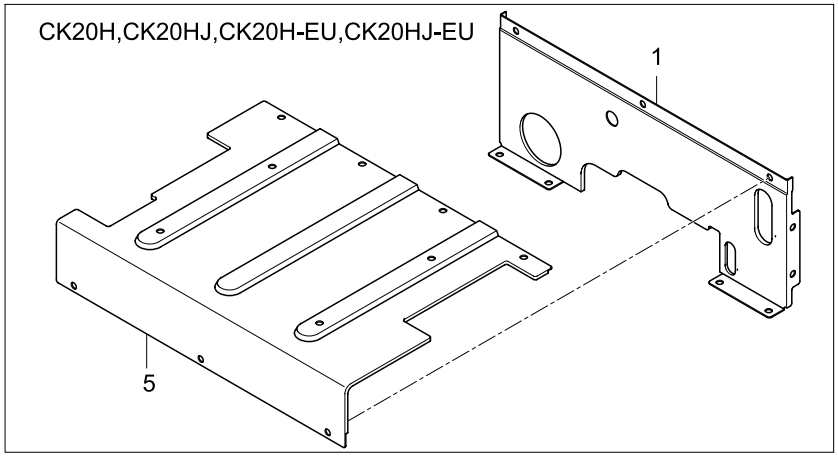

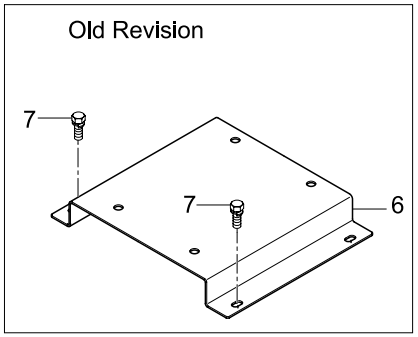

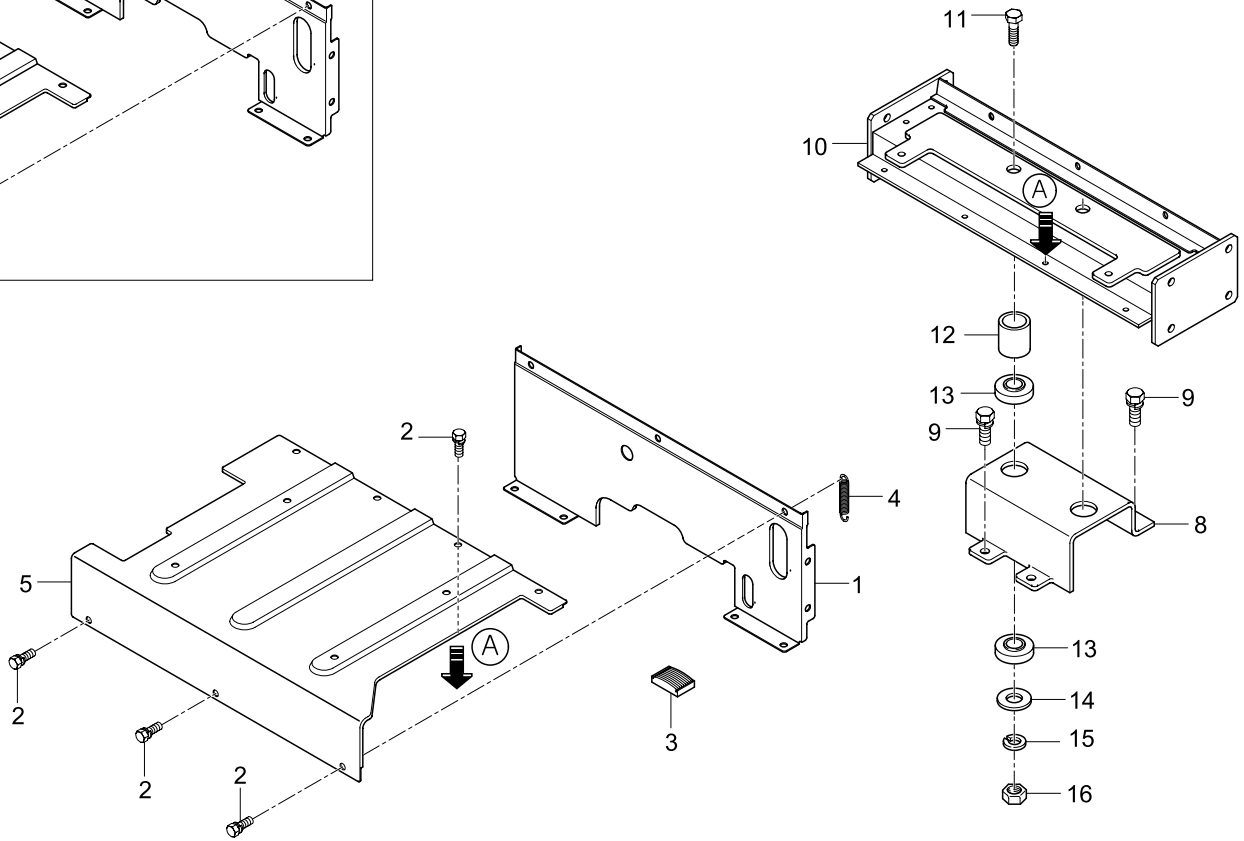

REF. NO	PART. NO	DESCRIPTION	Q'TY								I.C	REMARK
			CK20	CK20J	CK20H	CK20HJ	CK20-EU	CK20J-EU	CK20H-EU	CK20HJ-EU		
01	T2350-70412	COVER, FRONT	1	1			1	1				
01	T2360-70412	COVER, FRONT			1	1			1	1		
02	01125-50816	BOLT	7	7	7	7	7	7	7	7		
03	T2350-26661	RUBBER, HST PEDAL	1	1	1	1	1	1	1	1		
04	T4520-62331	SPRING, HOLDER	1	1	1	1	1	1	1	1		
05	T2350-70432	COVER, UPPER	1	1			1	1				
05	T2360-70431	COVER, UPPER			1	1			1	1		
06	T2350-70481	SUPPORT, SEAT	1	1	1	1						Deleted
			~3193-00010	~3194-00320	~3195-00120	~D196-00200						
07	01125-50820	BOLT	4	4	4	4						Deleted
			~3193-00010	~3194-00320	~3195-00120	~D196-00200						
08	T2350-95221	SUPPORT	1	1	1	1	1	1	1	1		
09	01133-51016	BOLT	4	4	4	4	4	4	4	4		
09	01133-51020	BOLT	4	4	4	4	4	4	4	4		
10	T2350-95213	SUPPORT, FENDER	1	1	1	1	1	1	1	1		
11	T2350-95242	BOLT	2	2	2	2	2	2	2	2		
12	T2350-95231	COLLAR	2	2	2	2	2	2	2	2		
13	T2350-95251	CUSHION	4	4	4	4	4	4	4	4		
14	T2350-95261	SPACER	2	2	2	2	2	2	2	2		
15	04512-50160	WASHER, SPRING	2	2	2	2	2	2	2	2		
16	02176-50160	NUT	2	2	2	2	2	2	2	2		

T831 SEAT FLOOR GROUP

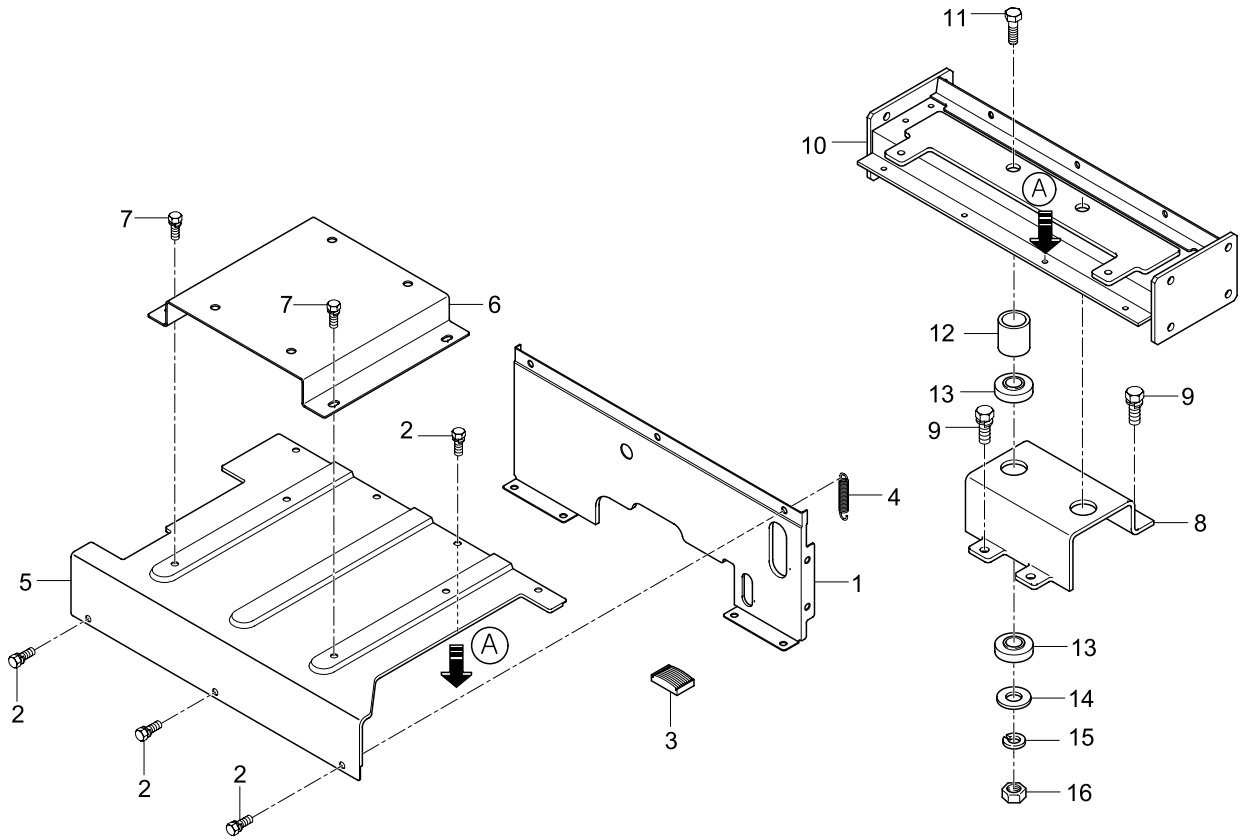

REF. NO	PART. NO	DESCRIPTION	Q'TY								I.C	REMARK
			CK20J-AU									
01	T2350-70412	COVER, FRONT	1									
02	01125-50816	BOLT	7									
03	T2350-26661	RUBBER, HST PEDAL	1									
04	T4520-62331	SPRING, HOLDER	1									
05	T2350-70432	COVER, UPPER	1									
06	T2350-70481	SUPPORT, SEAT	1									
07	01125-50820	BOLT	4									
08	T2350-95221	SUPPORT	1									
09	01133-51016	BOLT	4									
09	01133-51020	BOLT	4									
10	T2350-95213	SUPPORT, FENDER	1									
11	T2350-95242	BOLT	2									
12	T2350-95231	COLLAR	2									
13	T2350-95251	CUSHION	4									
14	T2350-95261	SPACER	2									
15	04512-50160	WASHER, SPRING	2									
16	02176-50160	NUT	2									

T840 STEP GROUP

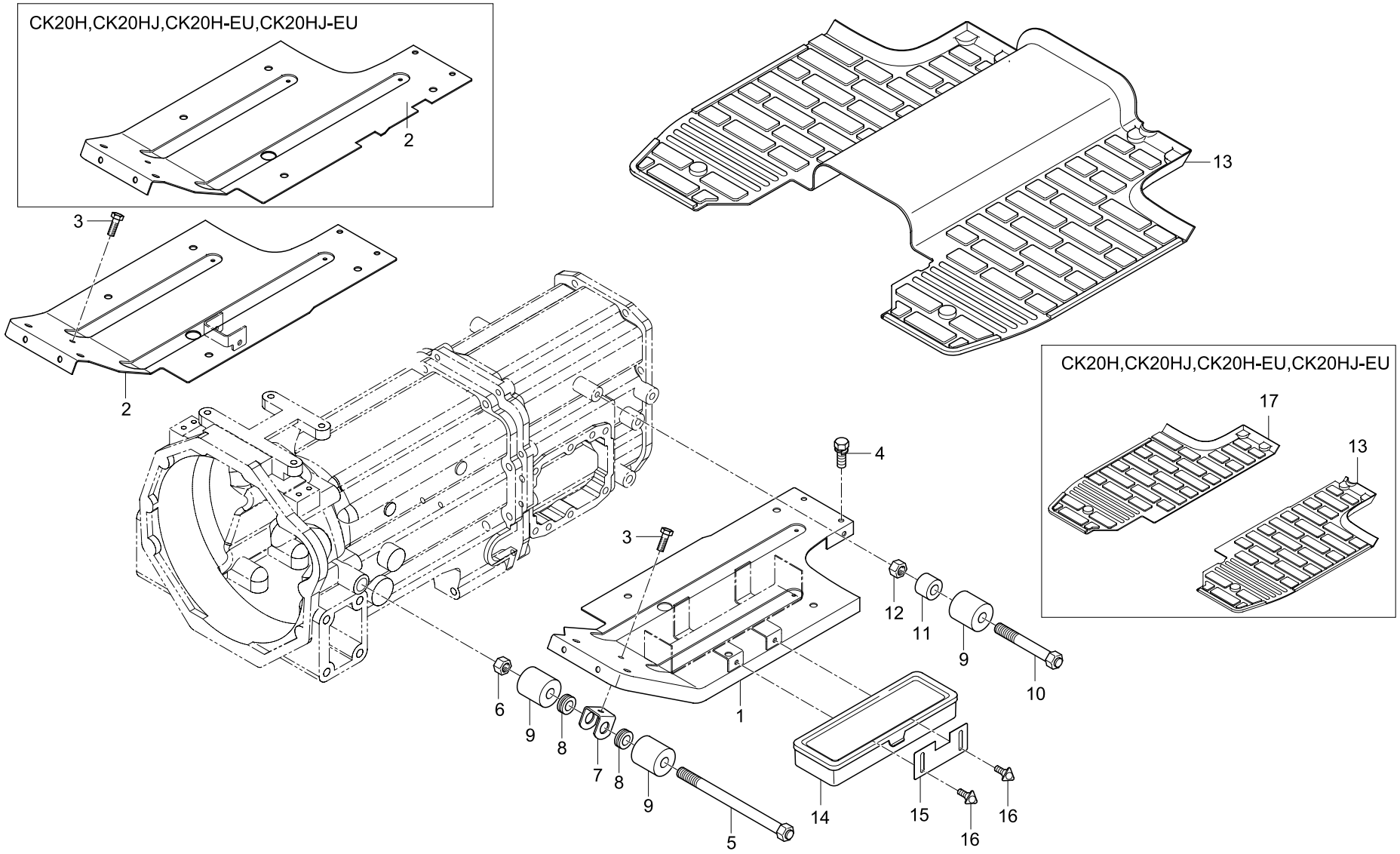

REF. NO	PART. NO	DESCRIPTION	Q'TY								I.C	REMARK
			CK20	CK20J	CK20H	CK20HJ	CK20-EU	CK20J-EU	CK20H-EU	CK20HJ-EU		
01	T2350-70112	STEP (LH)	1	1	1	1	1	1	1	1		
02	T2350-70122	STEP (RH)	1	1			1	1				
02	T2360-70122	STEP (RH)			1	1			1	1		
03	01754-50812	BOLT, FLANGE	2	2	2	2	2	2	2	2		
04	01125-50816	BOLT	4	4	4	4	4	4	4	4		
05	T2350-70151	BOLT (FRONT)	2	2	2	2	2	2	2	2		
05	T2350-70152	BOLT (FRONT)	2	2	2	2	2	2	2	2		
06	02176-50160	NUT	2	2	2	2	2	2	2	2		
07	T2350-70161	BRACKET	2	2	2	2	2	2	2	2		
08	T2350-70171	GROMMET (STEP)	4	4	4	4	4	4	4	4		
09	T2350-70181	CUSHION (STEP)	6	6	6	6	6	6	6	6		
10	T2350-70191	BOLT (REAR)	2	2			2	2				
10	T2350-70192	BOLT (REAR)	2	2			2	2				
10	T2360-70191	BOLT (REAR)			2	2			2	2		
10	T2360-70192	BOLT (REAR)			2	2			2	2		
11	T2350-70201	SPACER	2	2			2	2				
12	02176-50160	NUT	2	2	2	2	2	2	2	2		
13	T2350-70232	MAT, STEP	1	1			1	1				
13	T2360-70232	MAT, STEP(LH)			1	1			1	1		
14	T2350-70491	BOX, TOOL	1	1	1	1	1	1	1	1		
14	T2350-70492	BOX, TOOL	1	1	1	1	1	1	1	1		
15	T2350-70141	PLATE, HOLDER	1	1	1	1	1	1	1	1		
16	P4410-98251	BOLT, GRIP	2	2	2	2	2	2	2	2		
17	T2360-70241	MAT, STEP (RH)			1	1			1	1		

T850 SEAT GROUP

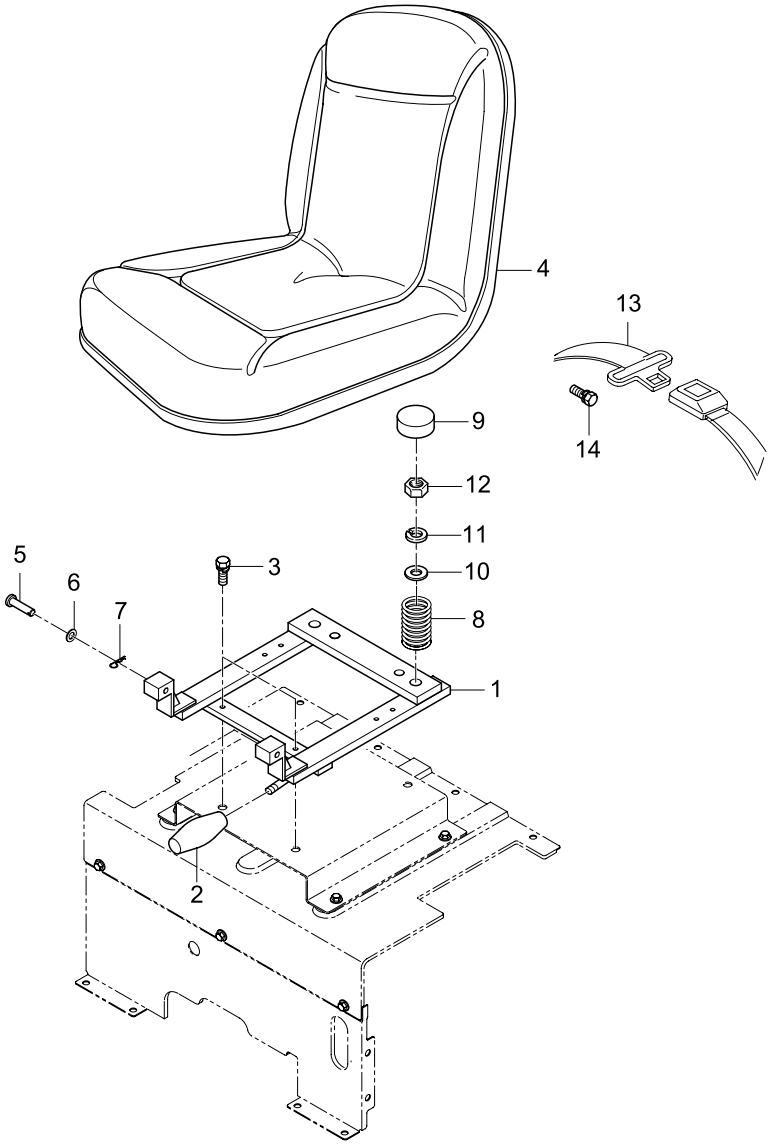

REF. NO	PART. NO	DESCRIPTION	Q'TY								I.C	REMARK
			CK20	CK20J	CK20H	CK20HJ	CK20J-AU	CK20HJ-AU				
01	T2350-18402	SEAT SUPPORT ASS'Y	1	1	1	1	1	1				
01	T2350-18403	SEAT SUPPORT ASS'Y	1	1	1	1	1	1				
			~3193-00010	~D194-00150	~3195-00120	~D196-00200						
02	76KP-1737-1	GRIP	1	1	1	1	1	1				
			~3193-00010	~D194-00150	~3195-00120	~D196-00200						
03	01133-51016	BOLT	4	4	4	4	4	4				
			~3193-00010	~D194-00150	~3195-00120	~D196-00200						
04	T2350-19501	SEAT ASS'Y	1	1	1	1	1	1				
			~3193-00010	~D194-00150	~3195-00120	~D196-00200						
05	05122-51055	PIN, JOINT	2	2	2	2	2	2				
			~3193-00010	~D194-00150	~3195-00120	~D196-00200						
06	04013-50100	WASHER, PLAIN	2	2	2	2	2	2				
			~3193-00010	~D194-00150	~3195-00120	~D196-00200						
07	05515-51000	PIN, SNAP	2	2	2	2	2	2				
			~3193-00010	~D194-00150	~3195-00120	~D196-00200						
08	84612-1851-0	SPRING	2	2	2	2	2	2				
			~3193-00010	~D194-00150	~3195-00120	~D196-00200						
09	76591-4155-1	CUSHION	2	2	2	2	2	2				
			~3193-00010	~D194-00150	~3195-00120	~D196-00200						
10	04013-50080	WASHER, PLAIN	2	2	2	2	2	2				
			~3193-00010	~D194-00150	~3195-00120	~D196-00200						
11	04512-50080	WASHER, SPRING	2	2	2	2	2	2				
			~3193-00010	~D194-00150	~3195-00120	~D196-00200						
12	02114-50080	NUT	2	2	2	2	2	2				
			~3193-00010	~D194-00150	~3195-00120	~D196-00200						
13	T4815-85003018	BELT, SEAT					1	1				
14	01133-51025	BOLT					2	2				

T850A SEAT GROUP

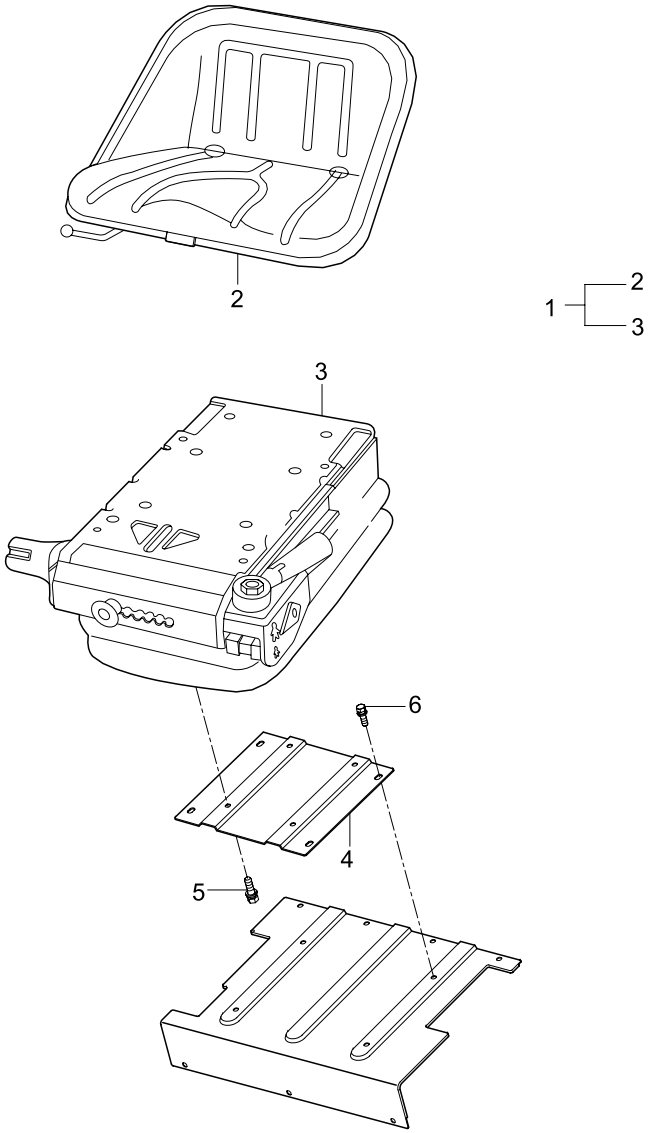

REF. NO	PART. NO	DESCRIPTION	Q'TY								I.C	REMARK
			CK20	CK20J	CK20H	CK20HJ						
01	T2351-19501	SEAT ASS'Y	1	1	1	1						KAB/SEATING 184930
02	92310	SEAT	1	1	1	1						KAB/SEATING
03	157791	SUSPENSION, SEAT	1	1	1	1						KAB/SEATING
04	T2351-70441	SUPPORT, SEAT	1	1	1	1						
05	01123-50820	BOLT	4	4	4	4						
06	01125-50820	BOLT	4	4	4	4						

T855 SEAT GROUP

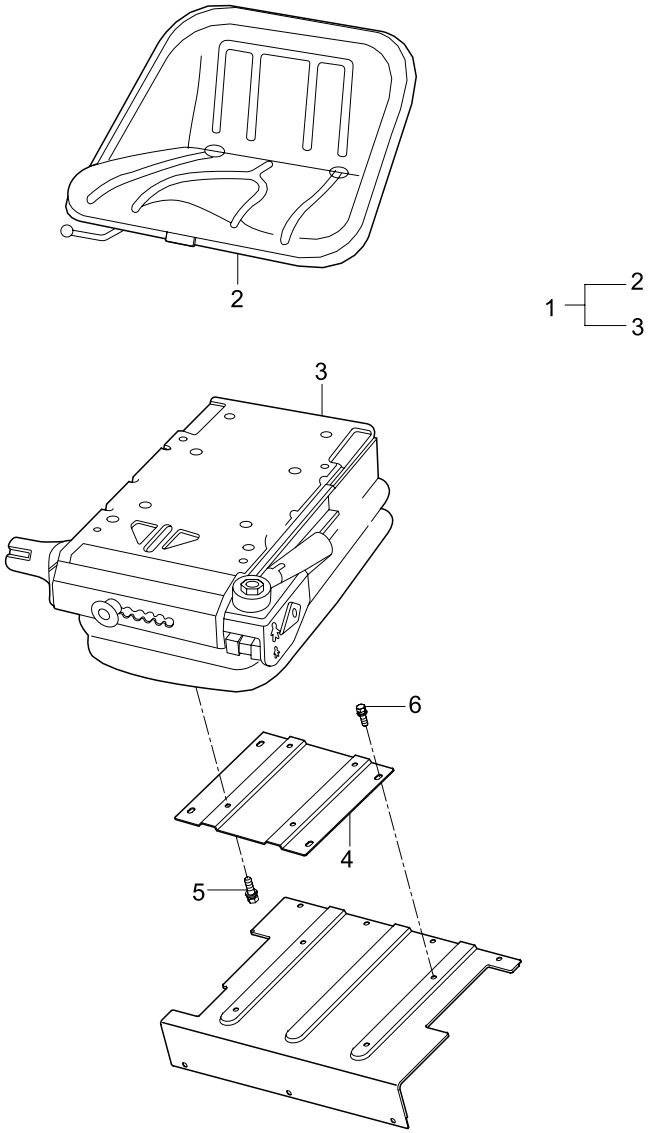

REF. NO	PART. NO	DESCRIPTION	Q'TY								I.C	REMARK
			CK20-EU	CK20-NL	CK20J-NL	CK20J-IT	CK20J-EN	CK20-SP	CK20J-SP	CK20J-FR		
01	T2351-19501	SEAT ASS'Y	1	1	1	1	1	1	1	1		KAB/SEATING 184930
02	92310	SEAT	1	1	1	1	1	1	1	1		KAB/SEATING
03	157791	SUSPENSION, SEAT	1	1	1	1	1	1	1	1		KAB/SEATING
04	T2351-70441	SUPPORT, SEAT	1	1	1	1	1	1	1	1		
05	01123-50820	BOLT	4	4	4	4	4	4	4	4		
06	01125-50820	BOLT	4	4	4	4	4	4	4	4		

T856 SEAT GROUP

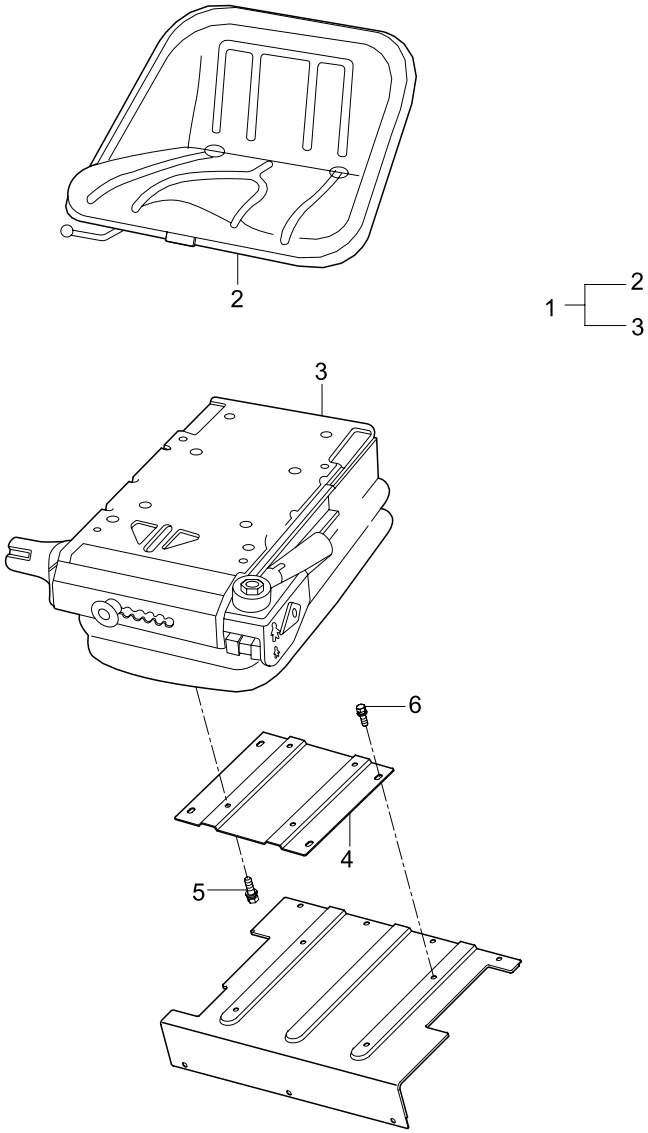

REF. NO	PART. NO	DESCRIPTION	Q'TY								I.C	REMARK
			CK20H-EU	CK20H-NL	CK20HJ-NL	CK20HJ-IT	CK20HJ-EN	CK20H-SP	CK20HJ-SP	CK20HJ-FR		
01	T2351-19501	SEAT ASS'Y	1	1	1	1	1	1	1	1		KAB/SEATING 184930
02	92310	SEAT	1	1	1	1	1	1	1	1		KAB/SEATING
03	157791	SUSPENSION, SEAT	1	1	1	1	1	1	1	1		KAB/SEATING
04	T2351-70441	SUPPORT, SEAT	1	1	1	1	1	1	1	1		
05	01123-50820	BOLT	4	4	4	4	4	4	4	4		
06	01125-50820	BOLT	4	4	4	4	4	4	4	4		

T860 BATTERY GROUP

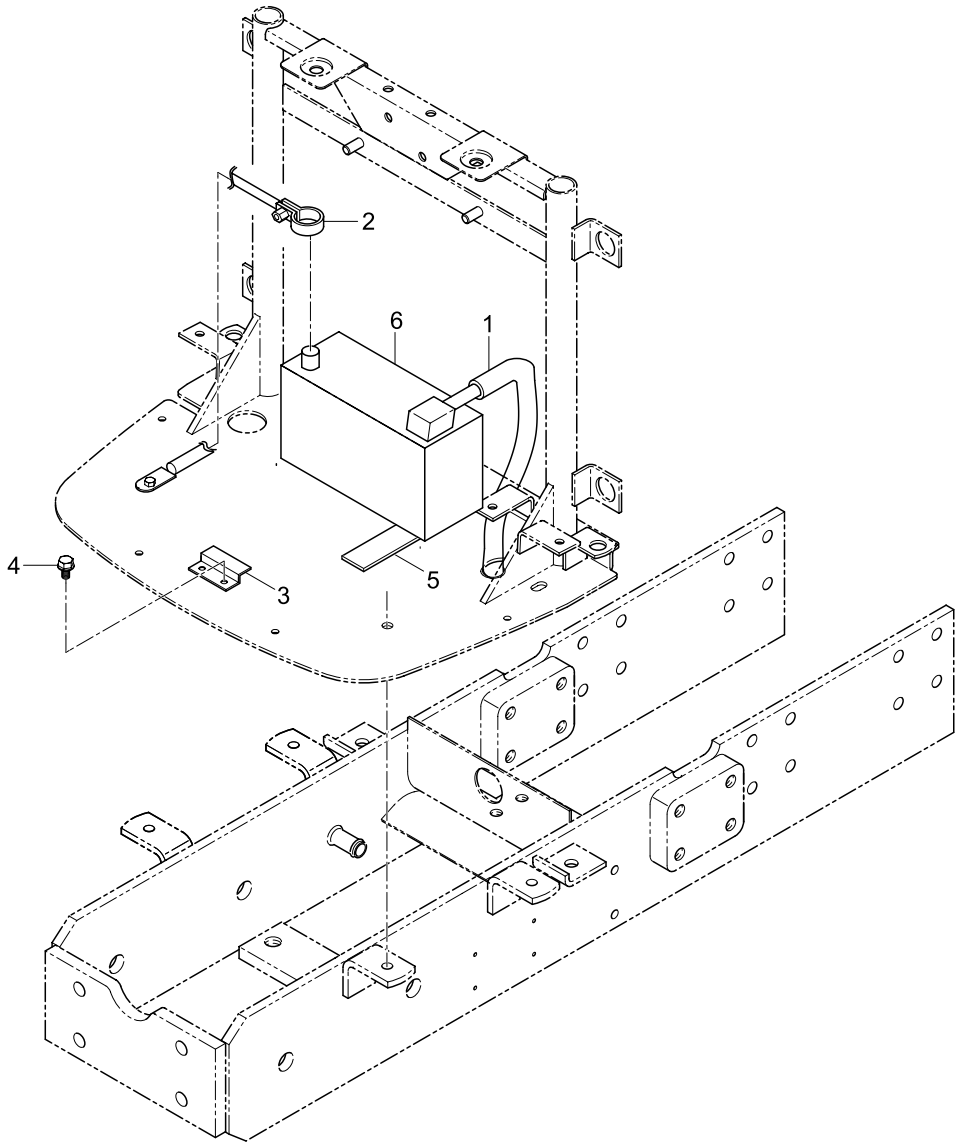

REF. NO	PART. NO	DESCRIPTION	Q'TY								I.C	REMARK
			CK20	CK20J	CK20H	CK20HJ	CK20-EU	CK20J-EU	CK20H-EU	CK20HJ-EU		
01	T2350-69011	CORD, BATTERY (+)	1	1	1	1	1	1	1	1		
02	T2350-69021	CORD, BATTERY (-)	1	1	1	1	1	1	1	1		
03	T2350-50251	BRACKET, BATTERY	2	2	2	2	2	2	2	2		
03	T2350-50252	BRACKET, BATTERY	2	2	2	2	2	2	2	2		
04	01123-50816	BOLT	2	2	2	2	2	2	2	2		
04	01754-50816	BOLT, FLANGE	2	2	2	2	2	2	2	2		
05	T2610-50271	RUBBER, CUSHION	2	2	2	2	2	2	2	2		
06	T4810-69042	BATTERY					1	1	1	1		
06	T4810-69044	BATTERY					1	1	1	1		

T870 ELECTRICAL SYSTEM 1 GROUP

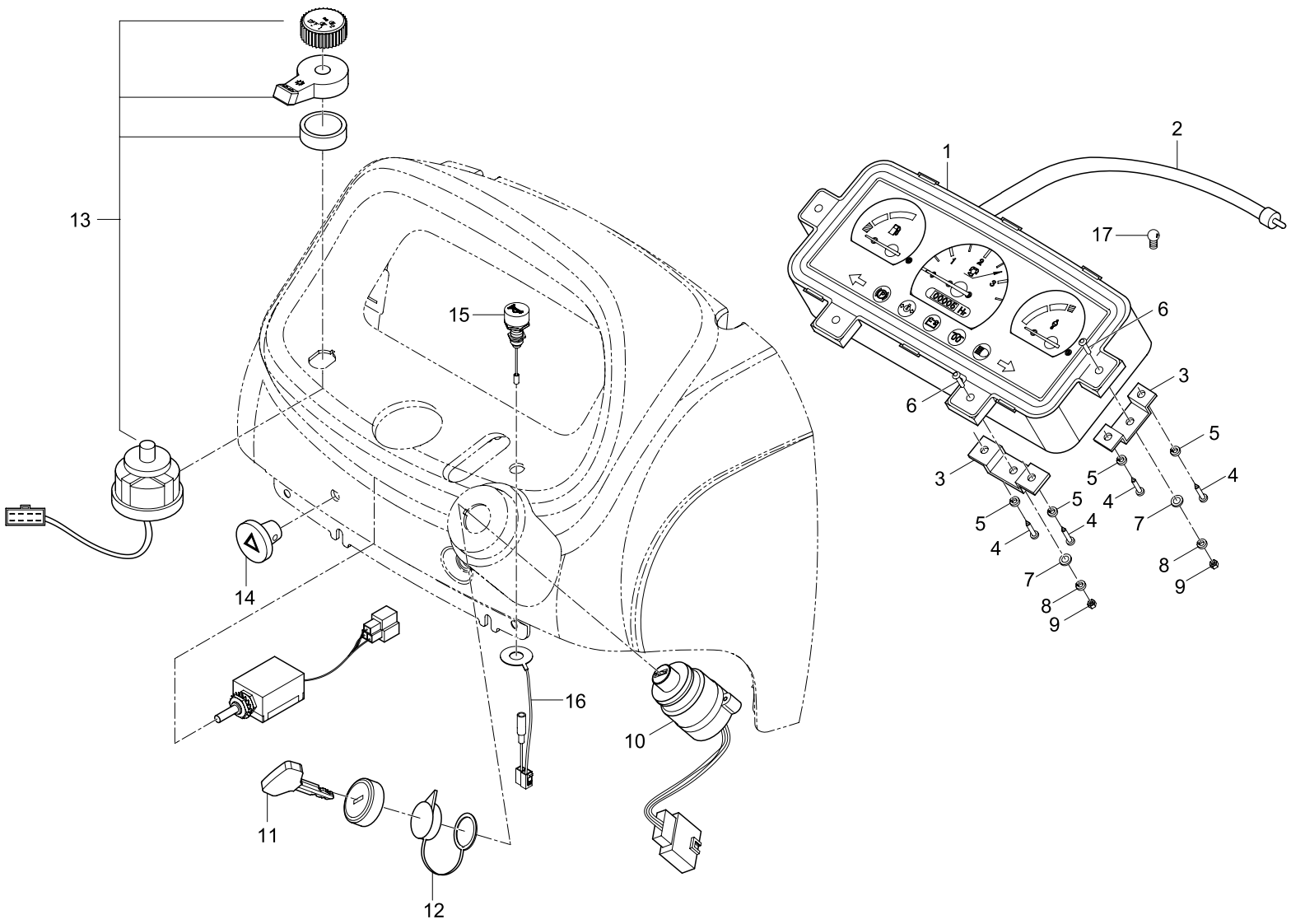

REF. NO	PART. NO	DESCRIPTION	Q'TY								I.C	REMARK
			CK20	CK20J	CK20H	CK20HJ	CK20-EU	CK20J-EU	CK20H-EU	CK20HJ-EU		
01	T2350-69102	COMBINATION METER ASS'Y	1	1	1	1	1	1	1	1		
01	T2350-69103	COMBINATION METER ASS'Y	1	1	1	1	1	1	1	1		
02	T2350-69111	CABLE, TRACTOR METER	1	1	1	1	1	1	1	1		
03	T2350-55421	HOLDER 1, COMBINATION METER	4	4	4	4	4	4	4	4		
04	38240-1883-1	SCREW	8	8	8	8	8	8	8	8		
05	04512-50040	WASHER, SPRING	8	8	8	8	8	8	8	8		
06	03057-50516	SCREW	4	4	4	4	4	4	4	4		
07	04012-50050	WASHER, PLAIN	4	4	4	4	4	4	4	4		
08	04512-50050	WASHER, SPRING	4	4	4	4	4	4	4	4		
09	02054-50050	NUT	4	4	4	4	4	4	4	4		
10	T4520-75174	STARTER SWITCH ASS'Y	1	1	1	1	1	1	1	1		
11	T4625-75191	KEY	2	2	2	2	2	2	2	2		
12	T4837-77772	COVER, STARTER SWITCH WATERP ROOF	1	1	1	1	1	1	1	1		
13	T4620-69024	COMBINATION SWITCH ASS'Y	1	1	1	1	1	1	1	1		
14	T4520-76552	HAZARD SWITCH ASS'Y	1	1	1	1	1	1	1	1		
14	T4520-76553	HAZARD SWITCH ASS'Y	1	1	1	1	1	1	1	1		
15	38240-3241-1	HORN SWITCH ASS'Y					1	1	1	1		
16	52320-4142-2	HARNESS, HORN WIRE					1	1	1	1		
17	T2350-69121	BULB (12V 3.4W)	9	9	9	9	9	9	9	9		

T875 ELECTRICAL SYSTEM 1 GROUP

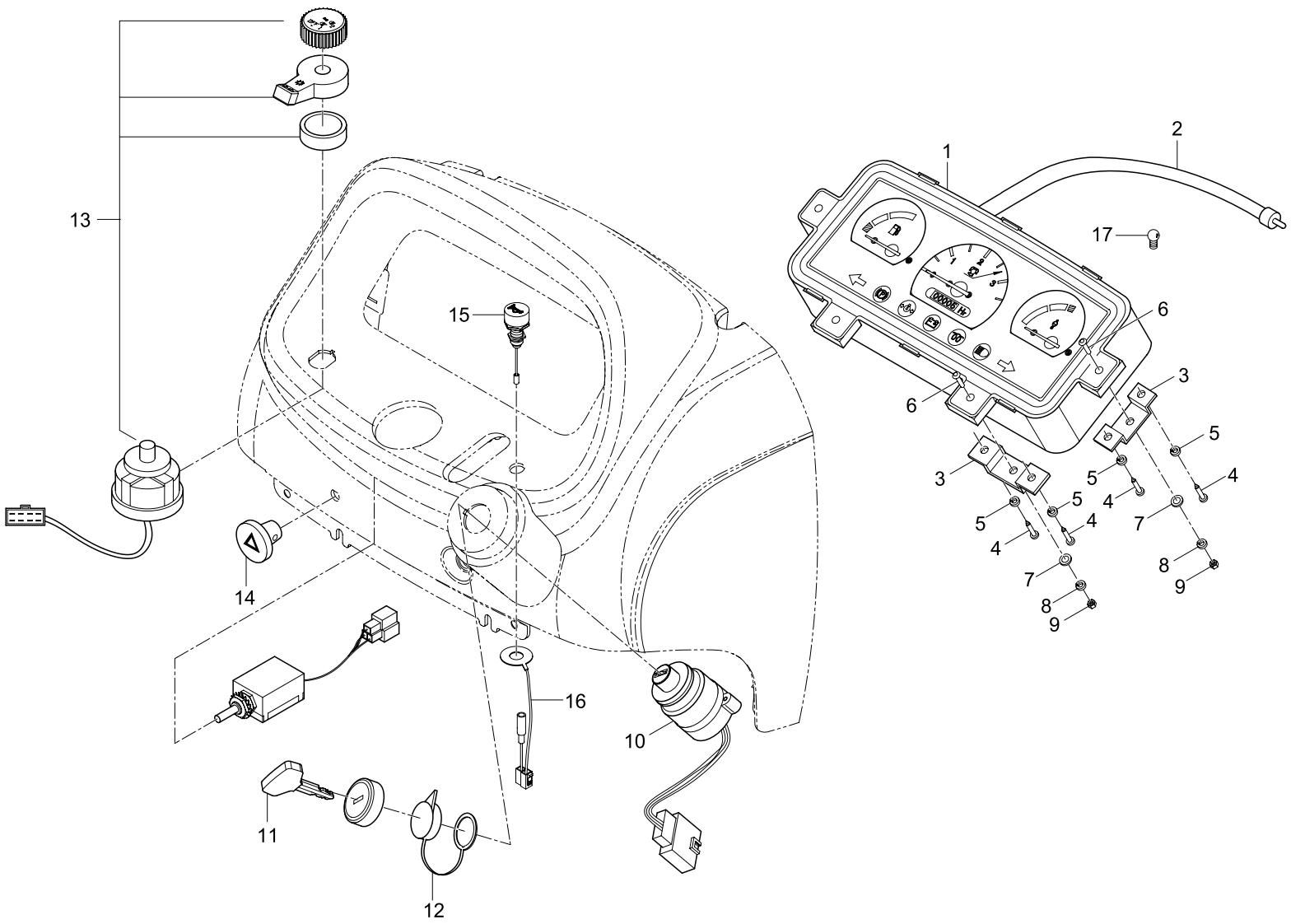

REF. NO	PART. NO	DESCRIPTION	Q'TY								I.C	REMARK
			CK20J-AU	CK20HJ-AU								
01	T2350-69102	COMBINATION METER ASS'Y	1	1								
01	T2350-69103	COMBINATION METER ASS'Y	1	1								
02	T2350-69111	CABLE, TRACTOR METER	1	1								
03	T2350-55421	HOLDER 1, COMBINATION METER	4	4								
04	38240-1883-1	SCREW	8	8								
05	04512-50040	WASHER, SPRING	8	8								
06	03057-50516	SCREW	4	4								
07	04012-50050	WASHER, PLAIN	4	4								
08	04512-50050	WASHER, SPRING	4	4								
09	02054-50050	NUT	4	4								
10	T4520-75174	STARTER SWITCH ASS'Y	1	1								
11	T4620-75191	KEY	2	2								
12	T4837-77772	COVER, STARTER SWITCH WATERP ROOF	1	1								
13	T4620-69024	COMBINATION SWITCH ASS'Y	1	1								
14	T4520-76552	HAZARD SWITCH ASS'Y	1	1								
14	T4520-76553	HAZARD SWITCH ASS'Y	1	1								
15	38240-3241-1	HORN SWITCH ASS'Y	1	1								
16	52320-4142-2	HARNESS, HORN WIRE	1	1								
17	T2350-69121	BULB (12V 3.4W)	9	9								

T880 ELECTRICAL SYSTEM 2 GROUP

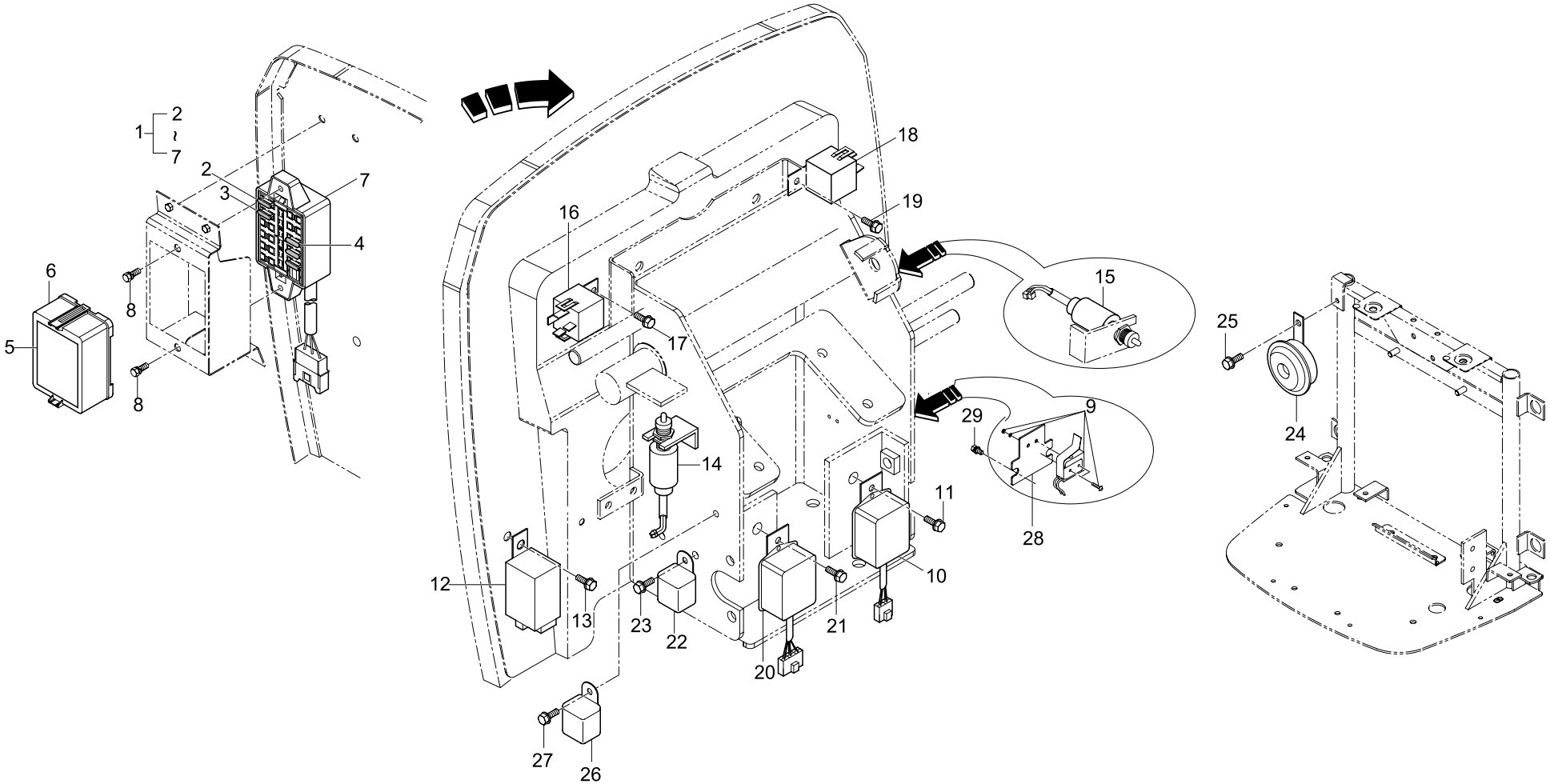

REF. NO	PART. NO	DESCRIPTION	Q'TY								I.C	REMARK
			CK20	CK20J	CK20H	CK20HJ	CK20-EU	CK20J-EU	CK20H-EU	CK20HJ-EU		
01	T2350-69902	FUSE BOX ASS'Y	1	1	1	1	1	1	1	1		
01	T2350-69903	FUSE BOX ASS'Y	1	1	1	1	1	1	1	1		
02	T4260-33631	FUSE (10A)	3	3	3	3	3	3	3	3		
03	35820-7556-1	FUSE (15A)	3	3	3	3	3	3	3	3		
04	36919-5665-0	FUSE (20A)	4	4	4	4	4	4	4	4		
05	T2350-69982	LABEL	1	1	1	1	1	1	1	1		
05	T2350-69983	LABEL	1	1	1	1	1	1	1	1		
06	52300-4166-4	COVER	1	1	1	1	1	1	1	1		
07	52300-4168-1	PLATE, FUSE	1	1	1	1	1	1	1	1		
08	01023-50620	BOLT	2	2	2	2	2	2	2	2		
09	44512-6881-3	SWITCH, MICRO	1	1	1	1	1	1	1	1		
							~D050-00080	~D050-00080				
10	15475-6024-2	RELAY, TIMER	1	1	1	1	1	1	1	1		
11	01123-50612	BOLT	1	1	1	1	1	1	1	1		
12	T4240-31052	UNIT, FLASHER	1	1	1	1	1	1	1	1		
13	01754-50616	BOLT, FLANGE	1	1	1	1	1	1	1	1		
14	T4520-75481	SWITCH, SAFETY START	1	1	1	1	1	1	1	1		
15	T4520-41821	SWITCH, STOP	1	1	1	1	1	1	1	1		
16	C5510-43101	RELAY, PREHEAT	1	1	1	1	1	1	1	1		
17	01754-50616	BOLT, FLANGE	1	1	1	1	1	1	1	1		
18	C5510-43101	RELAY, STARTER	1	1	1	1	1	1	1	1		
19	01754-50616	BOLT, FLANGE	1	1	1	1	1	1	1	1		
20	T2305-60233	CONTROLLER, PREHEAT	1	1	1	1	1	1	1	1		
20	T2305-60234	TIMER, GLOW PLUG	1	1	1	1	1	1	1	1		
21	01123-50612	BOLT, FLANGE	1	1	1	1	1	1	1	1		
22	T4620-69041	RELAY, 5P (BRAKE)	1	1	1	1	1	1	1	1		

REF. NO	PART. NO	DESCRIPTION	Q'TY								I.C	REMARK
			CK20	CK20J	CK20H	CK20HJ	CK20-EU	CK20J-EU	CK20H-EU	CK20HJ-EU		
23	01754-50616	BOLT, FLANGE	1	1	1	1	1	1	1	1		
24	T2611-75951	HORN ASS'Y					1	1	1	1		
25	01025-50614	BOLT					2	2	2	2		
26	T4620-69041	RELAY, 5P	1	1	1	1	1	1	1	1		
27	01754-50616	BOLT, FLANGE	1	1	1	1	1	1	1	1		
28	T2350-55291	PLATE, SENSOR	1	1	1	1			1	1		
29	01023-50612	BOLT	2	2	2	2			2	2		

T890 ELECTRICAL SYSTEM 3 GROUP

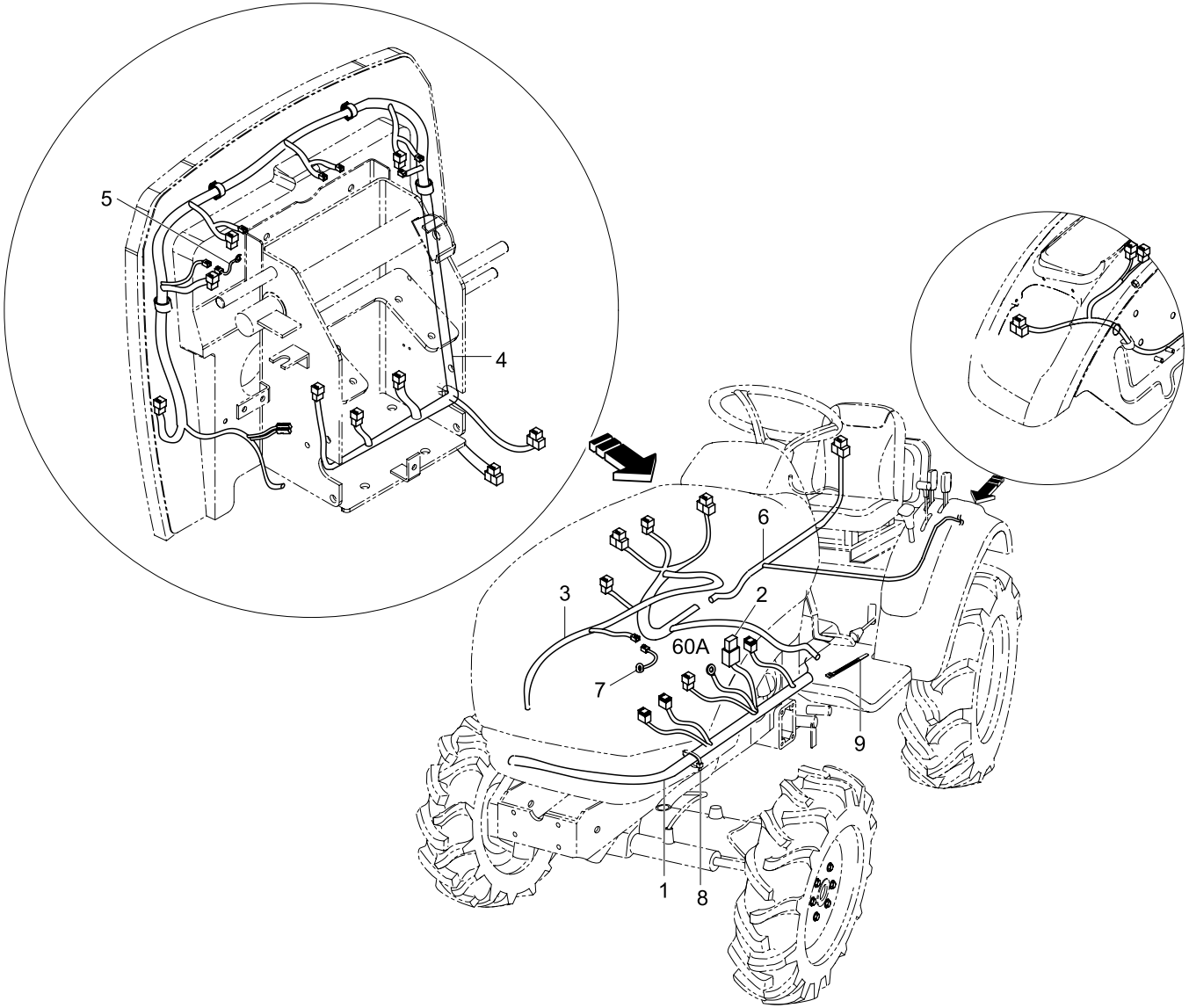

REF. NO	PART. NO	DESCRIPTION	Q'TY								I.C	REMARK
			CK20	CK20J	CK20H	CK20HJ	CK20-EU	CK20J-EU	CK20H-EU	CK20HJ-EU		
01	T2350-69382	HARNESS 1, BONNET WIRE	1	1	1	1	1	1	1	1		
01	T2350-69383	HARNESS 1, BONNET WIRE	1	1	1	1	1	1	1	1		
02	52794-4242-1	FUSE (60A)	1	1	1	1	1	1	1	1		
03	T2350-69392	HARNESS 2, BONNET WIRE	1	1	1	1	1	1	1	1		
03	T2350-69393	HARNESS 2, BONNET WIRE	1	1	1	1	1	1	1	1		
04	T2350-69423	HARNESS, PANEL WIRE	1	1	1	1	1	1	1	1		
04	T2350-69424	HARNESS, PANEL WIRE	1	1	1	1	1	1	1	1		
04	T2350-69425	HARNESS, PANEL WIRE	1	1	1	1	1	1	1	1		
05	T2350-69451	HARNESS, WIRE	1	1	1	1	1	1	1	1		
06	T2350-69443	HARNESS, FENDER WIRE	1	1	1	1						
06	T2351-69442	HARNESS, FENDER WIRE					1	1	1	1		
06	T2351-69443	HARNESS, FENDER WIRE					1	1	1	1		
07	59460-4155-1	HARNESS 5, WIRE	1	1	1	1	1	1	1	1		
08	T4520-82561	BAND, CORD	5	5	5	5	5	5	5	5		
09	T4520-82551	BAND, CORD	5	5	5	5	5	5	5	5		

T900 LIGHT GROUP

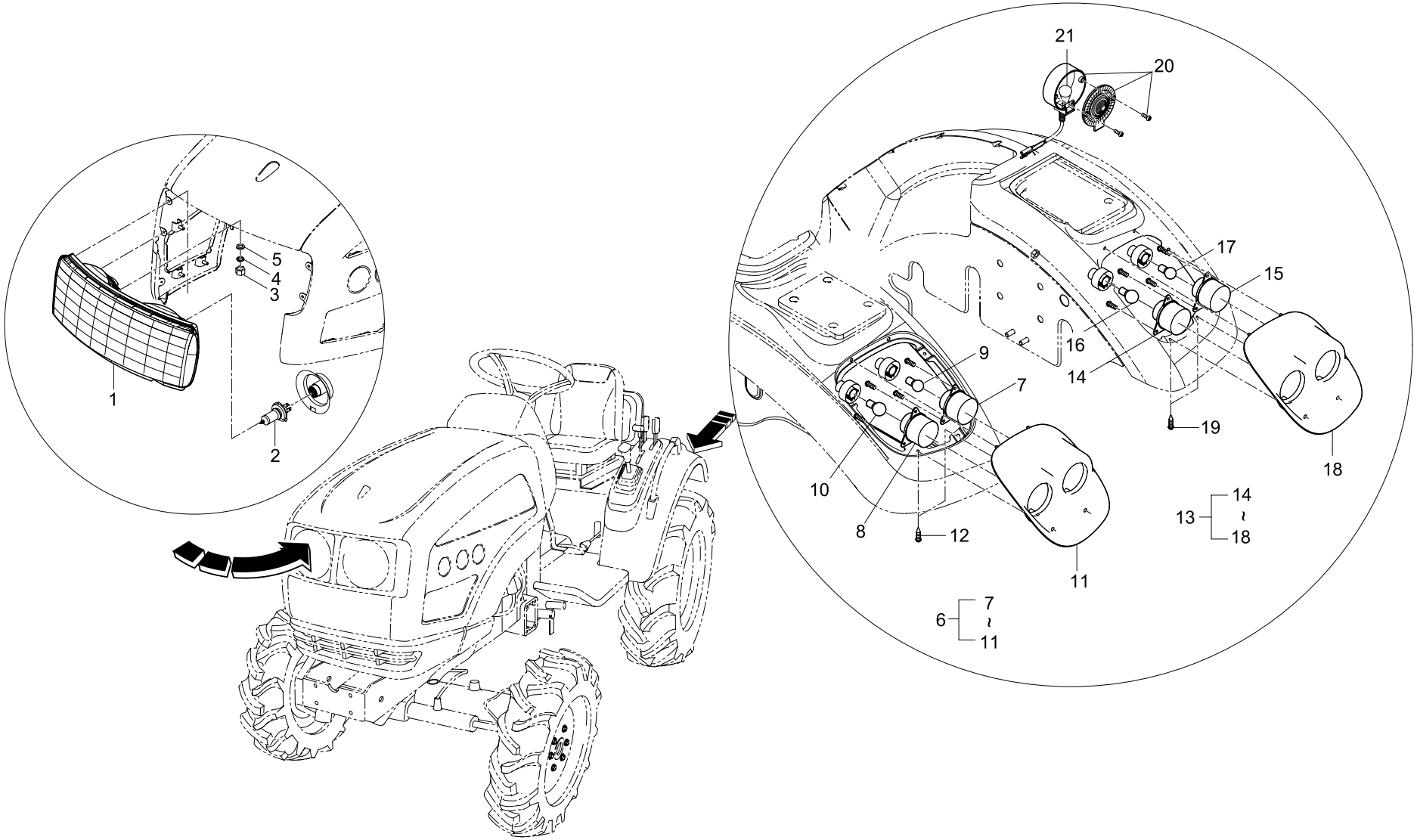

REF. NO	PART. NO	DESCRIPTION	Q'TY								I.C	REMARK
			CK20	CK20J	CK20H	CK20HJ	CK20-EU	CK20J-EU	CK20H-EU	CK20HJ-EU		
01	T2350-69511	HEAD LAMP ASS'Y	1	1	1	1						
02	T4620-69241	BULB (12V 35/35W)	2	2	2	2						
03	02054-50040	NUT	5	5	5	5						
04	04512-50040	WASHER, SPRING	5	5	5	5						
05	04012-50040	WASHER, PLAIN	5	5	5	5						
06	T2350-69614	LAMP, REAR COMBI (LH)	1	1	1	1						
07	T2305-69651	LAMP, STOP	1	1	1	1						
08	T2305-69661	LAMP, REAR TAIL	1	1	1	1						
09	T2611-79011	BULB (12V 21W)	1	1	1	1						
10	T2611-79031	BULB (12V 5W)	1	1	1	1						
11	T2350-95114	COVER, REAR LAMP	1	1	1	1						
12	38240-1883-1	SCREW	2	2	2	2						
13	T2350-69624	LAMP, REAR COMBI (RH)	1	1	1	1						
14	T2305-69651	LAMP, STOP	1	1	1	1						
15	T2305-69661	LAMP, REAR TAIL	1	1	1	1						
16	T2611-79011	BULB (12V 21W)	1	1	1	1						
17	T2611-79031	BULB (12V 5W)	1	1	1	1						
18	T2350-95124	COVER, REAR LAMP (RH)	1	1	1	1						
19	38240-1883-1	SCREW	2	2	2	2						
20	K2400-46211	LAMP, TURN SIGNAL	2	2	2	2						
20	K2400-46212	LAMP, TURN SIGNAL	2	2	2	2						
21	T4240-33692	BULB (12V, 21W)	2	2	2	2						

REF. NO	PART. NO	DESCRIPTION	Q'TY								I.C	REMARK
			CK20-EU	CK20J-EU	CK20H-EU	CK20HJ-EU	CK20J-EN	CK20HJ-EN				
01	T2350-69812	COMBINATION LAMP ASS'Y	2	2	2	2	2	2				
01	T2350-69813	COMBINATION LAMP ASS'Y	2	2	2	2	2	2				
02	T2350-69822	LAMP, COMBINATION	2	2	2	2	2	2				
03	T2611-79011	BULB(12V P21W)	4	4	4	4	4	4				
04	T2611-79031	BULB(12V R5W)	2	2	2	2	2	2				
05	T2350-69831	BULB(12V 21/5W)	2	2	2	2	2	2				
06	T2351-97151	SPACER	4	4	4	4	4	4				
07	04011-50140	WASHER, PLAIN	8	8	8	8	8	8				
08	T2350-50431	GROMMET	4	4	4	4	4	4				
09	04015-50080	WASHER, PLAIN	4	4	4	4	4	4				
10	04512-50080	WASHER, SPRING	4	4	4	4	4	4				
11	02114-50080	NUT	4	4	4	4	4	4				
12	T2350-69561	HEAD LAMP ASS'Y	1	1	1	1						
12	T2352-69561	HEAD LAMP ASS'Y					1	1				
13	T2350-69551	LAMP, HEAD	2	2	2	2						
13	T2611-50631	LAMP, HEAD					2	2				
14	T2350-69571	BULB(12V 55/60W)	2	2	2	2						
14	T2611-50731	BULB(12V 55/60W)					2	2				
15	T2350-50531	COVER, HEAD LAMP	1	1	1	1	1	1				
16	38240-1883-1	SCREW	5	5	5	5	5	5				
17	T2611-75711	LICENSE LAMP ASS'Y	1	1	1	1	1	1				
18	T2611-75721	LAMP, LICENSE	1	1	1	1	1	1				
19	T2611-79021	BULB(12V R10W)	1	1	1	1	1	1				
20	03024-50414	SCREW	2	2	2	2	2	2				
21	02054-50040	NUT	2	2	2	2	2	2				

REF. NO	PART. NO	DESCRIPTION	Q'TY								I.C	REMARK
			CK20-EU	CK20J-EU	CK20H-EU	CK20HJ-EU	CK20J-EN	CK20HJ-EN				
22	T2350-95114	COVER, REAR LAMP (LH)	2	2	2	2	2	2				
23	T2350-95124	COVER, REAR LAMP (RH)	2	2	2	2	2	2				
24	T2351-95131	PLATE, REFLECTOR	4	4	4	4	4	4			◄	
24	T2351-95132	PLATE, REFLECTOR	4	4	4	4	4	4				
25	T2611-85721	REFLECTOR	4	4	4	4	4	4				

T910 LABEL GROUP

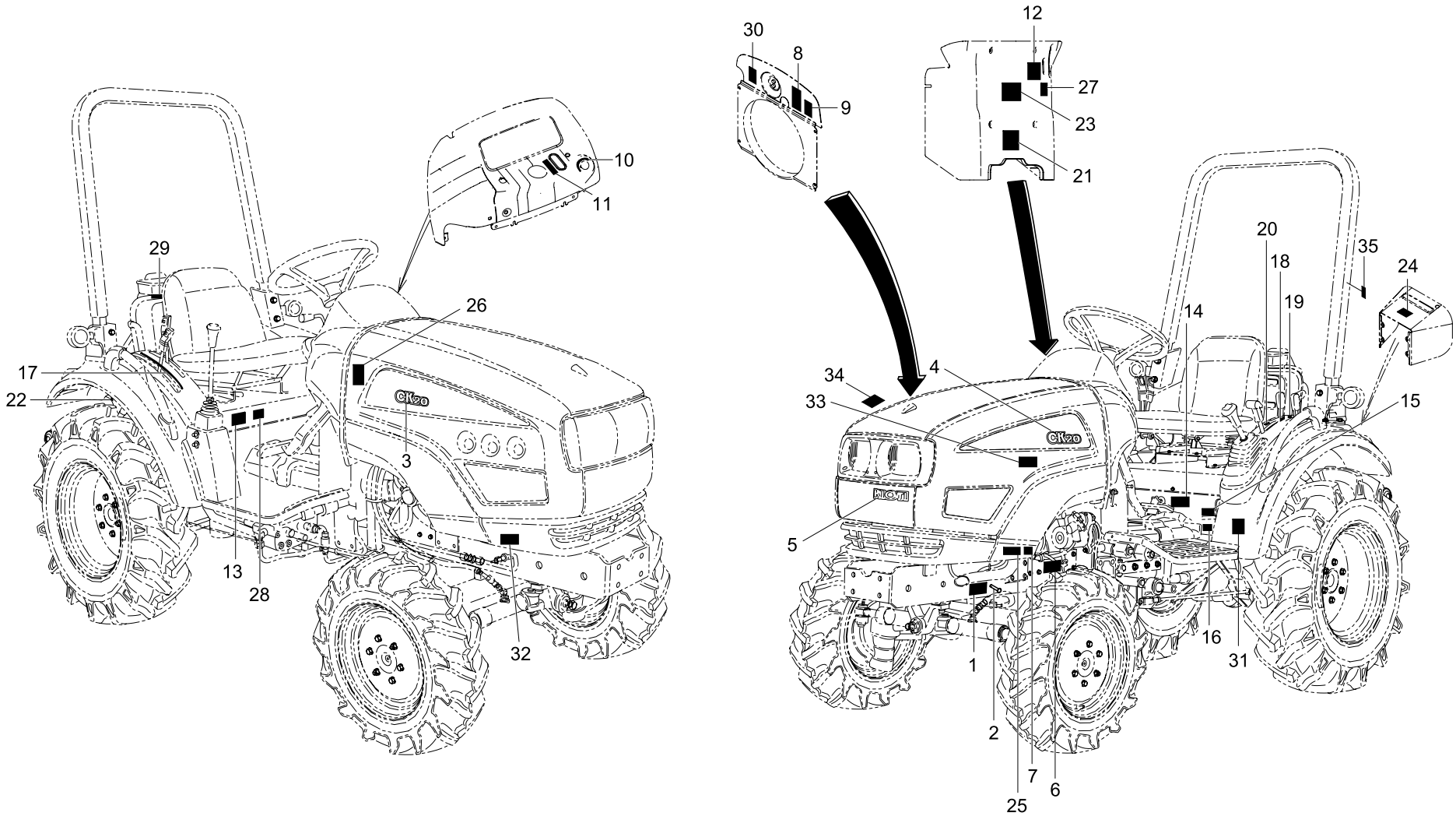

REF. NO	PART. NO	DESCRIPTION	Q'TY								I.C	REMARK
			CK20	CK20J	CK20H	CK20HJ						
01	T2350-52111	LABEL, PRODUCT	1	1								
01	T2360-52111	LABEL, PRODUCT			1	1						
02	05624-20408	RIVET	4	4	4	4						
03	T2350-52131	LABEL, MODEL (LH)	1	1	1	1						
03	T2350-52132	LABEL, MODEL (LH)	1	1	1	1						
03	T2350-52133	LABEL, MODEL (LH)	1	1	1	1						
03	T2350-53131	LABEL, MODEL	2	2	2	2						
04	T2350-52141	LABEL, MODEL (RH)	1	1	1	1						
04	T2350-52142	LABEL, MODEL (RH)	1	1	1	1						
04	T2350-52143	LABEL, MODEL (RH)	1	1	1	1						Deleted
05	T2350-52161	LABEL, KIOTI	1	1	1	1						
05	T2350-52162	LABEL, KIOTI	1	1	1	1						
05	T2350-52163	LABEL, KIOTI	1	1	1	1						
06	T2350-52171	LABEL, CARTRIDGE (ENGINE)	1	1	1	1						
07	94612-1833-1	LABEL, ENGINE OIL FILTER	1	1	1	1						
08	T4625-52351	LABEL, FAN CAUTION	1	1	1	1						
09	T4625-52361	LABEL, MUFFLER	1	1	1	1						
10	T2350-52101	LABEL, STARTER SWITCH	1	1	1	1						
11	T2350-53112	LABEL, HAND ACCEL	1	1	1	1						
12	T2350-53121	LABEL, PARKING BRAKE	1	1	1	1						
13	T2350-53141	LABEL, CARTRIDGE (TRANSMISSION)	1	1	1	1						
14	T2610-52461	LABEL, SPEED CONTROL	1	1	1	1						
15	T2445-48172	LABEL, FRONT WHEEL DRIVING	1	1	1	1						
15	T2445-48173	LABEL, FRONT WHEEL DRIVING	1	1	1	1						

T910 LABEL GROUP

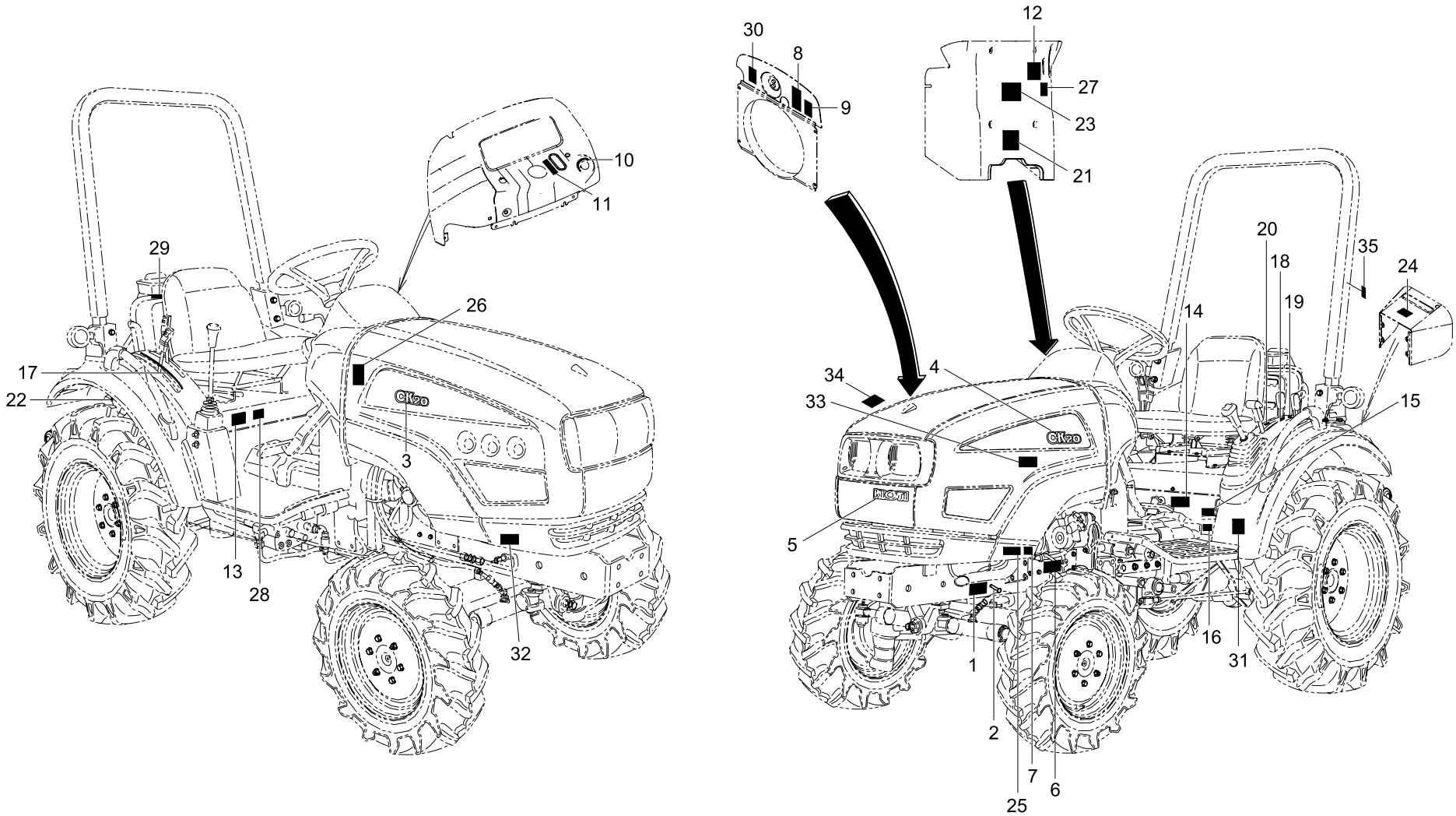

REF. NO	PART. NO	DESCRIPTION	Q'TY								I.C	REMARK
			CK20	CK20J	CK20H	CK20HJ						
16	T2611-26691	LABEL, DIFFERENTIAL LOCK	1	1	1	1						
16	T2611-26692	LABEL, DIFFERENTIAL LOCK	1	1	1	1						
17	T2350-53161	LABEL, POSITION CONTROL	1	1	1	1						
18	T2350-53182	LABEL, PTO	1	1	1	1						
19	T2350-53192	LABEL, MID PTO	1	1	1	1						
20	T2350-54111	LABEL, RANGE LEVER	1	1	1	1						
21	T2445-50724	LABEL, ROPS CAUTION	1	1	1	1						
22	T2325-50192	LABEL, FUEL FILTER	1	1	1	1						
23	T2325-50512	LABEL, SAFETY	1	1	1	1						
24	T2325-50743	LABEL, PTO CAUTION	1	1	1	1						
25	94612-9459-1	LABEL, OIL CHANGE	1	1	1	1						
26	T2360-52151	LABEL, HST			1	1						
26	T2360-52152	LABEL, HST			1	1						
26	T2195-52151	LABEL, HST			1	1						
27	T2360-53131	LABEL, HST LOCK			1	1						
28	T2360-53151	LABEL, CARTRIDGE (HST)	1	1	1	1						
29	T2615-54112	LABEL, FUEL CAUTION	1	1	1	1						
30	T2615-55112	LABEL, MUFFLER CAUTION	1	1	1	1						
31	T2350-54151	LABEL, TRAVELING SPEED										
31	T2360-54151	LABEL, TRAVELING SPEED	1	1	1	1						
32	T4689-52181	LABEL, BONNET OPEN	1	1	1	1						
33	E5752-99501	LABEL, EPA. EEC	1	1	1	1						
34	T2615-53561	LABEL, RADIATOR	1	1	1	1						
35	T2355-52431	LABEL, ROPS CERTIFICATION			1	1						

T915 LABEL GROUP

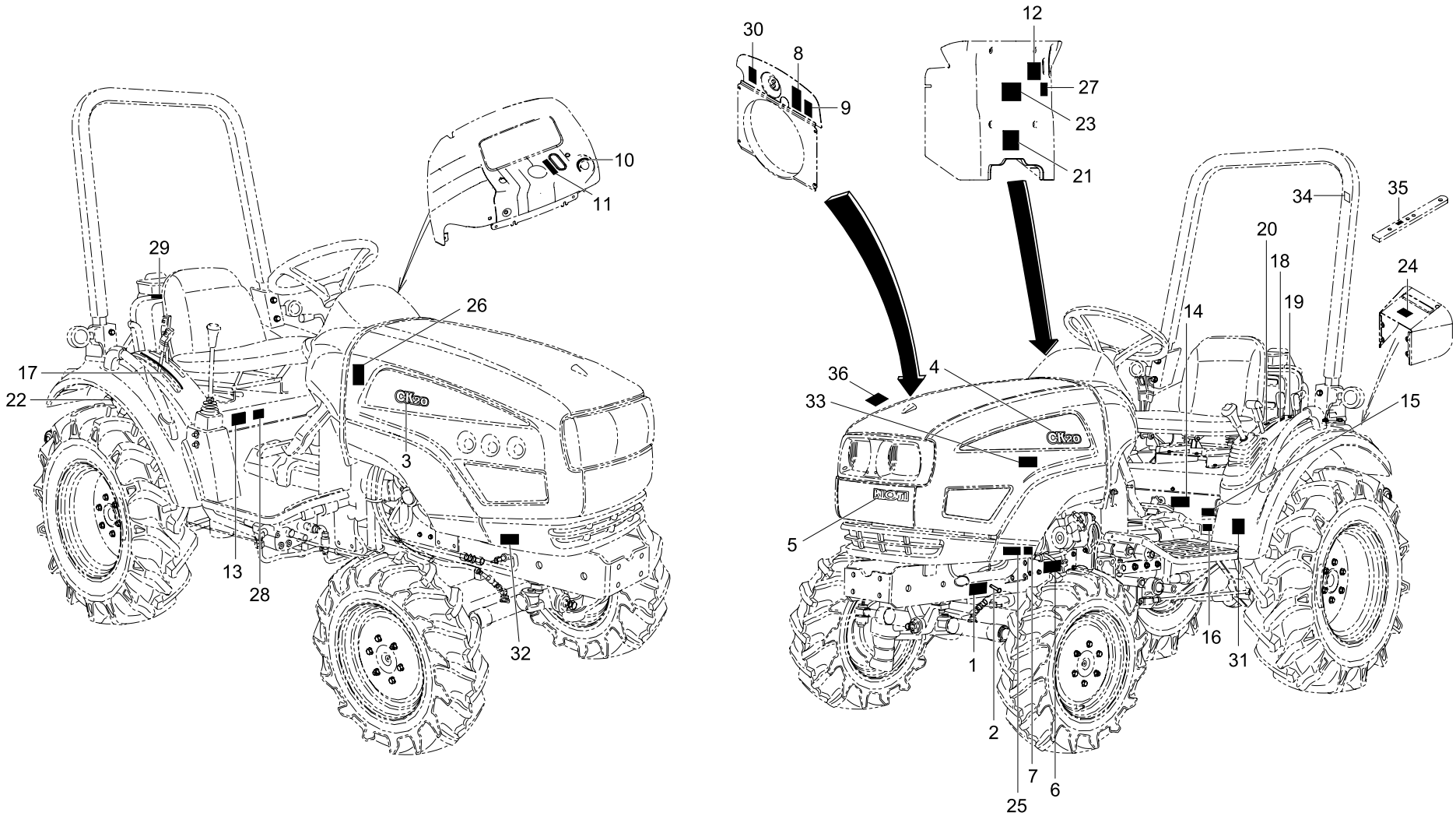

REF. NO	PART. NO	DESCRIPTION	Q'TY								I.C	REMARK
			CK20J-AU	CK20HJ-AU	CK20-SP	CK20J-SP	CK20H-SP	CK20HJ-SP	CK20J-FR	CK20HJ-FR		
01	T2371-52021	LABEL, PRODUCT	1									
01	T2361-52021	LABEL, PRODUCT		1								
01	T2353-52021	LABEL, PRODUCT			1	1	1	1				
01	T2354-52021	LABEL, PRODUCT							1	1		
02	05624-20408	RIVET	4	4	4	4	4	4	4	4		
03	T2350-52131	LABEL, MODEL (LH)	1	1	1	1	1	1	1	1		
03	T2350-52132	LABEL, MODEL (LH)	1	1	1	1	1	1	1	1		
03	T2350-52133	LABEL, MODEL (LH)	1	1	1	1	1	1	1	1		
04	T2350-52141	LABEL, MODEL (RH)			1	1	1	1	1	1		
04	T2350-52142	LABEL, MODEL (RH)			1	1	1	1	1	1		
04	T2350-52143	LABEL, MODEL (RH)			1	1	1	1	1	1		
04	T2350-53131	LABEL, MODEL			2	2	2	2	2	2		
04	T2351-53131	LABEL, MODEL	2	2								
05	T2351-52161	LABEL, DAEDONG	1	1								
05	T2351-52162	LABEL, DAEDONG	1	1								
05	T2351-52163	LABEL, DAEDONG	1	1								
05	T2350-52161	LABEL, KIOTI			1	1	1	1	1	1		
05	T2350-52162	LABEL, KIOTI			1	1	1	1	1	1		
05	T2350-52163	LABEL, KIOTI			1	1	1	1	1	1		
06	T2350-52171	LABEL, CARTRIDGE (ENGINE)	1	1								
06	T2353-52171	LABEL, CARTRIDGE (ENGINE)			1	1	1	1				
06	T2354-52171	LABEL, CARTRIDGE (ENGINE)							1	1		
07	94612-1833-1	LABEL, OIL FILTER	1	1								
07	T2353-18331	LABEL, OIL FILTER			1	1	1	1				
07	T2353-18332	LABEL, OIL FILTER			1	1	1	1				

REF. NO	PART. NO	DESCRIPTION	Q'TY								I.C	REMARK
			CK20J-AU	CK20HJ-AU	CK20-SP	CK20J-SP	CK20H-SP	CK20HJ-SP	CK20J-FR	CK20HJ-FR		
07	T2354-18331	LABEL, OIL FILTER							1	1		
07	T2354-18332	LABEL, OIL FILTER							1	1		
08	T4625-52351	LABEL, FAN CAUTION	1	1	1	1	1	1	1	1		
09	T4625-52361	LABEL, MUFFLER	1	1	1	1	1	1	1	1		
10	T2350-52101	LABEL, STARTER SWITCH	1	1								
10	T2351-52101	LABEL, STARTER SWITCH			1	1	1	1	1	1		
11	T2350-53112	LABEL, HAND ACCEL	1	1	1	1	1	1	1	1		
12	T2350-53121	LABEL, PARKING BRAKE	1	1	1	1	1	1	1	1		
13	T2350-53141	LABEL, CARTRIDGE (TRANSMISSION)	1	1								
13	T2353-53141	LABEL, CARTRIDGE (TRANSMISSION)			1	1	1	1				
13	T2354-53141	LABEL, CARTRIDGE (TRANSMISSION)							1	1		
14	T2610-52461	LABEL, SPEED CONTROL	1	1	1	1	1	1	1	1		
15	T2445-48172	LABEL, FRONT WHEEL DRIVING	1	1								
15	T2445-48173	LABEL, FRONT WHEEL DRIVING	1	1								
15	T2613-48171	LABEL, FRONT WHEEL DRIVING			1	1	1	1				
15	T2614-48171	LABEL, FRONT WHEEL DRIVING							1	1		
16	T2611-26691	LABEL, DIFFERENTIAL LOCK	1	1	1	1	1	1	1	1		
16	T2611-26692	LABEL, DIFFERENTIAL LOCK	1	1	1	1	1	1	1	1		
17	T2350-53161	LABEL, POSITION CONTROL	1	1	1	1	1	1	1	1		
18	T2350-53182	LABEL, PTO	1	1								
18	T2353-53181	LABEL, PTO			1	1	1	1				
18	T2354-53181	LABEL, PTO							1	1		
19	T2350-53192	LABEL, MID PTO	1	1								
19	T2353-53191	LABEL, MID PTO			1	1	1	1				
19	T2354-53191	LABEL, MID PTO							1	1		

REF. NO	PART. NO	DESCRIPTION	Q'TY								I.C	REMARK
			CK20J-AU	CK20HJ-AU	CK20-SP	CK20J-SP	CK20H-SP	CK20HJ-SP	CK20J-FR	CK20HJ-FR		
20	T2350-54111	LABEL, RANGE LEVER	1	1								
20	T2353-54111	LABEL, RANGE LEVER			1	1	1	1				
20	T2354-54111	LABEL, RANGE LEVER							1	1		
21	T2445-50724	LABEL, ROPS CAUTION	1	1								
21	T2613-50721	LABEL, ROPS CAUTION			1	1	1	1				
21	T2614-50721	LABEL, ROPS CAUTION							1	1		
22	T2325-50192	LABEL, FUEL FILTER	1	1								
22	T2613-50191	LABEL, FUEL FILTER			1	1	1	1				
22	T2614-50191	LABEL, FUEL FILTER							1	1		
23	T2325-50512	LABEL, SAFETY	1	1								
23	T2613-50511	LABEL, SAFETY			1	1	1	1				
23	T2614-50511	LABEL, SAFETY							1	1		
24	T2325-50743	LABEL, PTO CAUTION	1	1								
24	T2613-50741	LABEL, PTO CAUTION			1	1	1	1				
24	T2614-50741	LABEL, PTO CAUTION							1	1		
25	94612-9459-1	LABEL, OIL CHANGE	1	1								
25	T2353-94591	LABEL, OIL CHANGE			1	1	1	1				
25	T2353-94592	LABEL, OIL CHANGE			1	1	1	1				
25	T2354-94591	LABEL, OIL CHANGE							1	1		
25	T2354-94592	LABEL, OIL CHANGE							1	1		
26	T2360-52151	LABEL, HST		1			1	1		1		
26	T2360-52152	LABEL, HST		1			1	1		1		
26	T2195-52151	LABEL, HST		1			1	1		1		
27	T2360-53131	LABEL, HST LOCK		1			1	1		1		
28	T2360-53151	LABEL, CARTRIDGE (HST)	1	1								

REF. NO	PART. NO	DESCRIPTION	Q'TY								I.C	REMARK
			CK20J-AU	CK20HJ-AU	CK20-SP	CK20J-SP	CK20H-SP	CK20HJ-SP	CK20J-FR	CK20HJ-FR		
28	T2363-53151	LABEL, CARTRIDGE (HST)			1	1	1	1				
28	T2364-53151	LABEL, CARTRIDGE (HST)							1	1		
29	T2615-54112	LABEL, FUELING CAUTION	1	1								
29	T2613-54111	LABEL, FUELING CAUTION			1	1	1	1				
29	T2614-54111	LABEL, FUELING CAUTION							1	1		
30	T2615-55111	LABEL, MUFFLER CAUTION	1	1								
30	T2613-55111	LABEL, MUFFLER CAUTION			1	1	1	1				
30	T2614-55111	LABEL, MUFFLER CAUTION							1	1		
31	T2350-54151	LABEL, TRAVELING SPEED	1									
31	T2360-54151	LABEL, TRAVELING SPEED		1								
31	T2353-54151	LABEL, TRAVELING SPEED			1	1						
31	T2363-54151	LABEL, TRAVELING SPEED					1	1				
31	T2354-54151	LABEL, TRAVELING SPEED							1			
31	T2364-54151	LABEL, TRAVELING SPEED								1		
32	T4689-52181	LABEL, BONNET OPEN	1	1						1		
32	T2353-52181	LABEL, BONNET OPEN			1	1	1	1				
32	T2354-52181	LABEL, BONNET OPEN							1	1		
33	E5752-99501	LABEL, EPA. EEC	1	1	1	1	1	1	1	1		
34	T2351-52451	LABEL, CERTIFICATION OF ROPS	1	1	1	1	1	1	1	1		
34	T2351-52452	LABEL, CERTIFICATION OF ROPS	1	1	1	1	1	1	1	1		
35	T2351-52461	LABEL, CERTIFCATION OF DRAWBAR	1	1	1	1	1	1	1	1		
36	T2615-53561	LABEL, RADIATOR	1	1	1	1	1	1	1	1		

T916 LABEL GROUP

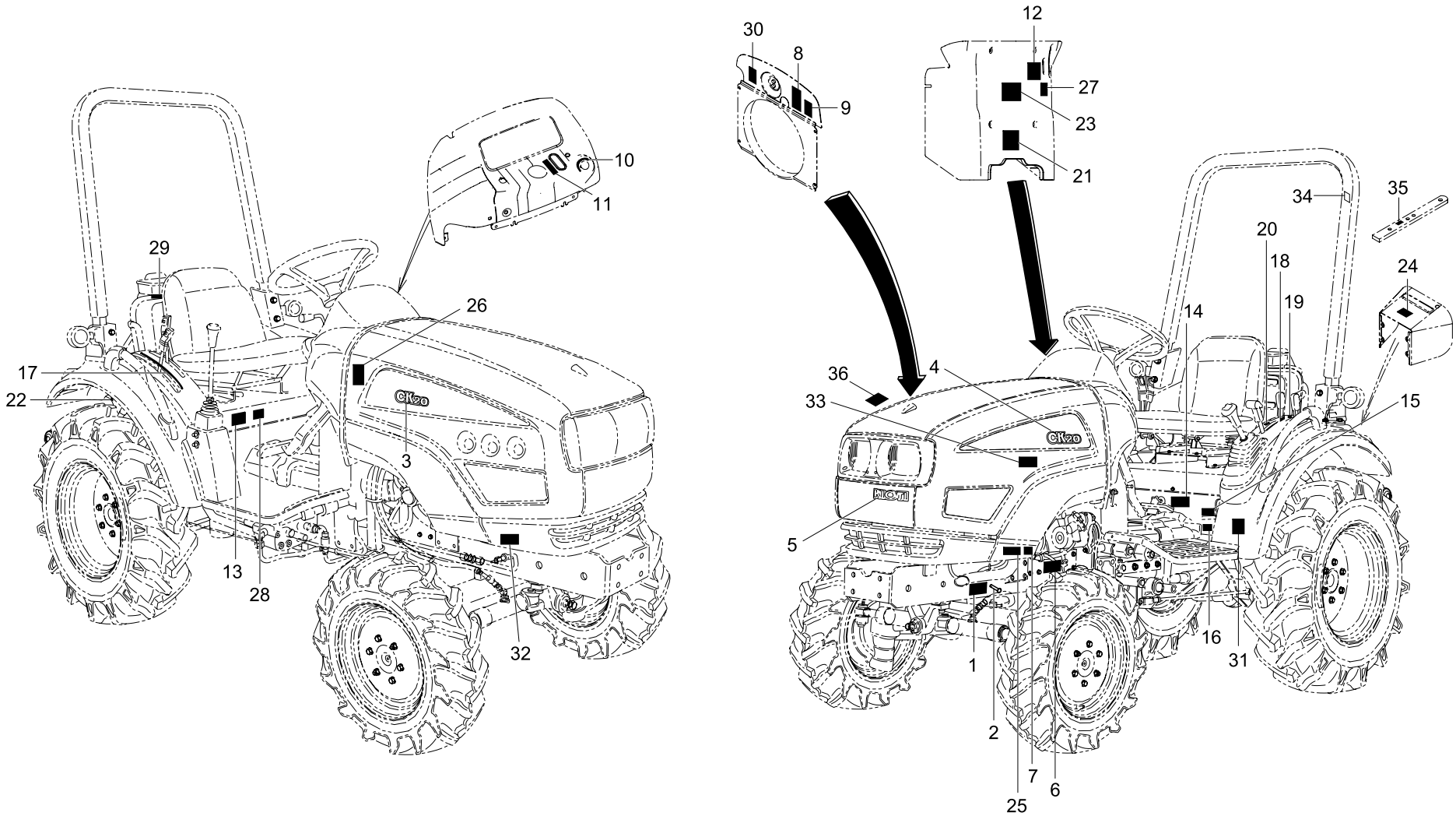

REF. NO	PART. NO	DESCRIPTION	Q'TY								I.C	REMARK
			CK20-EU	CK20(J)-NL	CK20J-IT	CK20J-EN	CK20H-EU	CK20H(J)-NL	CK20HJ-IT	CK20HJ-EN		
01	T2351-52021	LABEL, PRODUCT	1	1	1	1	1	1	1	1		
02	05624-20408	RIVET	4	4	4	4	4	4	4	4		
03	T2350-52131	LABEL, MODEL (LH)	1	1	1	1	1	1	1	1		
03	T2350-52132	LABEL, MODEL (LH)	1	1	1	1	1	1	1	1		
03	T2350-52133	LABEL, MODEL (LH)	1	1	1	1	1	1	1	1		
04	T2350-52141	LABEL, MODEL (RH)	1	1	1	1	1	1	1	1		
04	T2350-52142	LABEL, MODEL (RH)	1	1	1	1	1	1	1	1		
04	T2350-52143	LABEL, MODEL (RH)	1	1	1	1	1	1	1	1		
05	T2350-52161	LABEL, KIOTI	1	1	1	1	1	1	1	1		
05	T2350-52162	LABEL, KIOTI	1	1	1	1	1	1	1	1		
05	T2350-52163	LABEL, KIOTI	1	1	1	1	1	1	1	1		
06	T2350-52171	LABEL, CARTRIDGE (ENGINE)	1	1	1	1	1	1	1	1		
07	94612-1833-1	LABEL, ENGINE OIL FILTER	1	1	1	1	1	1	1	1		
08	T4625-52351	LABEL, FAN CAUTION	1	1	1	1	1	1	1	1		
09	T4625-52361	LABEL, MUFFLER	1	1	1	1	1	1	1	1		
10	T2350-52101	LABEL, STARTER SWITCH	1	1	1	1	1	1	1	1		
11	T2350-53112	LABEL, HAND ACCEL	1	1	1	1	1	1	1	1		
12	T2350-53121	LABEL, PARKING BRAKE	1	1	1	1	1	1	1	1		
13	T2350-53141	LABEL, CARTRIDGE (TRANSMISSION)	1	1	1	1	1	1	1	1		
14	T2610-52461	LABEL, SPEED CONTROL	1	1	1	1	1	1	1	1		
15	T2445-48172	LABEL, FRONT WHEEL DRIVING	1	1	1	1	1	1	1	1		
15	T2445-48173	LABEL, FRONT WHEEL DRIVING	1	1	1	1	1	1	1	1		
16	T2611-26691	LABEL, DIFFERENTIAL LOCK	1	1	1	1	1	1	1	1		
16	T2611-26692	LABEL, DIFFERENTIAL LOCK	1	1	1	1	1	1	1	1		
17	T2350-53161	LABEL, POSITION CONTROL	1	1	1	1	1	1	1	1		

REF. NO	PART. NO	DESCRIPTION	Q'TY								I.C	REMARK
			CK20-EU	CK20(J)-NL	CK20J-IT	CK20J-EN	CK20H-EU	CK20H(J)-NL	CK20HJ-IT	CK20HJ-EN		
18	T2350-53182	LABEL, PTO	1	1	1	1	1	1	1	1		
19	T2350-53192	LABEL, MID PTO	1	1	1	1	1	1	1	1		
20	T2350-54111	LABEL, RANGE LEVER	1	1	1	1	1	1	1	1		
21	T2445-50724	LABEL, ROPS CAUTION	1	1	1	1	1	1	1	1		
22	T2325-50192	LABEL, FUEL FILTER	1	1	1	1	1	1	1	1		
23	T2325-50512	LABEL, SAFETY	1	1	1	1	1	1	1	1		
24	T2325-50743	LABEL, PTO CAUTION	1	1	1	1	1	1	1	1		
25	94612-9459-1	LABEL, OILDHANGE	1	1	1	1	1	1	1	1		
26	T2360-52151	LABEL, HST					1	1	1	1		
26	T2360-52152	LABEL, HST					1	1	1	1		
27	T2360-53131	LABEL, HST LOCK					1	1	1	1		
28	T2360-53151	LABEL, CARTRIDGE (HST)					1	1	1	1		
29	T2615-54112	LABEL, FUEL CAUTION	1	1	1	1	1	1	1	1		
30	T2615-55112	LABEL, MUFFLER CAUTION	1	1	1	1	1	1	1	1		
31	T2350-54151	LABEL, TRAVELING SPEED	1	1	1	1						
31	T2360-54151	LABEL, TRAVELING SPEED					1	1	1	1		
32	T4689-52181	LABEL, BONNET OPEN	1	1	1	1	1	1	1	1		
33	E5752-99501	LABEL, EPA. EEC	1	1	1	1	1	1	1	1		
34	T2351-52451	LABEL, CERTIFICATION OF ROPS	1	1	1	1	1	1	1	1		
34	T2351-52452	LABEL, CERTIFICATION OF ROPS	1	1	1	1	1	1	1	1		
35	T2351-52461	LABEL, CERTIFICATION OF DRAWBAR	1	1	1	1	1	1	1	1		
36	T2615-53561	LABEL, RADIATOR	1	1	1	1	1	1	1	1		

T920 ROPS GROUP (Option)

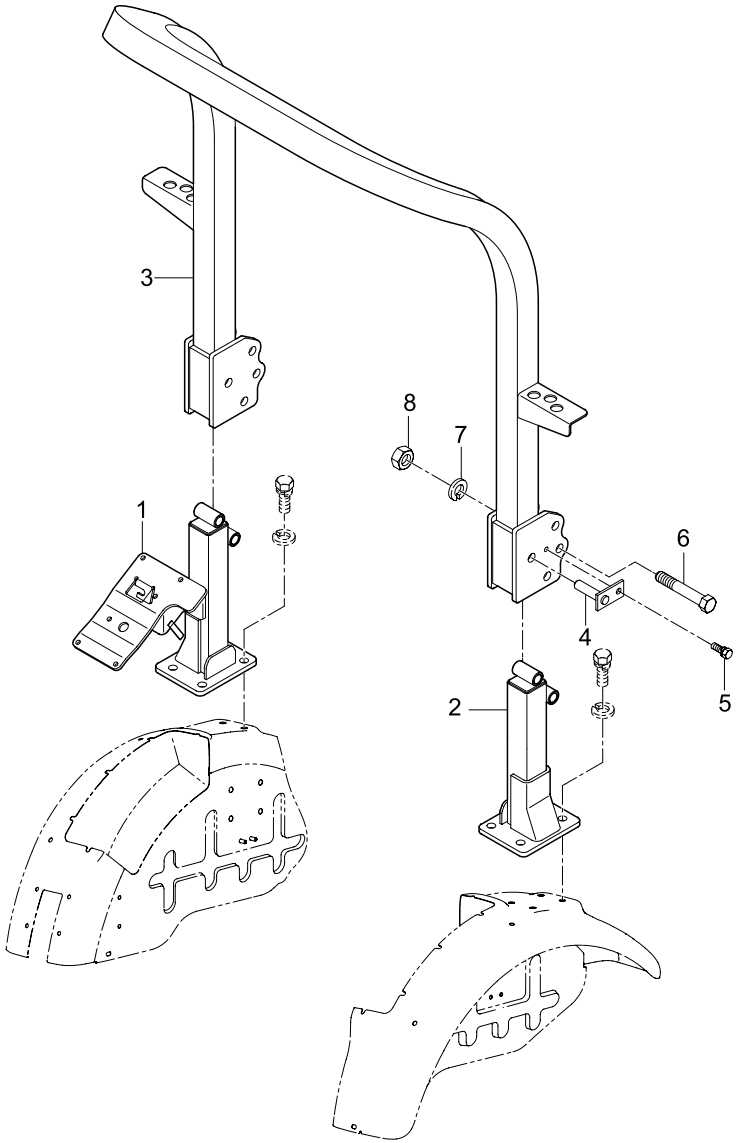

REF. NO	PART. NO	DESCRIPTION	Q'TY								I.C	REMARK
			CK20-EU	CK20-NL	CK20J-NL	CK20J-IT	CK20J-EN	CK20-SP	CK20J-SP	CK20J-FR		
01	T2351-97133	SUPPORT (RH)	1	1	1	1	1	1	1	1		
01	T2351-97134	SUPPORT (RH)	1	1	1	1	1	1	1	1		
02	T2351-97122	SUPPORT (LH)	1	1	1	1	1	1	1	1		
03	T2351-97112	ROPS ASS'Y	1	1	1	1	1	1	1	1		
04	T2351-97141	PIN, SET (ROPS)	2	2	2	2	2	2	2	2		
05	01123-51016	BOLT	2	2	2	2	2	2	2	2		
05	01133-51016	BOLT	2	2	2	2	2	2	2	2		
06	01173-51690	BOLT	2	2	2	2	2	2	2	2		
07	04512-50160	WASHER, SPRING	2	2	2	2	2	2	2	2		
08	02176-50160	NUT	2	2	2	2	2	2	2	2		

T921 ROPS GROUP (Option)

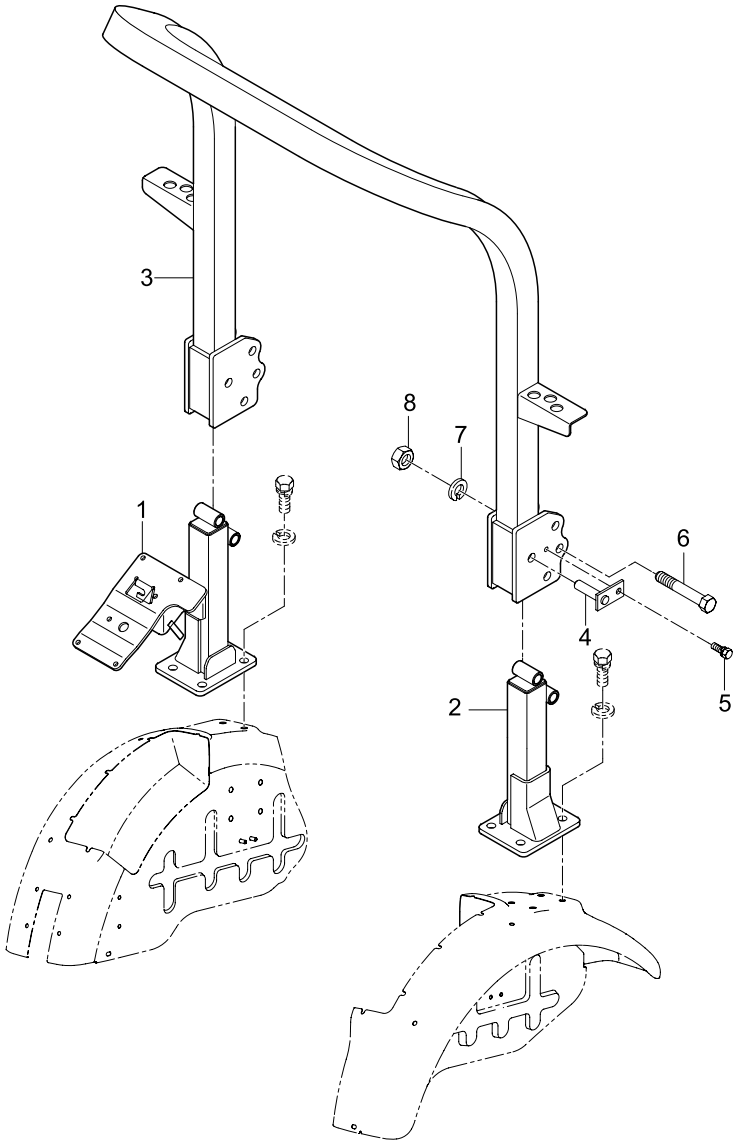

REF. NO	PART. NO	DESCRIPTION	Q'TY								I.C	REMARK
			CK20H-EU	CK20H-NL	CK20HJ-NL	CK20H-SP	CK20HJ-EN	CK20H-SP	CK20HJ-SP	CK20HJ-FR		
01	T2361-97131	SUPPORT (RH)	1	1	1	1	1	1	1	1		
02	T2351-97122	SUPPORT (LH)	1	1	1	1	1	1	1	1		
03	T2351-97112	ROPS ASS'Y	1	1	1	1	1	1	1	1		
04	T2351-97141	PIN, SET (ROPS)	2	2	2	2	2	2	2	2		
05	01123-51016	BOLT	2	2	2	2	2	2	2	2		
05	01133-51016	BOLT	2	2	2	2	2	2	2	2		
06	01173-51690	BOLT	2	2	2	2	2	2	2	2		
07	04512-50160	WASHER, SPRING	2	2	2	2	2	2	2	2		
08	02176-50160	NUT	2	2	2	2	2	2	2	2		

T925 ROPS GROUP (Option)

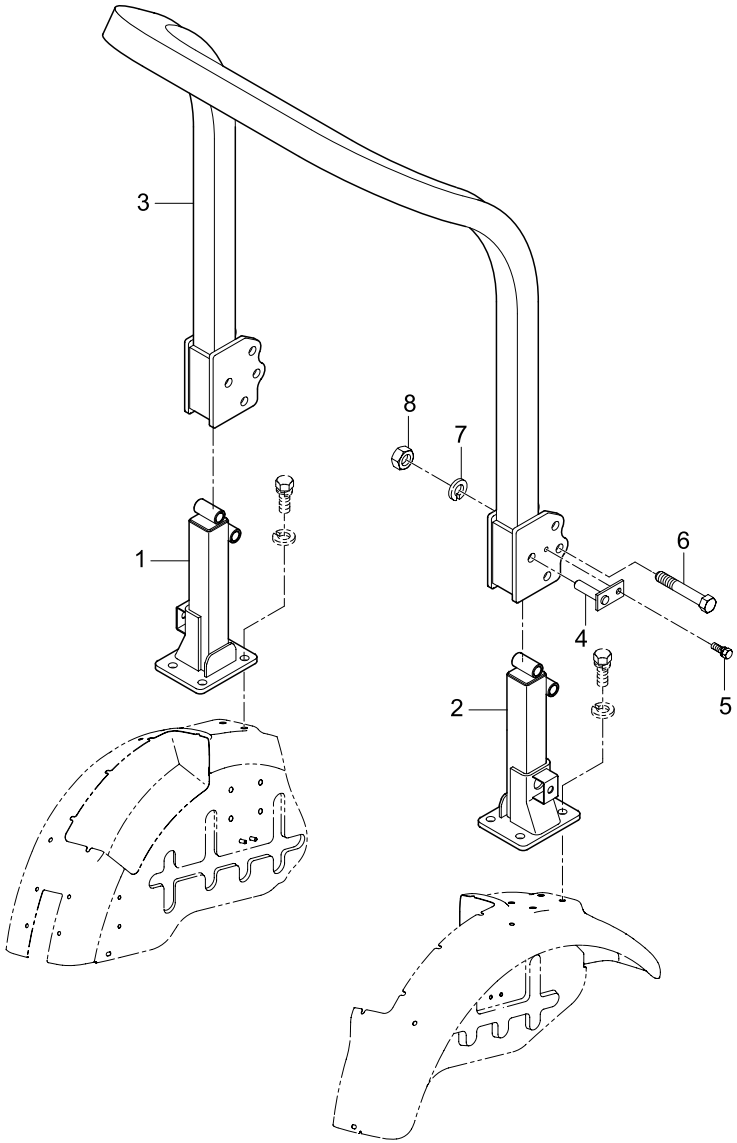

REF. NO	PART. NO	DESCRIPTION	Q'TY								I.C	REMARK
			CK20J-AU	CK20HJ-AU								
01	T2350-97131	SUPPORT (RH)	1	1								
02	T2350-97121	SUPPORT (LH)	1	1								
03	T2350-97111	ROPS ASS'Y	1	1								
04	T2351-97141	PIN, SET (ROPS)	2	2								
05	01123-51016	BOLT	2	2								
05	01133-51016	BOLT	2	2								
06	01173-51690	BOLT	2	2								
07	04512-50160	WASHER, SPRING	2	2								
08	02176-50160	NUT	2	2								

T928 ROPS GROUP (Option)

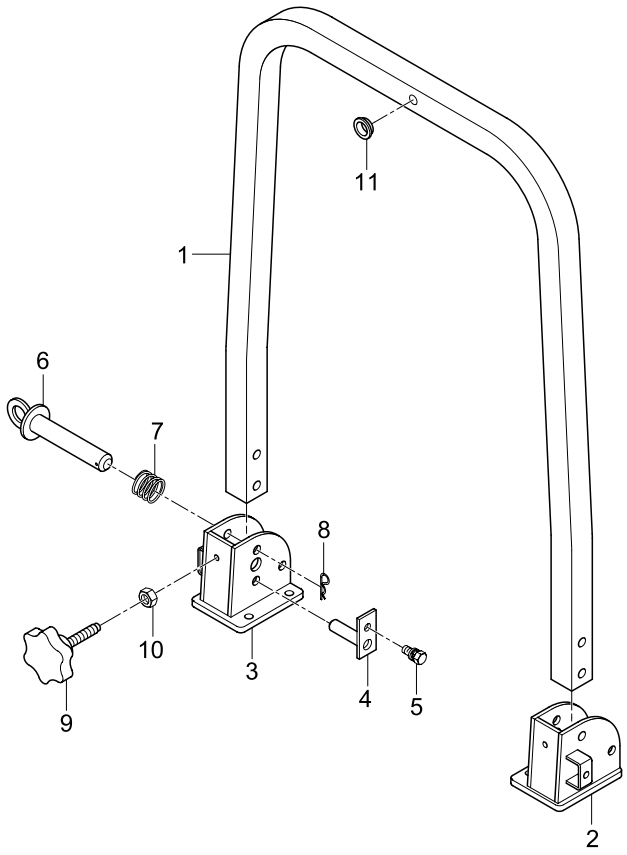

REF. NO	PART. NO	DESCRIPTION	Q'TY								I.C	REMARK
			CK20	CK20J	CK20H	CK20HJ						
01	T2355-97111	ROPS ASS'Y	1	1	1	1						
01	T2355-97112	ROPS ASS'Y	1	1	1	1						
02	T2355-97121	SUPPORT (LH)	1	1		1						
					1							
03	T2355-97131	SUPPORT (RH)	1	1		1						
					1							
04	T2185-97141	PIN, SET (ROPS)	2	2		2						
					2							
05	01133-51016	BOLT	2	2		2						
					2							
06	T2185-97152	PIN , SET B (ROPS)	2	2		2						
					2							
07	T2185-97161	SPRING	2	2		2						
					2							
08	05515-51600	PIN, SNAP	2	2		2						
					2							
09	T2185-97181	BOLT, GRIP	2	2		2						
					2							
10	02074-50120	NUT	2	2		2						
					2							
10	02172-50120	NUT	2	2		2						
					2							
11	T4620-60151	GROMMET	1	1		1						
					1							

T930 TOWING HOOK GROUP (Option)

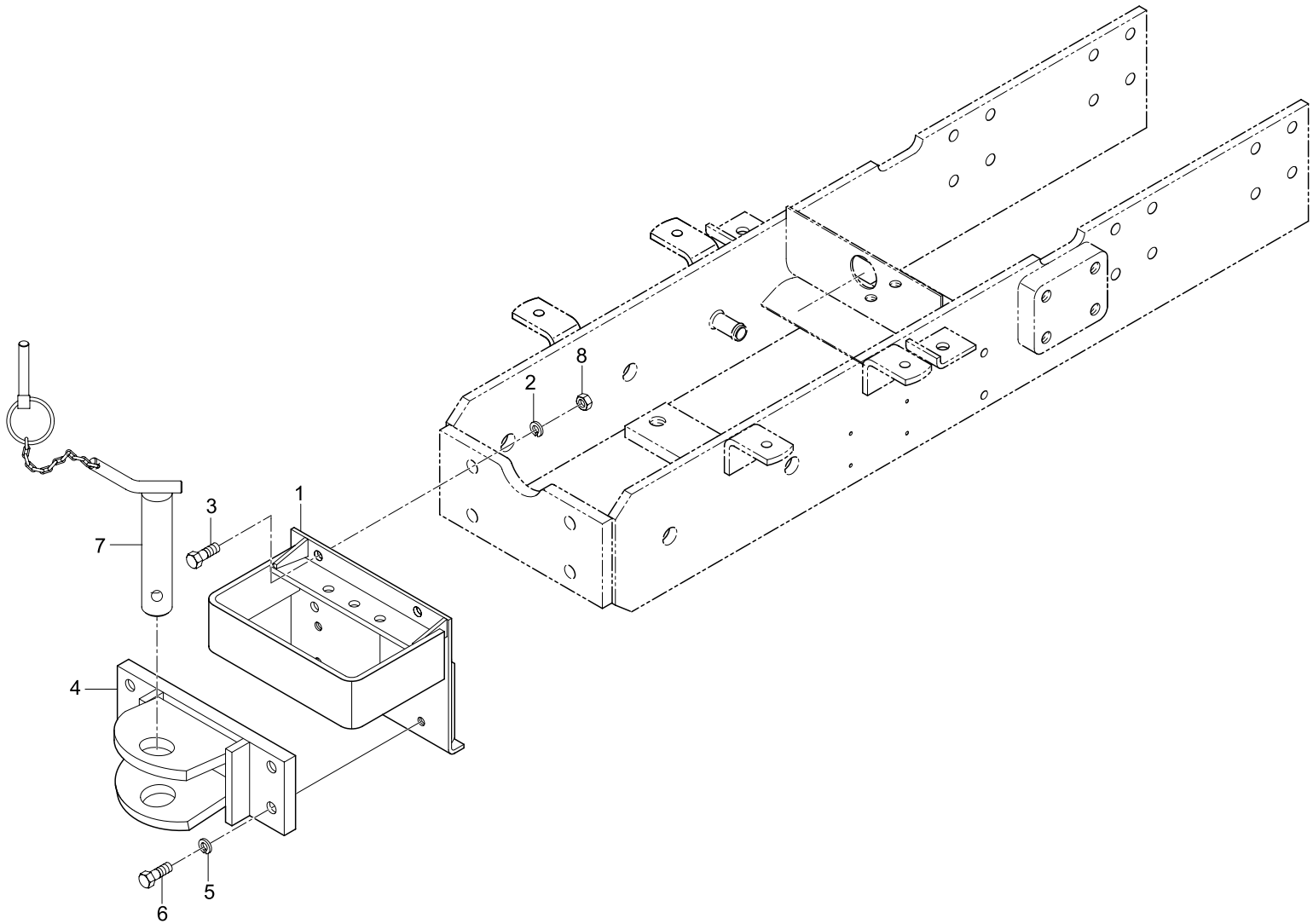

REF. NO	PART. NO	DESCRIPTION	Q'TY								I.C	REMARK
			CK20HJ-FR	CK20-EU	CK20-NL	CK20J-NL	CK20J-IT	CK20J-EN	CK20-SP	CK20J-SP		
01	T2351-50021	BRACKET, FRONT WEIGHT	1	1	1	1	1	1	1	1		
02	04512-50140	WASHER, SPRING	4	4	4	4	4	4	4	4		
03	01173-51425	BOLT	4	4	4	4	4	4	4	4		
04	T2351-50031	BRACKET, TOWING HOOK	1	1	1	1	1	1	1	1		
05	04512-50120	WASHER, SPRING	4	4	4	4	4	4	4	4		
06	01176-51240	BOLT	4	4	4	4	4	4	4	4		
07	T2611-50041	PIN, JOINT	2	2	2	2	2	2	2	2		
08	02174-50120	NUT	4	4	4	4	4	4	4	4		

T931 TOWING HOOK GROUP (Option)

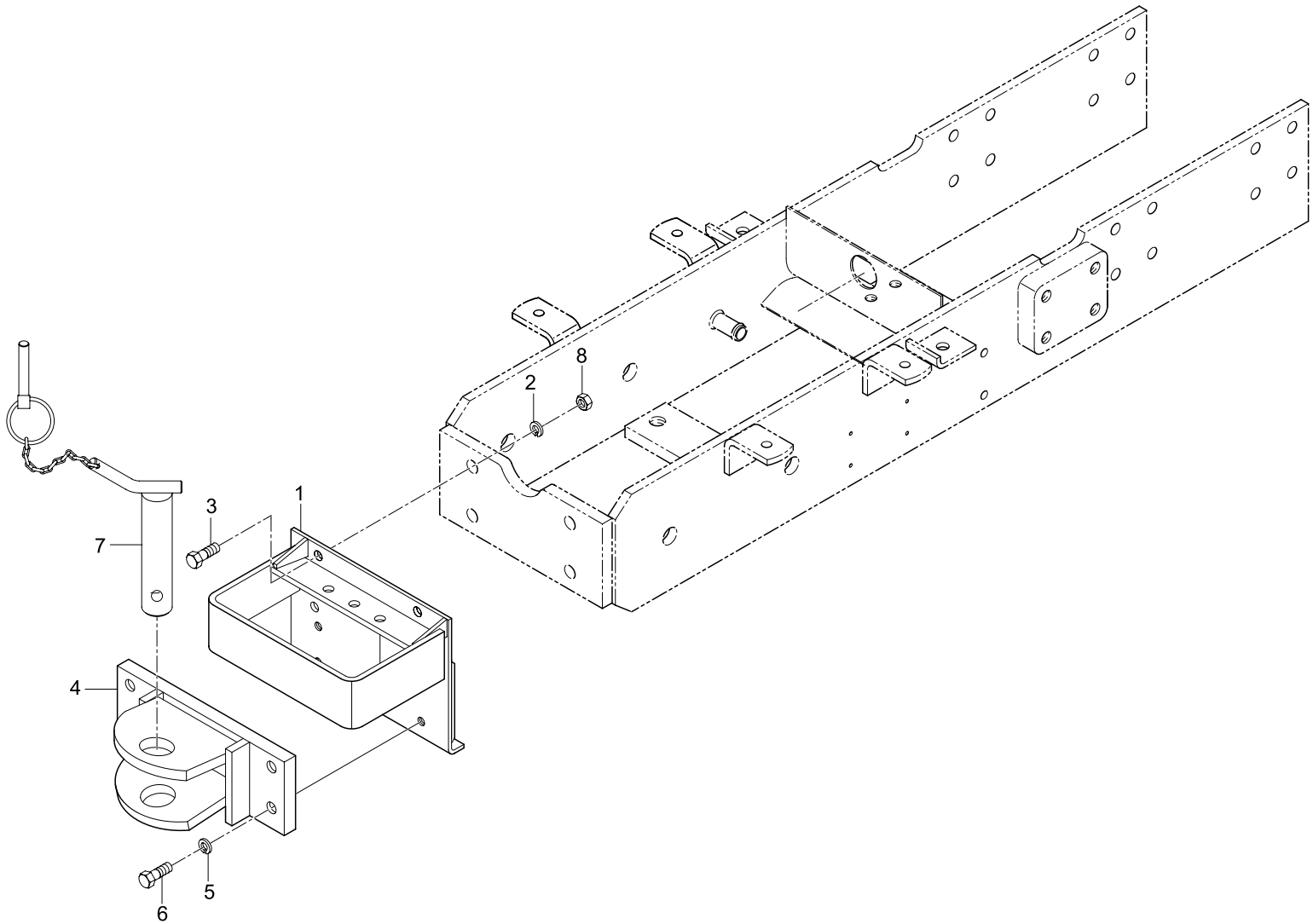

REF. NO	PART. NO	DESCRIPTION	Q'TY								I.C	REMARK
			CK20J-FR	CK20H-EU	CK20H-NL	CK20HJ-NL	CK20HJ-IT	CK20HJ-EN	CK20H-SP	CK20HJ-SP		
01	T2351-50021	BRACKET, FRONT WEIGHT	1	1	1	1	1	1	1	1		
02	04512-50140	WASHER, SPRING	4	4	4	4	4	4	4	4		
03	01173-51425	BOLT	4	4	4	4	4	4	4	4		
04	T2351-50031	BRACKET, TOWING HOOK	1	1	1	1	1	1	1	1		
05	04512-50120	WASHER, SPRING	4	4	4	4	4	4	4	4		
06	01176-51240	BOLT	4	4	4	4	4	4	4	4		
07	T2611-50041	PIN, JOINT	2	2	2	2	2	2	2	2		
08	02174-50120	NUT	4	4	4	4	4	4	4	4		

T940-1 FRONT WEIGHT GROUP (Option)

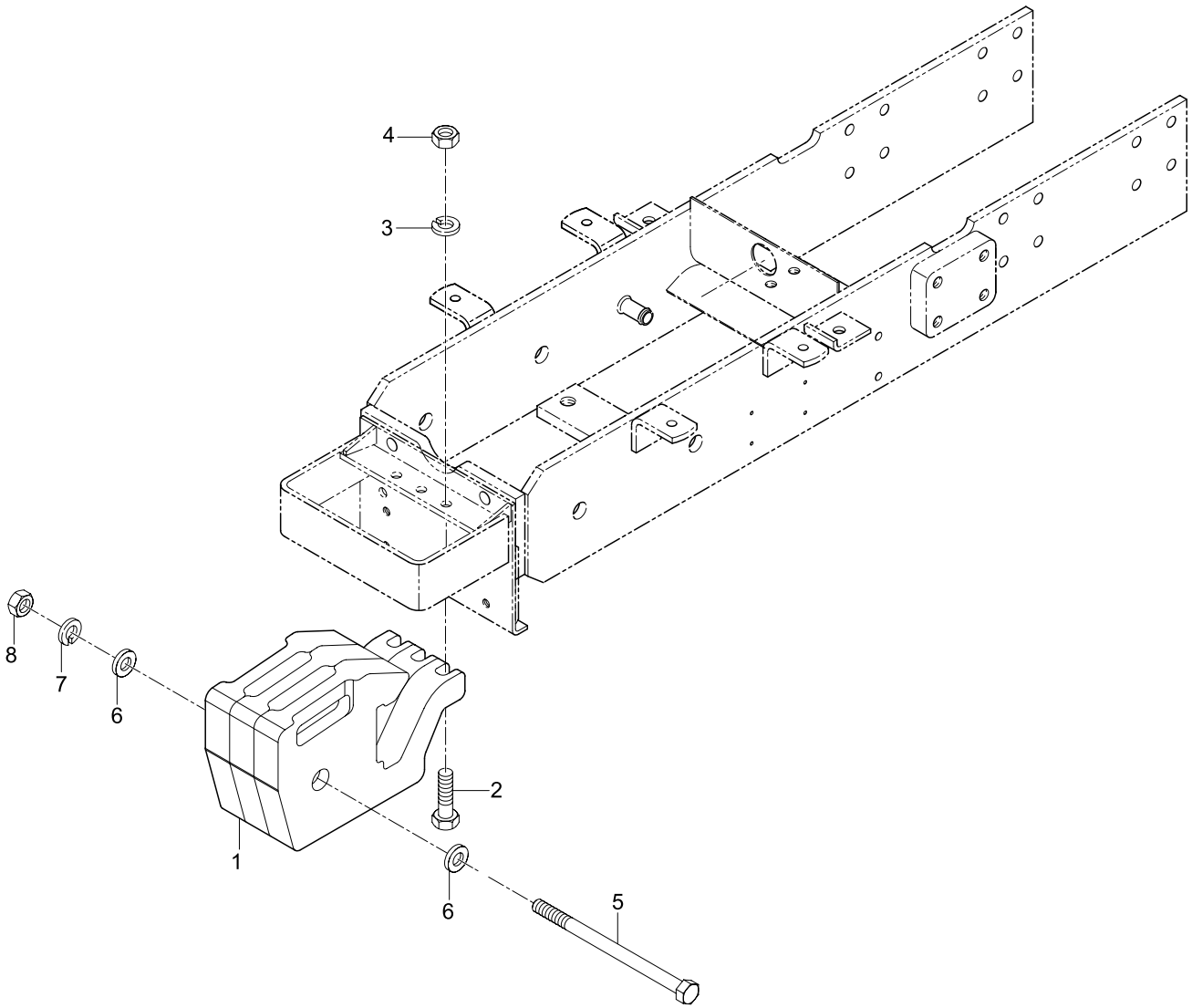

REF. NO	PART. NO	DESCRIPTION	Q'TY								I.C	REMARK
			CK20-NL	CK20J-NL	CK20-SP	CK20H-NL	CK20HJ-NL	CK20H-SP				
01	T2540-54602	WEIGHT	3	3	3	3	3	3				
02	01073-51460	BOLT	3	3	3	3	3	3				
03	04512-50140	WASHER, SPRING	3	3	3	3	3	3				
04	02176-50140	NUT	3	3	3	3	3	3				
05	76711-5463-0	BOLT	1	1	1	1	1	1				
06	04013-50120	WASHER, PLAIN	2	2	2	2	2	2				
07	04512-50120	WASHER, SPRING	1	1	1	1	1	1				
08	02176-50120	NUT	1	1	1	1	1	1				

T940-2 REAR WHEEL WEIGHT GROUP (Option)

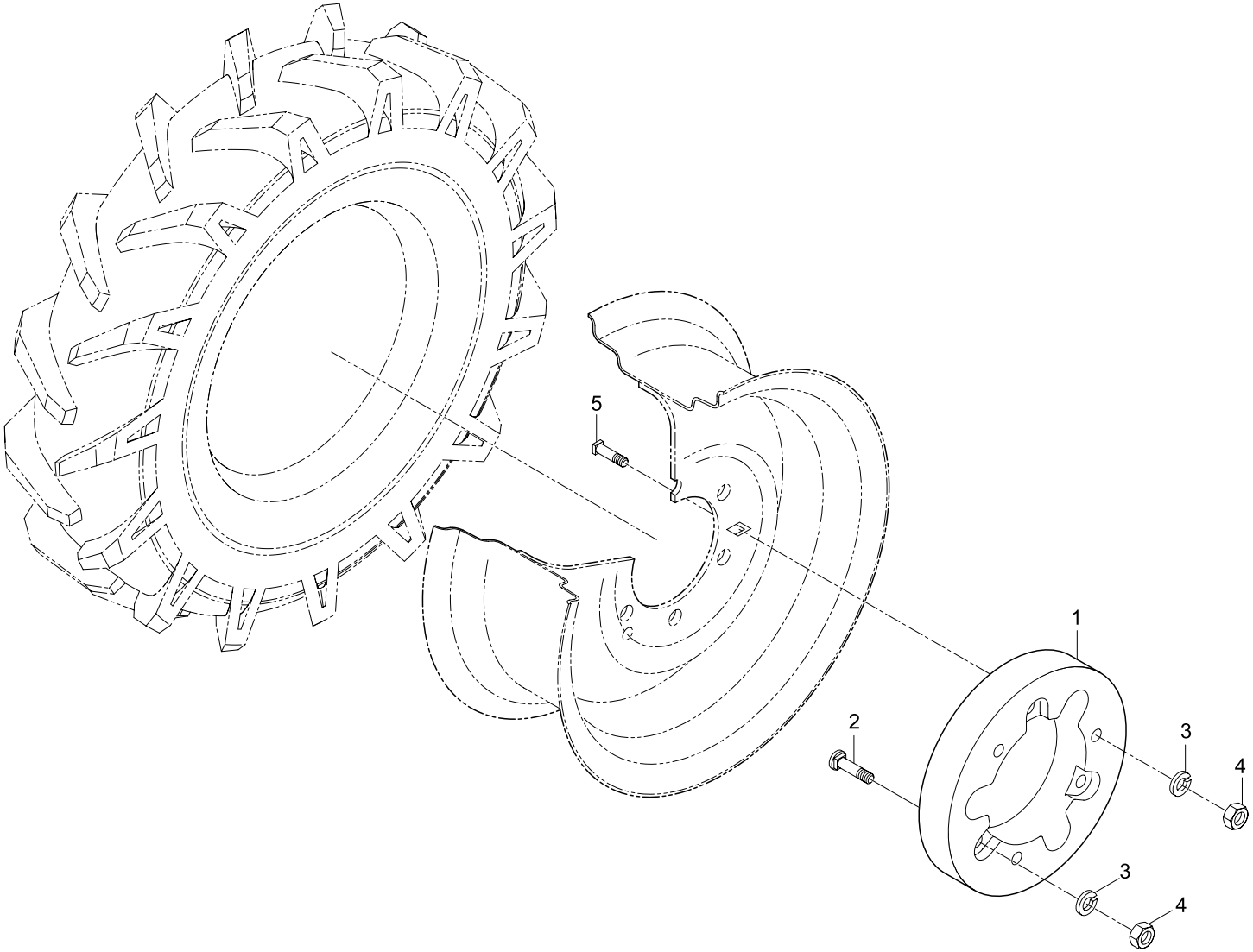

REF. NO	PART. NO	DESCRIPTION	Q'TY								I.C	REMARK
			CK20	CK20J	CK20H	CK20HJ	CK20-EU	CK20J-EU	CK20H-EU	CK20HJ-EU		
01	T2351-27741	WEIGHT, REAR WHEEL					4	4	4	4		
02	99415-1503-1	BOLT, WEIGHT					6	6	6	6		
03	04512-50160	WASHER, SPRING					12	12	12	12		
04	02074-50160	NUT					12	12	12	12		
05	T2351-27751	BOLT, WEIGHT					6	6	6	6		

T960 7 PIN SOCKET GROUP (Option)

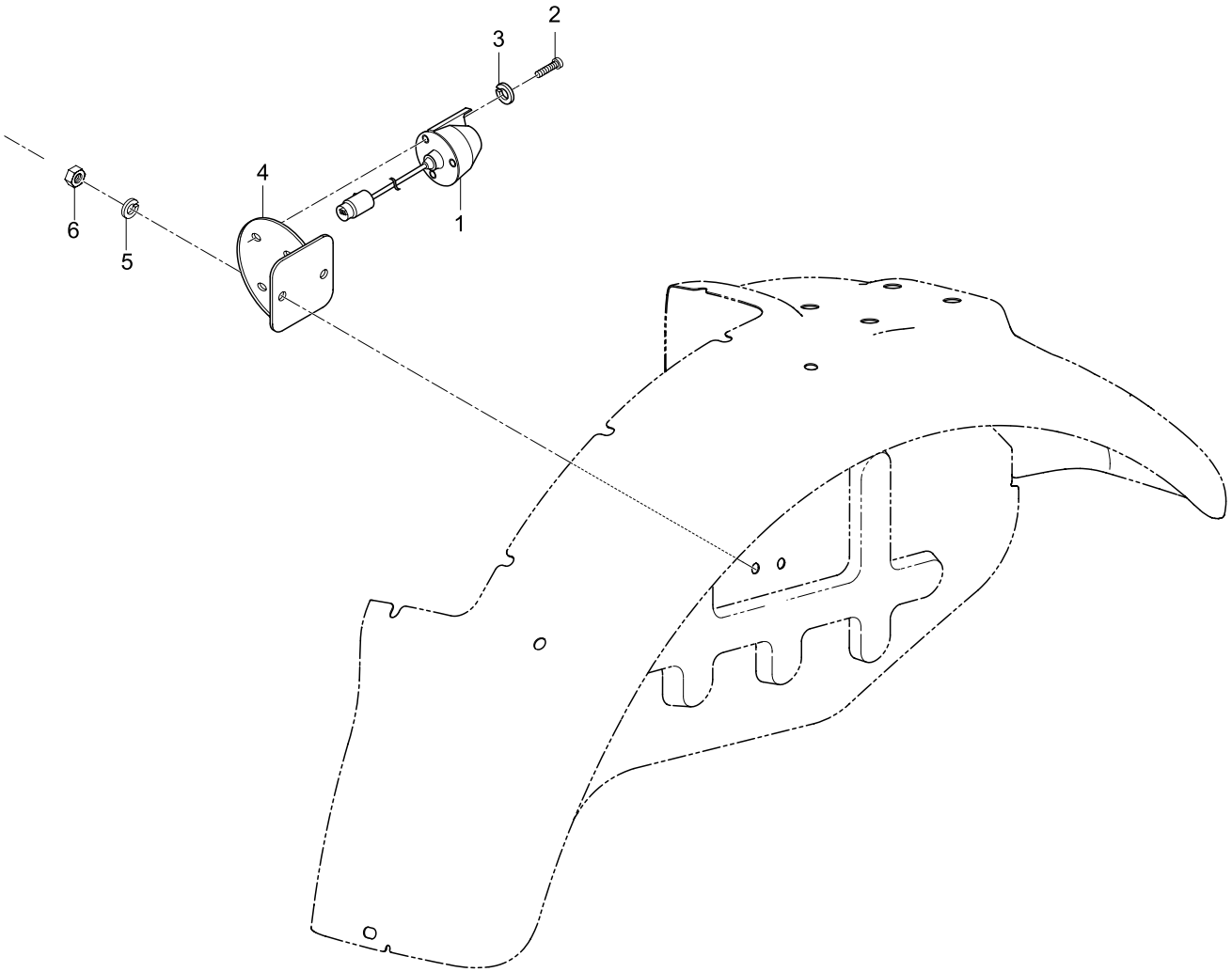

REF. NO	PART. NO	DESCRIPTION	Q'TY								I.C	REMARK
			CK20	CK20J	CK20H	CK20HJ	CK20-EU	CK20J-EU	CK20H-EU	CK20HJ-EU		
01	T4810-69931	7 PIN SOCKET ASS'Y	1	1	1	1						
01	T2611-69931	7 PIN SOCKET ASS'Y					1	1	1	1		
02	03054-50540	SCREW	3	3	3	3	3	3	3	3		
03	04512-50050	WASHER, SPRING	3	3	3	3	3	3	3	3		
04	T2350-95611	BRACKET	1	1	1	1	1	1	1	1		
05	04512-50080	WASHER, SPRING	2	2	2	2	2	2	2	2		
06	02114-50080	NUT	2	2	2	2	2	2	2	2		

T970 BACKMIRROR GROUP

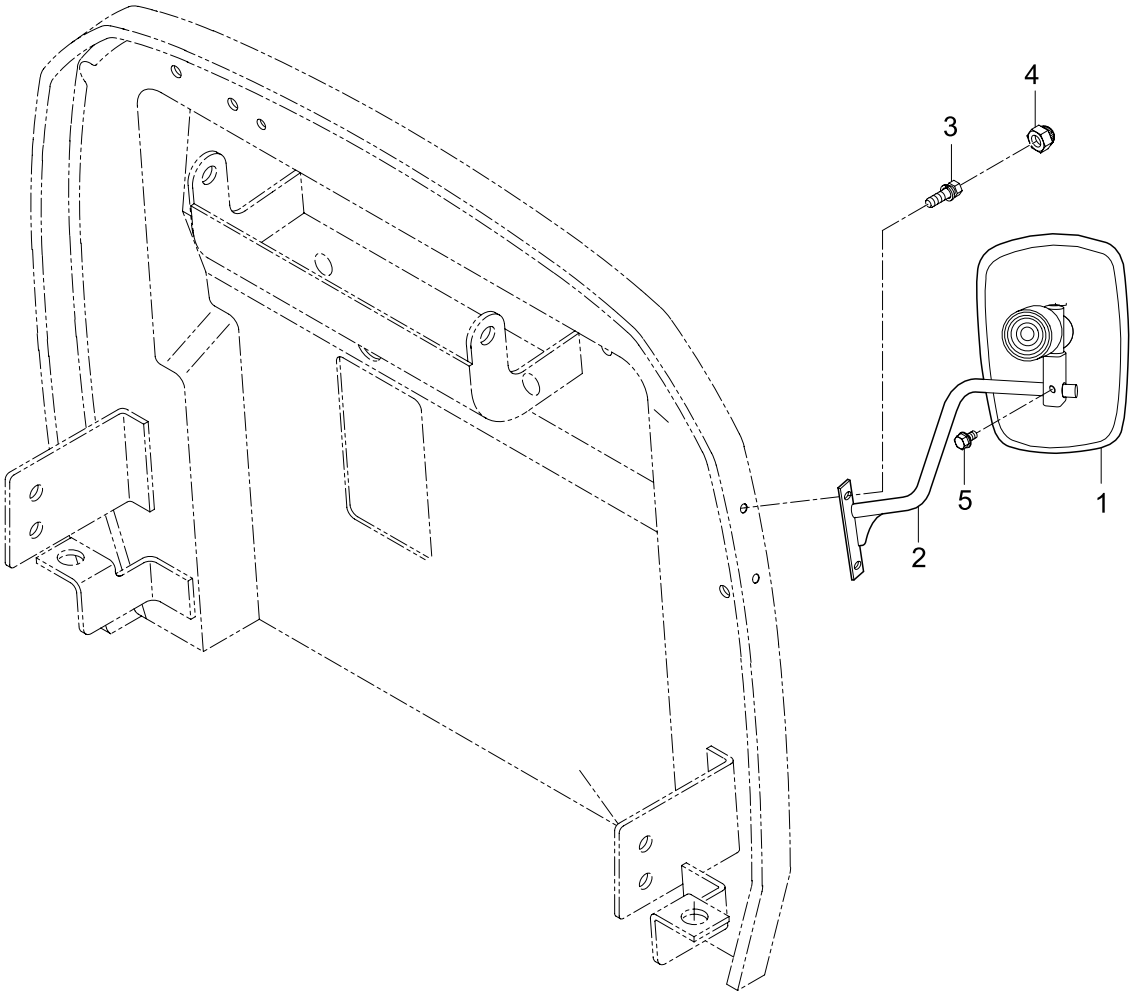

REF. NO	PART. NO	DESCRIPTION	Q'TY								I.C	REMARK
			CK20-EU	CK20-NL	CK20J-NL	CK20J-IT	CK20-SP	CK20J-SP	CK20J-FR	CK20H-EU		
01	T2611-87821	MIRROR, REAR VIEW	1	1	1	1	1	1	1	1		
01	T2611-87822	MIRROR, REAR VIEW	1	1	1	1	1	1	1	1		
02	T2351-81531	BAR, REAR VIEW MIRROR (LH)	1	1	1	1	1	1	1	1		
02	T2351-81532	BAR, REAR VIEW MIRROR (LH)	1	1	1	1	1	1	1	1		
03	01123-50816	BOLT	2	2	2	2	2	2	2	2		
04	T4815-93211	CAP, NUT	2	2	2	2	2	2	2	2		
05	T4625-55431	BOLT, FLANGE	1	1	1	1	1	1	1	1		

T971 BACKMIRROR GROUP

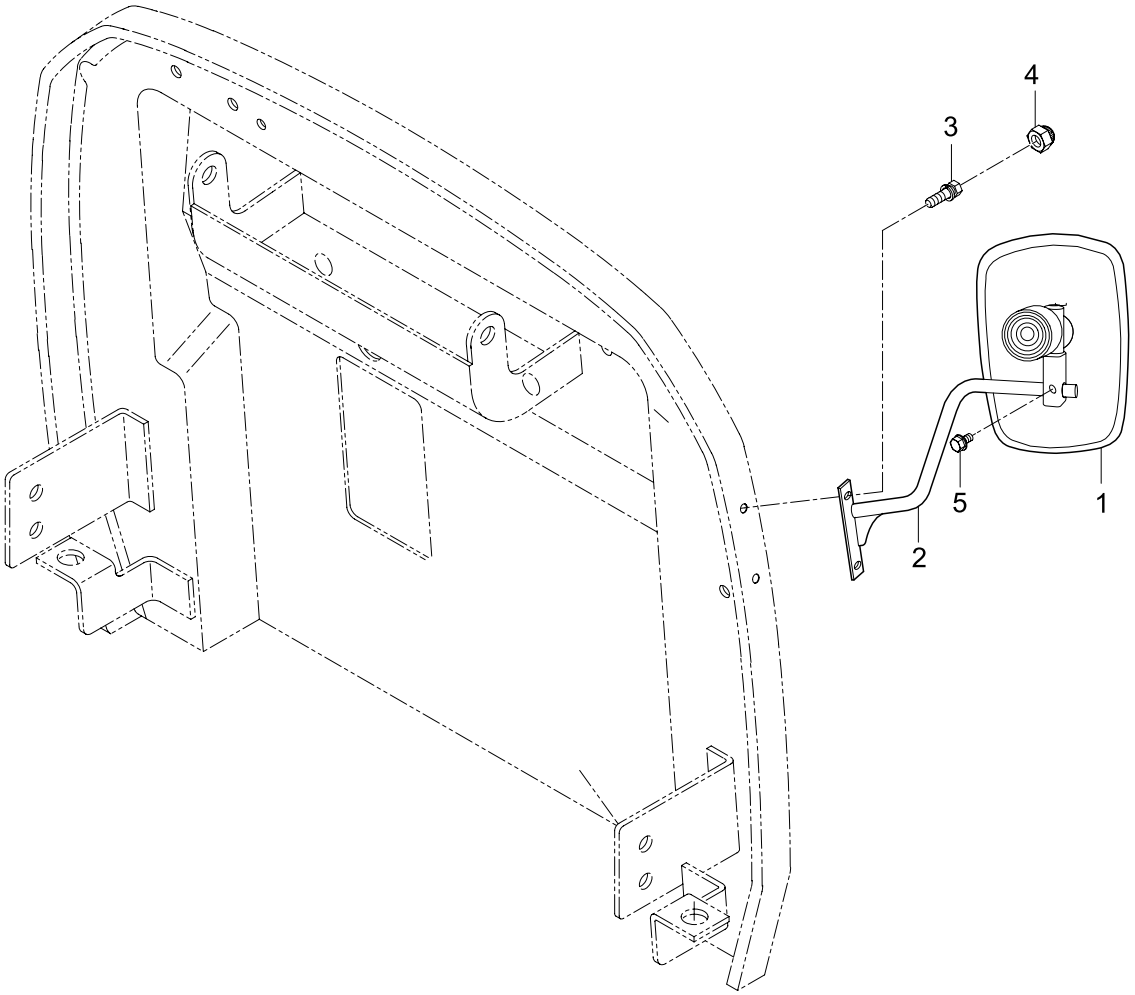

REF. NO	PART. NO	DESCRIPTION	Q'TY								I.C	REMARK
			CK20H-NL	CK20HJ-NL	CK20HJ-IT	CK20H-SP	CK20HJ-FR					
01	T2611-87821	MIRROR, REAR VIEW	1	1	1	1	1					
01	T2611-87822	MIRROR, REAR VIEW	1	1	1	1	1					
02	T2351-81531	BAR, REAR VIEW MIRROR (LH)	1	1	1	1	1					
02	T2351-81532	BAR, REAR VIEW MIRROR (LH)	1	1	1	1	1					
03	01123-50816	BOLT	2	2	2	2	2					
04	T4815-93211	CAP, NUT	2	2	2	2	2					
05	T4625-55431	BOLT, FLANGE	1	1	1	1	1					

T975 BACKMIRROR GROUP

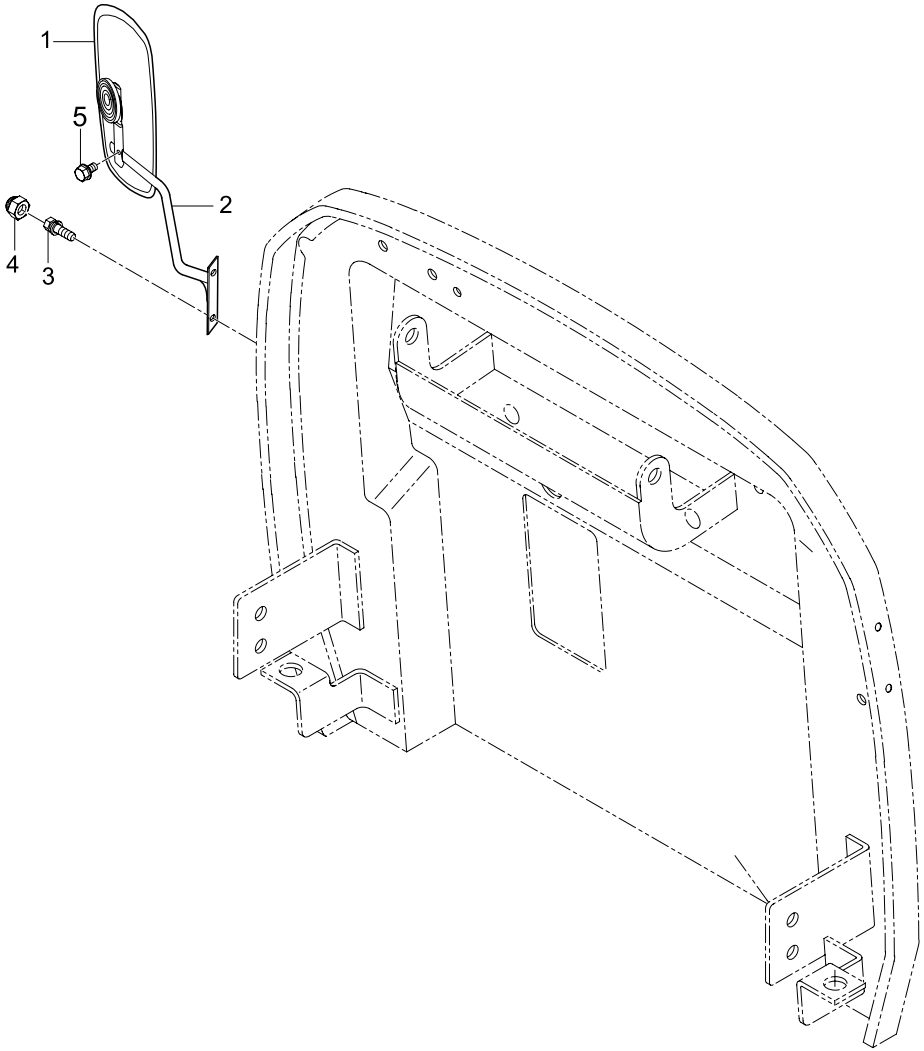

REF. NO	PART. NO	DESCRIPTION	Q'TY								I.C	REMARK
			CK20J-EN	CK20HJ-EN	CK20J-AU	CK20HJ-AU						
01	T2611-87821	MIRROR, REAR VIEW	1	1	1	1						
01	T2611-87822	MIRROR, REAR VIEW	1	1	1	1						
02	T2351-81541	BAR, REAR VIEW MIRROR (RH)	1	1	1	1						
02	T2351-81542	BAR, REAR VIEW MIRROR (RH)	1	1	1	1						
03	01123-50816	BOLT	2	2	2	2						
04	T4815-93211	CAP, NUT	2	2	2	2						
05	T4625-55431	BOLT, FLANGE	1	1	1	1						

T980 PARKING BRAKE GROUP

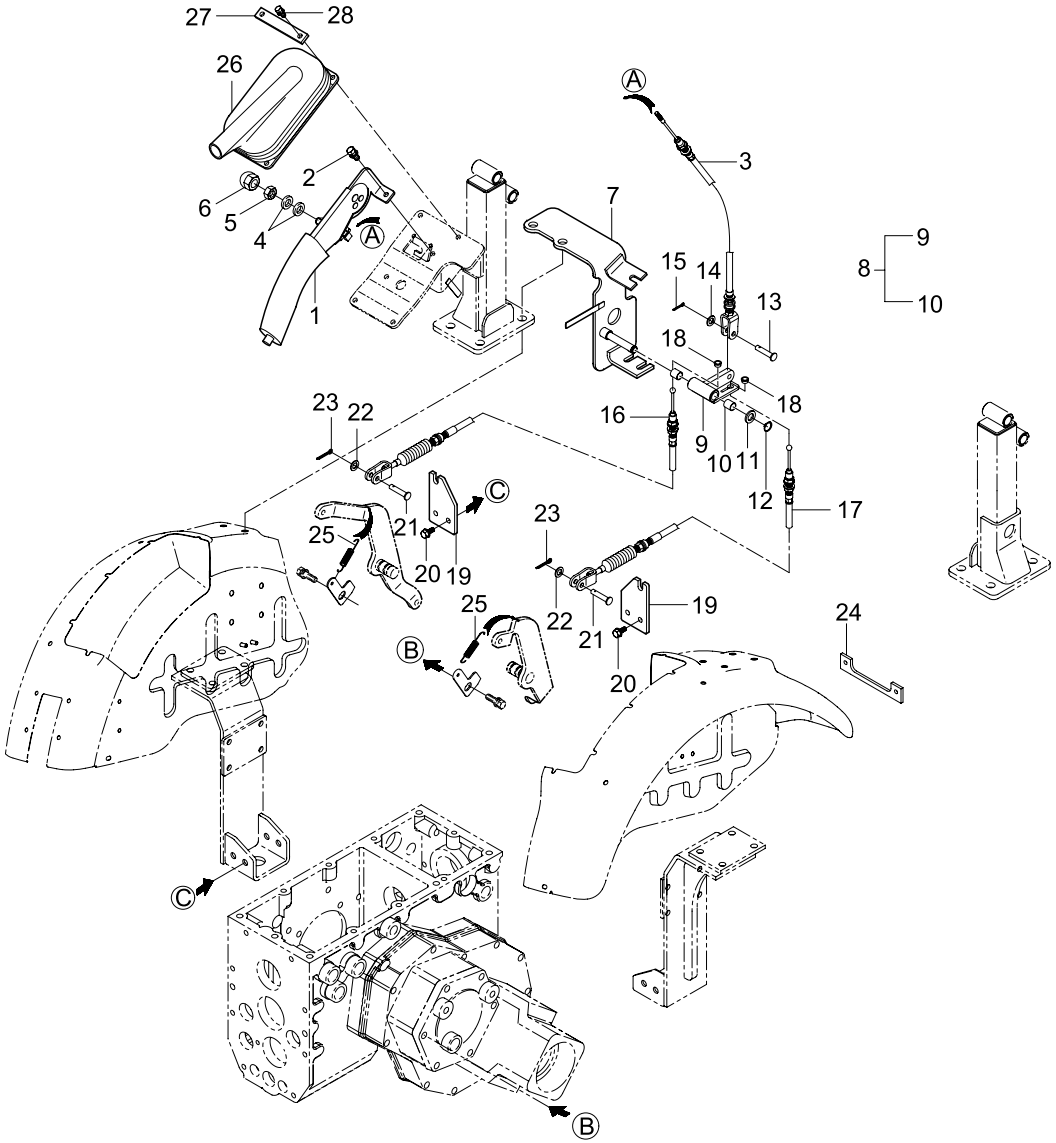

REF. NO	PART. NO	DESCRIPTION	Q'TY								I.C	REMARK
			CK20-EU	CK20-NL	CK20J-NL	CK20J-IT	CK20J-EN	CK20-SP	CK20J-SP	CK20J-FR		
01	T4810-65412	PARKING BRAKE ASS'Y	1	1	1	1	1	1	1	1		
01	T4815-65511	PARKING BRAKE ASS'Y	1	1	1	1	1	1	1	1		
02	01123-50825	BOLT	2	2	2	2	2	2	2	2		
03	T2611-65432	WIRE, PARKING BRAKE	1	1	1	1	1	1	1	1		
03	T2351-65431	WIRE, PARKING BRAKE	1	1	1	1	1	1	1	1		
04	04013-50060	WASHER, PLAIN	2	2	2	2	2	2	2	2		
05		NUT	1	1	1	1	1	1	1	1		
06		CAP, NUT	1	1	1	1	1	1	1	1		
07	T2351-97313	BRACKET 1, PARKING BRAKE	1	1	1	1	1	1	1	1		
08	T2351-97322	PARKING BRAKE BRACKET ASS'Y	1	1	1	1	1	1	1	1		
09		BRACKET, PARKING BRAKE	1	1	1	1	1	1	1	1		
10	08511-01215	BUSHING, DU	2	2	2	2	2	2	2	2		
11	04013-50120	WASHER, PLAIN	1	1	1	1	1	1	1	1		
12	04612-00120	RING, SNAP	1	1	1	1	1	1	1	1		
13	05112-50825	PIN, JOINT	1	1	1	1	1	1	1	1		
14	04012-50080	WASHER, PLAIN	1	1	1	1	1	1	1	1		
15	05511-50125	PIN, SPLIT	1	1	1	1	1	1	1	1		
16	T2351-97331	WIRE 1, PARKING BRAKE	1	1	1	1	1	1	1	1		
17	T2351-97371	WIRE 3, PARKING BRAKE	1	1	1	1	1	1	1	1		
18	T4682-55801	GROMMET (ACCEL)	2	2	2	2	2	2	2	2		
19	T2351-97351	BRACKET 3, PARKING BRAKE	2	2	2	2	2	2	2	2		
20	01133-51020	BOLT	4	4	4	4	4	4	4	4		
21	05112-50825	PIN, JOINT	2	2	2	2	2	2	2	2		
22	04012-50080	WASHER, PLAIN	2	2	2	2	2	2	2	2		
23	05511-50125	PIN, SPLIT	2	2	2	2	2	2	2	2		

REF. NO	PART. NO	DESCRIPTION	Q'TY								I.C	REMARK
			CK20-EU	CK20-NL	CK20J-NL	CK20J-IT	CK20J-EN	CK20-SP	CK20J-SP	CK20J-FR		
24	T2351-97382	BRACKET, CABLE HOLDER	1	1	1	1	1	1	1	1		
25	41182-4654-1	SPRING	2	2	2	2	2	2	2	2		
26	T2351-76741	BOOT, PARKING BRAKE	1	1	1	1	1	1	1	1		
27	T4620-65481	PLATE	2	2	2	2	2	2	2	2		
28	01023-50616	BOLT	4	4	4	4	4	4	4	4		

T990 WORKING LIGHT GROUP (Option)

CK20,CK20J,CK20H,CK20HJ

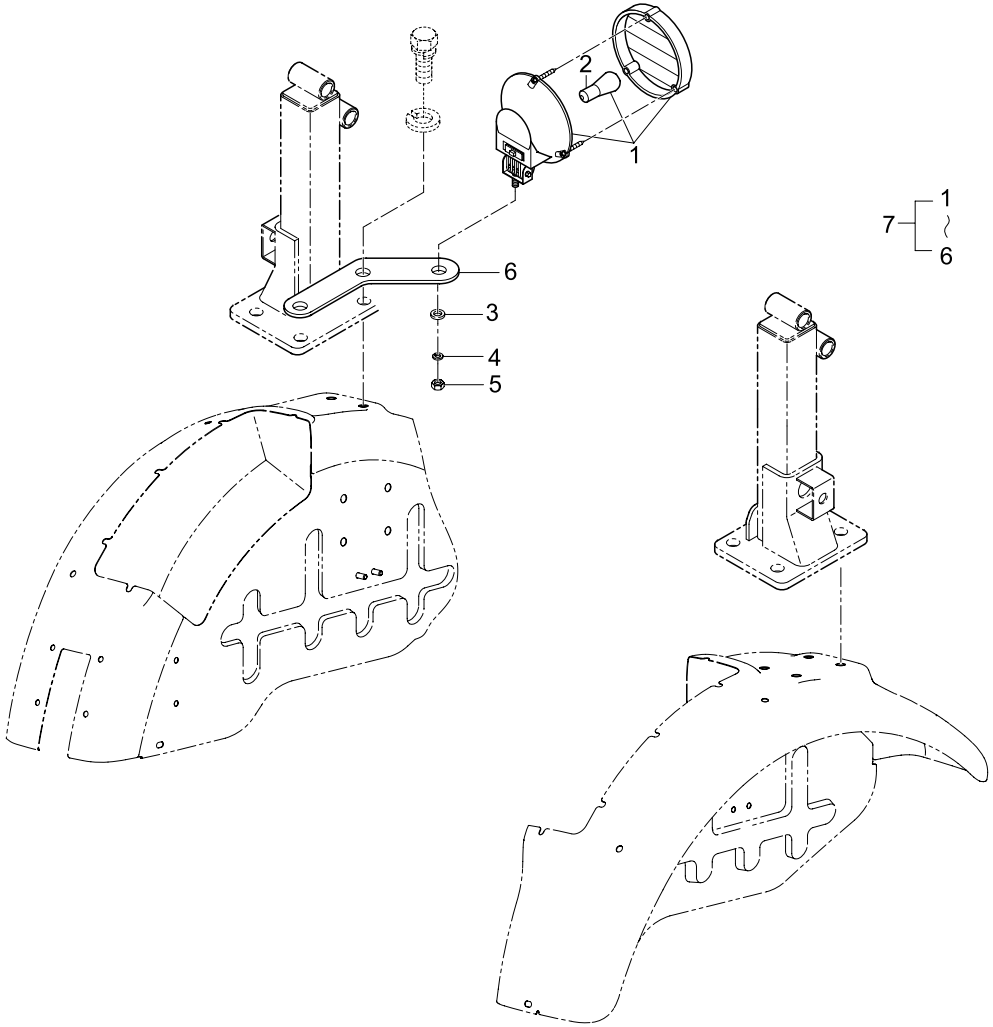

CK20-EU,CK20J-EU,CK20H-EU,CK20HJ-EU

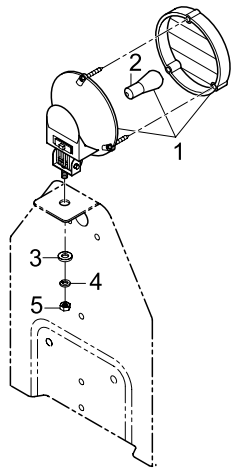

REF. NO	PART. NO	DESCRIPTION	Q'TY								I.C	REMARK
			CK20	CK20J	CK20H	CK20HJ	CK20-EU	CK20J-EU	CK20H-EU	CK20HJ-EU		
01	T2350-46611	WORKING LIGHT ASS'Y	1	1	1	1	1	1	1	1		
02	56713-4172-3	BULB (12V 21W)	1	1	1	1	1	1	1	1		
03	04013-50080	WASHER, PLAIN	1	1	1	1	1	1	1	1		
04	04512-50080	WASHER, SPRING	1	1	1	1	1	1	1	1		
05	02114-50080	NUT	1	1	1	1	1	1	1	1		
06	T2350-46621	SUPPORT, WORKING LIGHT	1	1	1	1						Option
07	T2350-B0030	WORKING LIGHT KIT	1	1	1	1						

T1020 SUNSHADE GROUP (Option)

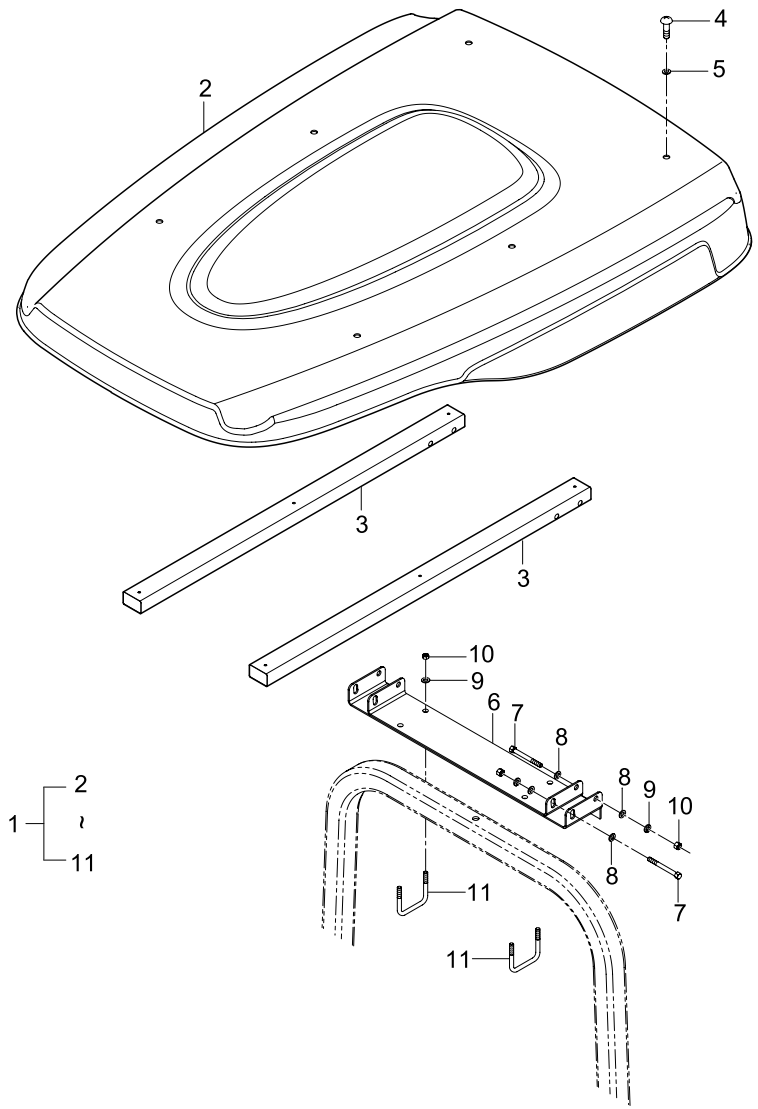

REF. NO	PART. NO	DESCRIPTION	Q'TY								I.C	REMARK
			CK20	CK20J	CK20H	CK20HJ	CK20-EU	CK20J-EU	CK20H-EU	CK20HJ-EU		
01	T2350-85102	SUNSHADE ASS'Y	1	1	1	1	1	1	1	1		
02	T2350-85112	SUNSHADE	1	1	1	1	1	1	1	1		
03	T2350-85121	PIPE	2	2	2	2	2	2	2	2		
04	38240-1883-1	SCREW	6	6	6	6	6	6	6	6		
05	04015-50050	WASHER,PLAIN	6	6	6	6	6	6	6	6		
06	T2350-85131	SUPPORT	1	1	1	1	1	1	1	1		
07	01173-51075	BOLT	4	4	4	4	4	4	4	4		
08	04013-50100	WASHER,PLAIN	12	12	12	12	12	12	12	12		
09	04512-50100	WASHER, SPRING	8	8	8	8	8	8	8	8		
10	02176-50100	NUT	8	8	8	8	8	8	8	8		
11	T2350-85141	U-BOLT	2	2	2	2	2	2	2	2		