TABLE OF CONTENTS

[ENGINE]

3A165LX-E010	CYLINDER BLOCK GROUP	1
3A150E-E020	OIL PAN GROUP	3
3A165LW-E030	CYLINDER HEAD GROUP	4
3A165LXB-E030	CYLINDER HEAD GROUP	5
3A150LX-E040	GEAR CASE GROUP	6
3A165-E050	MAIN BEARING CASE GROUP	8
3A165-E080	VALVE ROCKER ARM GROUP	9
3A165-E090	CYLINDER HEAD COVER GROUP	10
3A165LX-E090	CYLINDER HEAD COVER GROUP	11
3A165-E100	CAMSHAFT GROUP	12
3A165LW-E100	CAMSHAFT GROUP	13
3A165C-E110	PISTON & CRANKSHAFT GROUP	14
3A150D-E120	FLYWHEEL GROUP	16
3A150E-E120	FLYWHEEL GROUP	18
3A165A-E130	NOZZLE HOLDER GROUP	20
3A150E-E140	FUEL CAMSHAFT GROUP	22
3A150LW-E140	FUEL CAMSHAFT GROUP	24
4B243-E150	SPEED CONTROL LEVER GROUP	26
3A165LXB-E160	ENGINE STOP LEVER GROUP	28
4B243LX-E160	ENGINE STOP LEVER GROUP	30
3A150LX-E170	GROUP,GOVERNOR	33
3A150LX-E180	WATER PUMP GROUP	34
3A165LXB-E180	WATER PUMP GROUP	35
3A150E-E190	WATER HOSE GROUP	37
3A165LXB-E190	WATER HOSE GROUP	38
3A150LX-E200	ALTERNATOR GROUP	39
3A165LXB-E200	ALTERNATOR GROUP	40
3A150E-E220	MANIFOLD GROUP	41

[FRONT AXLE]

CK30M-T510A	FRONT AXLE SUPPORT GROUP	42
CK30M-T520A	FRONT DIFF SYSTEM GROUP	43
CK30M-T530A	BEVEL PINION SHAFT GROUP	45
CK30M-T540A	DIFF GEAR SHAFT GROUP	47
CK30M-T550A	FRONT AXLE CASE GROUP	48
CK30M-T560A	FRONT AXLE GROUP	50
CK30M-T585B	STEERING CYLINDER GROUP	51
CK30H-T610A	PROPER SHAFT GROUP	52
CK30M-T610A	PROPER SHAFT GROUP	53

[TRANSMISSION]

CK30H-T100A	CLUTCH GROUP	54
CK30M-T100A	CLUTCH GROUP	55

CK30H-T110A	CLUTCH LEVER GROUP	57
CK30M-T110A	CLUTCH LEVER GROUP	58
CK30H-T130A	CLUTCH HOUSING 1 GROUP	59
CK30M-T130A	CLUTCH HOUSING 1 GROUP	60
CK30M-T140A	CLUTCH HOUSING 2 GROUP	61
CK30H-T150A	HST CASE GROUP	62
CK30H-T160A	MID CASE GROUP	63
CK30M-T160A	MID CASE GROUP	64
CK30H-T170A	TRANSMISSION CASE GROUP	65
CK30ME-T170A	TRANSMISSION CASE GROUP	67
CK30H-T180A	MAIN SHAFT GROUP	69
CK30H-T190A	HST OUTPUT SHAFT GROUP	70
CK30M-T200A	SHUTTLE SYSTEM GROUP	71
CK30M-T210A	SHAFT 1 GROUP	73
CK30M-T220A	SHAFT 2 GROUP	74
CK30H-T230A	SPEED SHIFT FORK GROUP	76
CK30M-T230A	SPEED SHIFT FORK GROUP	78
CK30H-T240A	PTO DRIVE SHAFT GROUP	79
CK30M-T240A	PTO DRIVE SHAFT GROUP	80
CK30H-T250A	PTO SHAFT GROUP	81
CK30M-T250A	PTO SHAFT GROUP	83
CK30M-T260A	MID PTO SHAFT GROUP	86
CK30M-T265B	COVER GROUP	87
CK30H-T270A	SPRIAL BEVEL GEAR GROUP	88
CK30M-T270A	SPRIAL BEVEL GEAR GROUP	89
CK30H-T280A	FRONT DRIVING GEAR GROUP	90
CK30M-T280A	FRONT DRIVING GEAR GROUP	91
CK30M-T290A	SHUTTLE FORK GROUP	92
CK30M-T310A	MAIN SHIFT FORK GROUP	93
CK30H-T330A	SPEED SHIFT FORK GROUP	95
CK30M-T330A	SPEED SHIFT FORK GROUP	97
1-30ME-T345A	AUX SPEED SHIFT LEVER GROUP	98
CK30H-T360A	HST CONTROL 1 GROUP	99
1-30H-T395A	PTO SHIFT LEVER GROUP	101
CK30H-T420A	FRONT DRIVE FORK GROUP	102
CK30M-T420A	FRONT DRIVE FORK GROUP	103
CK30M-T440A	REAR DIFF SYSTEM GROUP	104
CK30H-T450A	DIFF LOCK FORK GROUP	106
CK30M-T450A	DIFF LOCK FORK GROUP	107
CK30M-T460A	BRAKE CASE GROUP	108
CK30ME-T460A	BRAKE CASE GROUP	110
CK35M-T460A	BRAKE CASE GROUP	112
CK30M-T480A	REAR AXLE GROUP	114
1-30HE-T1055A	MID PTO GROUP	116

[HYDRAULIC]

CK35H-T350A	ASSY,HST GROUP	119
CK35HE-T350A	ASSY,HST GROUP	123
CK35H-T360A	HST CONTROL_1 GROUP	127
CT230-T360A	HST CONTROL 1 GROUP	129
CK30H-T370A	HST IN HYDRAULIC LINE GROUP	131
CK30M-T580A	STEERING CYLINDER GROUP	132
CK30H-T590A	POWER STEERING CYLINDER GROUP	134
CK30M-T590A	POWER STEERING GROUP	135
CK30HE-T620-2A	HYDRAULIC CYLINDER GROUP	136
CK30ME-T620-2A	HYDRAULIC CYLINDER GROUP	137
CK30ME-T630-2A	HYDRAULIC CYLINDER BODY GROUP	138
CK30M-T640A	HYDRAULIC LIFT ARM GROUP	139
D360-T640A	HYDRULIC SYSTEM 2 GROUP	140
CK30ME-T650A	HYDRULIC SYSTEM 1 GROUP	143
D360-T650A	TOP LINK BRACKET GROUP	144
CK30M-T680A	MAIN DISTRIBUTOR VALVE GROUP	145
CK30H-T690A	HST CONTROL 2 GROUP	148
CT230H-T690A	HST CONTROL 2 GROUP	151
CK30H-T700A	HST CONTROL 3 GROUP	155
CK30M-T710A	GEAR PUMP GROUP	157
CK30H-T720-1A	INLET TUBE GROUP	159
CK30M-T720-1A	INLET TUBE GROUP	161
CK30H-T725B	HYDRAULIC(1)GROUP	163
CK30MEU-T725B		165
CK30H-T735A	HST EXTERNAL HYDRAULIC LINE GROUP	167
CK30H-T750A	JOYSTICK VALVE GROUP	170
CK30M-T750A	JOYSTICK VALVE GROUP	174
CK35H-T750A	JOYSTICK VALVE GROUP	178
CK35M-T750A	JOYSTICK VALVE GROUP	182
CK30M-T760-2A	REMOTE HYDRAULIC VALVE GROUP	186
CK30H-T765-1A	DETENT DOUBLE ACTING VALVE GROUP	188
CK30M-T765-1A	DETENT DOUBLE ACTING VALVE GROUP	189
CK30M-T770A	DOWN SPEED CONTROL GROUP	191

[CHASSIS]

CK30M-T010A	AIR CLEANER GROUP	192
CK35M-T010A	AIR CLEANER GROUP	193
CK30M-T020A	MUFFLER GROUP	194
CK350-T020A	MUFFLLER GROUP	195
CK30M-T030A	RADIATOR GROUP	196
CK35-T030A	RADIATOR GROUP	198
CK30H-T120A	CLUTCH PEDAL GROUP	201
CK30M-T120A	CLUTCH PEDAL GROUP	202
CK30ME-T300A	SHUTTLE LEVER GROUP	203

CK30M-T320A	MAIN SHIFT LEVER GROUP	205
CK30H-T340A	AUX SPEED SHIFT LEVER GROUP	206
CK30M-T340A	AUX SPEED SHIFT LEVER GROUP	207
CK30HEU-T345B	1	208
CK30MEU-T345B	1	210
CK30M-T390A	PTO SHIFT LEVER GROUP	212
CK30M-T430A	FRONT DRIVE LEVER GROUP	213
CK30H-T470A	BRAKE PEDAL GROUP	214
CK30ME-T470A	BRAKE PEDAL GROUP	217
CK30ME-T475A	PARKING BRAKE GROUP	219
CK30M-T500A	FRONT AXLE FRAME GROUP	221
CK35H-T500A	FRONT AXLE FRAME GROUP	223
CK35M-T500A	FRONT AXLE FRAME GROUP	225
CK30M-T600A	FRONT AXLE BRACKET GROUP	227
CK30M-T730A	OIL INLET TUBE GROUP	229
CK30H-T770A	DOWN SPEED CONTROL GROUP	230
CK30M-T780-2A	POSITION DRAFT CONTROL LEVER GROUP	231
CK30ME-T790A	THREE POINT LINK SYSTEM 1GROUP	232
CK30E-T795A	THREE POINT LINK SYSTEM 2GROUP	235
CK30M-T795A	THREE POINT LINK SYSTEM 2GROUP	236
CK30ME-T805A	SWING DRAWBAR GROUP	238
CK30M-T810A	BONNET 1 GROUP	239
CK30M-T820A	BONNET 2 GROUP	240
CK35-T820A	BONNET 2 GROUP	243
CK30M-T830A	BONNET 3 GROUP	246
CK35M-T830A	BONNET 3 GROUP	247
CK30H-T840A	FRAME GROUP	248
CK30M-T840A	FRAME GROUP	252
CK30M-T850A	FUEL TANK GROUP	257
CK30M-T860A	ACCELERATOR GROUP	261
CT230-T860A	ACCELERATOR GROUP	263
CK30HE-T870A	INSTRUMENT COVER GROUP	264
CK30HE-T875A	INSTRUMENT COVER GROUP	265
CK30ME-T875A	INSTRUMENT COVER GROUP	266
CK30M-T880-1A	FENDER GROUP	267
CK30HE-T890A	SEAT FLOOR GROUP	269
CK30ME-T890A	SEAT FLOOR GROUP	271
CK35HE-T895A	SEAT FLOOR GROUP	274
CK35ME-T895A	SEAT FLOOR GROUP	276
CK30HE-T900-1A	STEP GROUP	278
CK30ME-T900-1A	STEP GROUP	280
CK30ME-T910B	SEAT GROUP	282
CK2810HEU-T915A	LABEL GROUP	283
CK35ME-T915B	SEAT GROUP	284
CK35HE-T970-1A	LABEL GROUP	285

CK35ME-T970-1A LABEL GROUP. 289
CK35ME-T980A ROPS GROUP. 293
CK30ME-T990A TOWING HOOK GROUP. 294

[ELECTRICAL]
CK30ME-T920A BATTERY GROUP. 295
CK35HE-T920A BATTERY GROUP. 296
CK35ME-T930A ELECTRICITY SYSTEM 1GROUP. 297
X10.30ME-T930A ELECTRICITY SYSTEM 1GROUP. 298
X10.30HE-T940A ELECTRICITY SYSTEM 2 GROUP. 299
X10.30ME-T940A ELECTRICITY SYSTEM 2 GROUP. 301
CK30HE-T940-1A ELECTRICITY SYSTEM 2 GROUP. 303
CK30ME-T940-1A ELECTRICITY SYSTEM 2 GROUP. 306
CK35ME-T950A ELECTRICITY SYSTEM 3 GROUP. 309
X10.30ME-T950A ELECTRICITY SYSTEM 1GROUP. 312
CK30ME-T960-1A LIGHT LH GROUP. 314
CT230-T1050A WORKING LIGHT GROUP. 317

[CABIN]
CK30C-T9000A CABIN GROUP. 318
CK30C-T9001A CABIN GROUP. 321
CK30C-T9010A MOUNTING GROUP. 324
CK30C-T9020A FRONT GLASS GROUP. 326
CK30C-T9030A DOOR GROUP. 329
CK30C-T9040A REAR GLASS GROUP. 331
CK30C-T9050A ROOF GROUP. 333
CK30C-T9060A ELETRICAL GROUP. 335
CK30C-T9100A SOUNDPROOF GROUP. 337
CK30C-T9101A SOUNDPROOF GROUP. 339
CK20C-T9110A BEACON LIGHT GROUP. 341
CK20C-T9120A WORKING LIGHT GROUP. 342
CK20C-T9130A CD PLATER GROUP. 343

[OPTION]
CK30M-T490A REAR WHEEL GROUP. 344
CK30ME-T490A REAR WHEEL GROUP. 345
DK45HSE-T495A REAR WHEEL GROUP. 346
CK30M-T570A FRONT WHEEL GROUP. 347
CK30ME-T570A FRONT WHEEL GROUP. 348
CK30M-T767-4A REMOTE HYDRAULIC LEVER GROUP. 349
CK30E-T1000A TURF TIRES GROUP. 351
CK30ME-T1020A PIN SOCKET GROUP. 352
CK30ME-T1030A REAR VIEW MIRROR GROUP. 353
CK30M-T1040A SUN ROOF GROUP. 354
CK30M-T1050A WORKING LIGHT A GROUP. 355

CK30E-T1055B MID PTO GROUP. 356
EX40-T1065C FRONT WEIGHT GROUP. 359
EX40-T1075B REAR WEIGHT GROUP. 360
EX40-T1075C Rear Weights Group(Option). 361
CT230-T1115B FRONT & REAR WHEEL GROUP. 362
CK30E-T2000B TOWING HOOK GROUP. 363

INDEX 1 364
INDEX 2 381
INDEX 3 384

3A165LX-E010 CYLINDER BLOCK GROUP

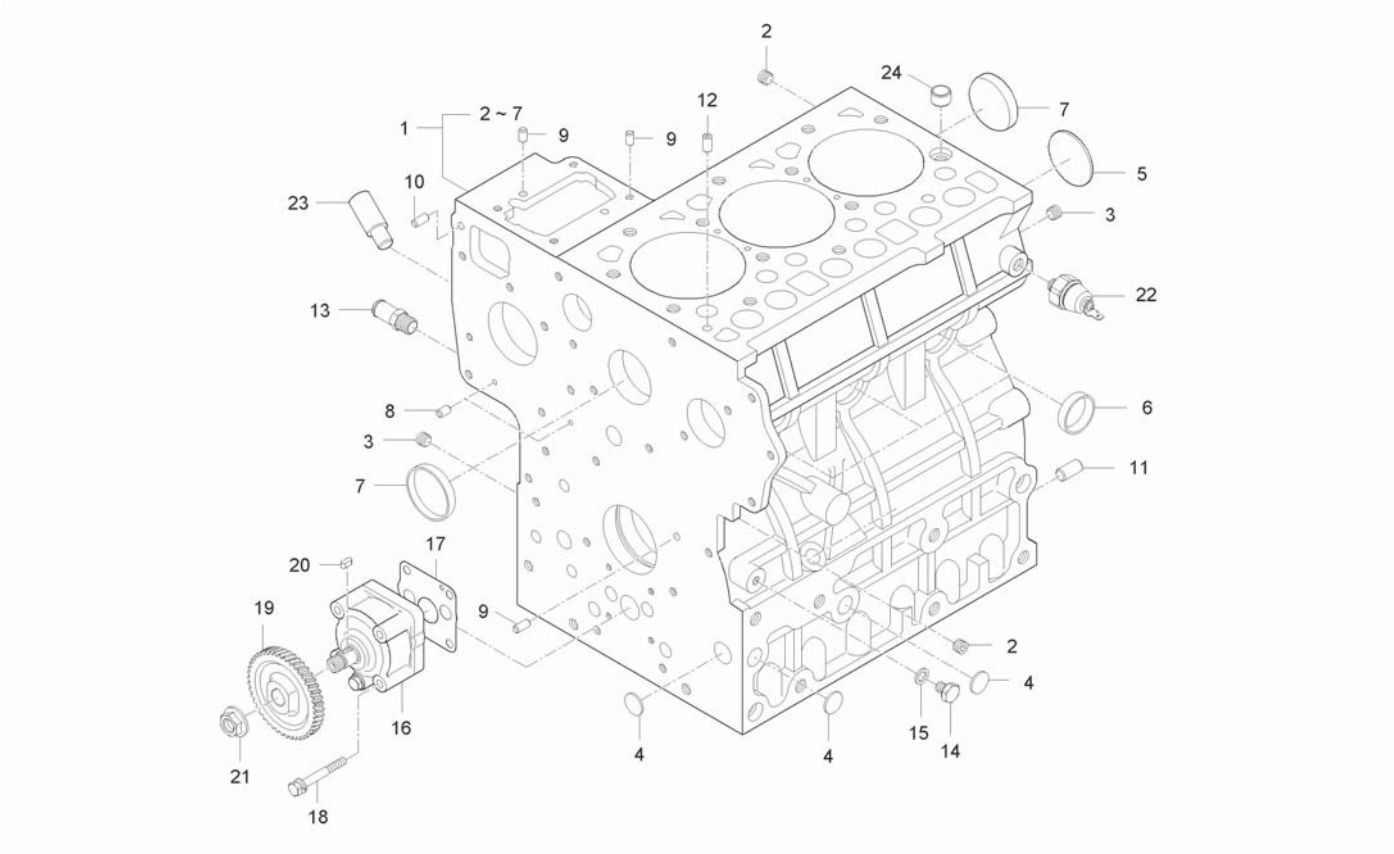

A : CK35-EU , B : CK35H-EU

No.	Part Number	Desciption	Q'TY A	Q'TY B	Q'TY C	Q'TY D	Q'TY E	I.C	Remark
1	E5640-A0011	CYLINDER BLCOK ASSY	1	1					
1	E5640-A0013	CYLINDER BLOCK ASSEMBLY	1	1				<----	
2	E5900-96021	PLUG	5	5					
3	E5900-96031	PLUG	2	2					
4	06311-75018	PLUG	3	3					
5	06311-75045	PLUG	1	1					T2*48*48
6	15221-0338-3	CAP	5	5					
7	15221-0339-2	CAP	2	2					
8	05012-00408	PIN, PARALLEL	2	2					
9	05012-00609	PIN, PARALLEL	2	2					
10	05012-00612	PIN, PARALLEL	2	2					
11	05012-01018	PIN, PARALLEL	2	2					
12	15221-3365-1	PIN, TUBE	1	1					
13	E5500-73342	HOSE, COOLING WATER RETURN	1	1					
14	15221-3361-1	PLUG	1	1					
15	15021-3366-1	GASKET	1	1					
16	E6200-35012	OIL PUMP ASSY	1	1					
16	E6200-35013	OIL PUMP ASSY	1	1				<--->	
17	E5500-35154	GASKET, OIL PUMP	1	1					

----> Old replace New
<-X-> Not interchangeable
<-O-> Interchangeable with another part(s)
<---- New replace Old
<---> Interchangeable

3A165LX-E010 CYLINDER BLOCK GROUP

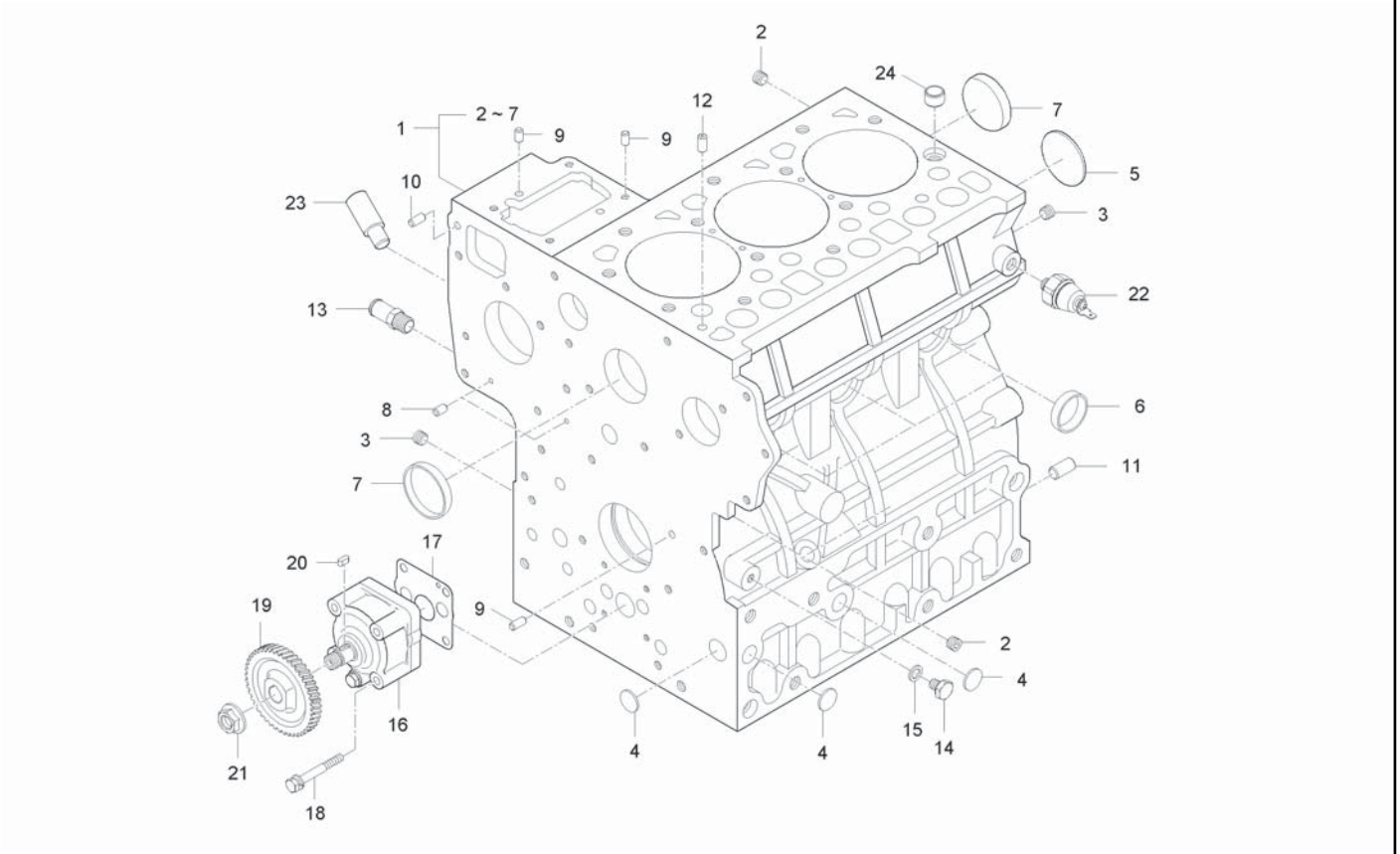

A : CK35-EU , B : CK35H-EU

No.	Part Number	Desciption	Q'TY A	Q'TY B	Q'TY C	Q'TY D	Q'TY E	I.C	Remark
18	01023-50650	BOLT, WASHER	4	4					M6*PI.0
19	19202-3566-1	GEAR, OIL PUMP DRIVE	1	1					
20	05712-00410	KEY	1	1					5*5*14
21	E6300-35681	NUT, FLANGE	1	1					
22	E5500-39013	OIL SWITCH	1	1					
23	E5752-35692	GUIDE, OIL GAUGE	1	1					
24	E6301-33812	TUBE PIN	1	1					

----> Old replace New
<-X-> Not interchangeable
<-O-> Interchangeable with another part(s)
<---- New replace Old
<---> Interchangeable

3A150E-E020

OIL PAN GROUP

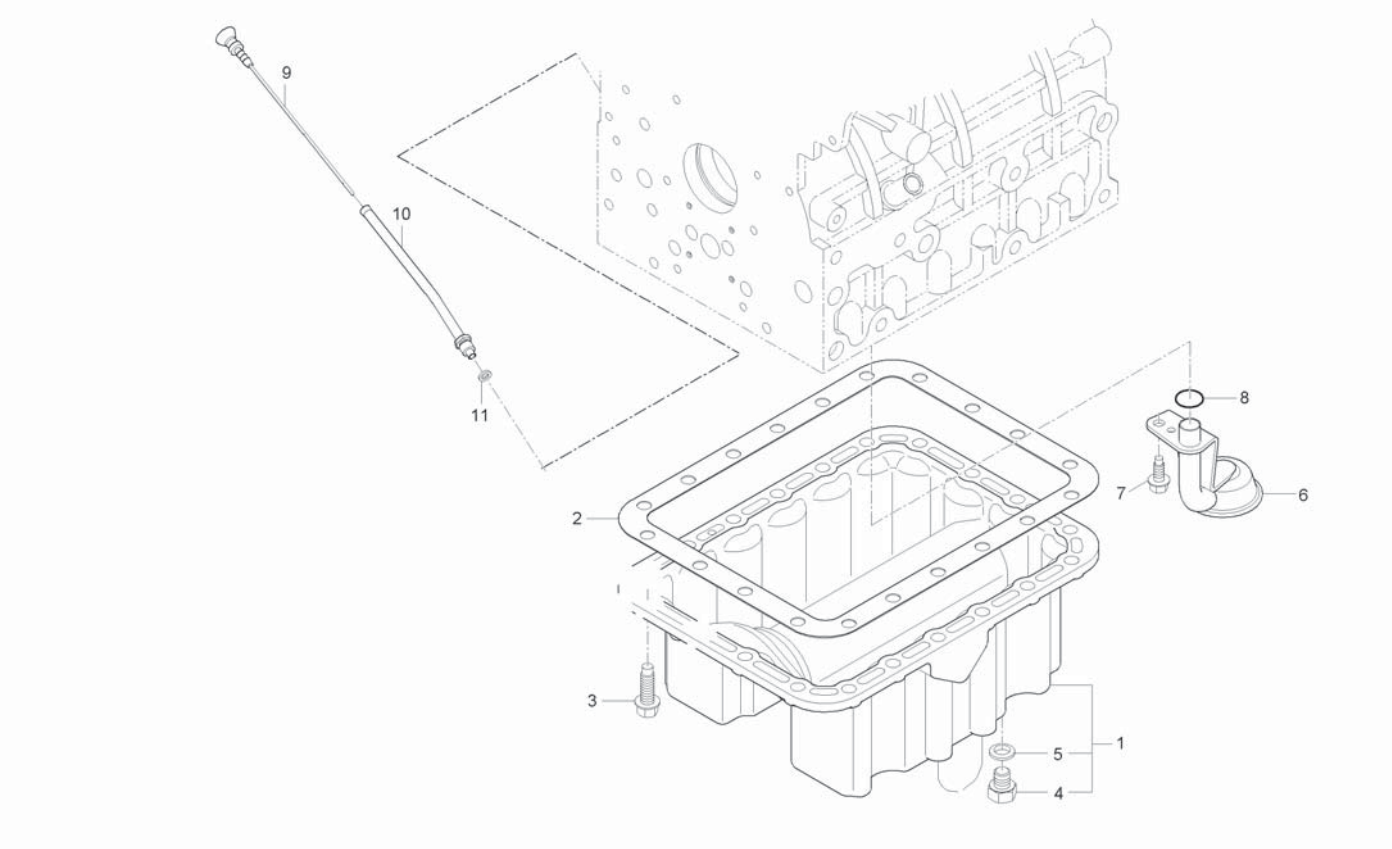

A : CK35-EU , B : CK35H-EU

No.	Part Number	Desciption	Q'TY A	Q'TY B	Q'TY C	Q'TY D	Q'TY E	I.C	Remark
1	E5800-01601	ASSY FAN,OIL	1	1					
1	E5800-01602	ASSY FAN,OIL	1	1				<----	
2	E5500-01623	GASKET, OIL PAN	1	1					
3	01674-51032	BOLT, FLANGE	20	20					
4	06331-35012	PLUG	2	2					M12*P1.25
4	15221-3375-2	PLUG, OIL DRAIN	2	2				<----	
5	04717-01200	WASHER, SEAL	2	2					
6	E6200-32113	OIL FILTER, 1	1	1					
7	01654-50820	BOLT, FLANGE WITH PIN	1	1					
8	04811-00160	O RING	1	1					DIA15.8
9	E5629-36412	OIL GAUGE	1	1					
10	E6305-36422	GUIDE PIPE, OIL GAUGE	1	1					
11	E7310-36431	PACKING	1	1					

----> Old replace New
<-X-> Not interchangeable
<-O-> Interchangeable with another part(s)
<---- New replace Old
<---> Interchangeable

3A165LW-E030 CYLINDER HEAD GROUP

(CK35-EU : HT8100001 ~ , CK35H-EU : HT8900001 ~)

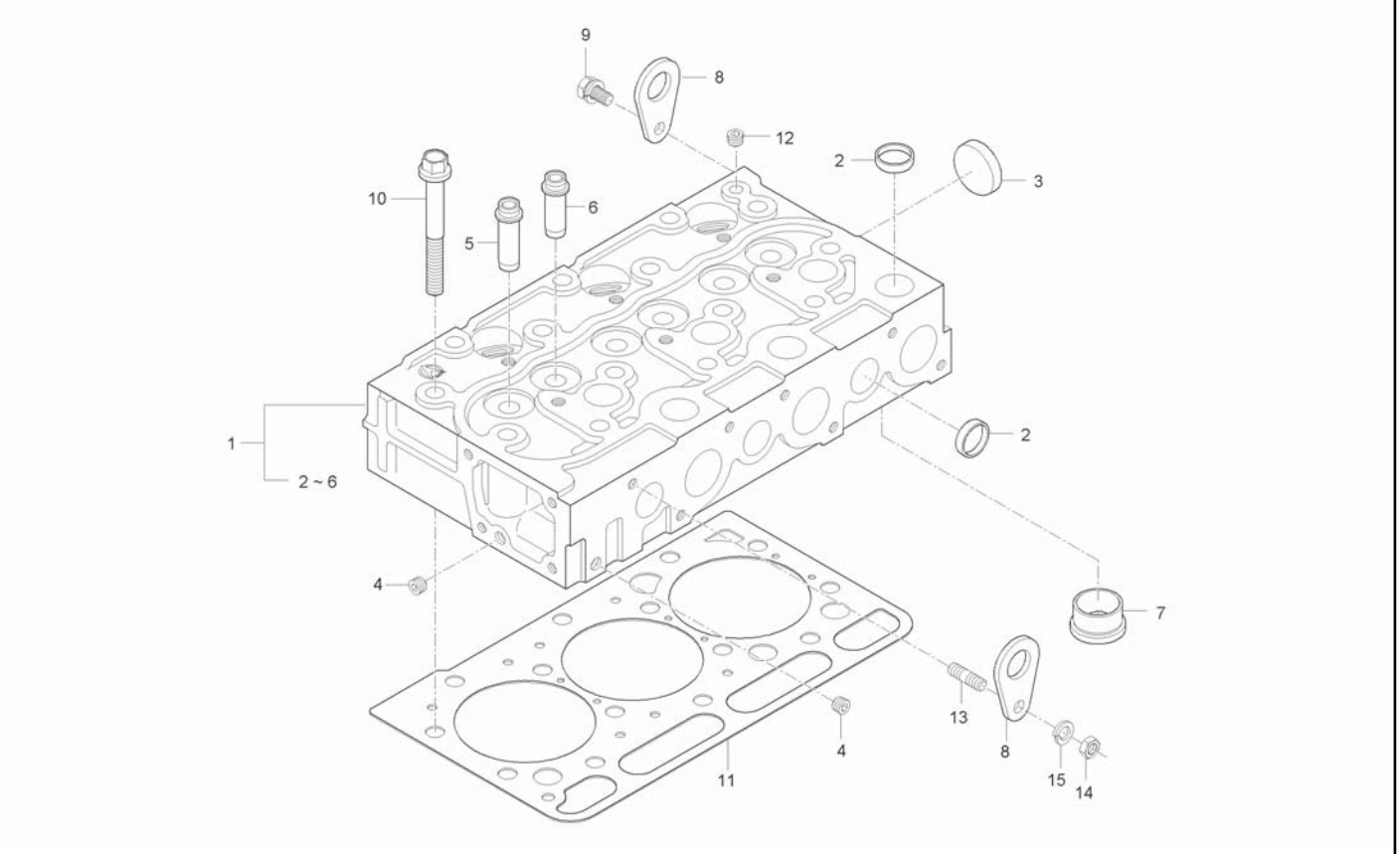

A : CK35-EU , B : CK35H-EU

No.	Part Number	Desciption	Q'TY A	Q'TY B	Q'TY C	Q'TY D	Q'TY E	I.C	Remark
1	E5603-A0301	CYLINDER HEAD TOTAL ASSY	1	1					
1	E5603-A0302	TOTAL CYLINDER HEAD ASSY	1	1				<----	
2	15221-0337-3	CAP	9	9					
3	15221-0349-3	CAP	1	1					
4	E5900-96021	PLUG	2	2					
5	E6850-13581	GUIDE, INTAKE VALVE	3	3					
6	E6850-13561	GUIDE, VALVE	3	3					
7	E6500-03142	HOT FLUG	3	3					
8	15221-0175-1	ENGINE HOOK	2	2					
9	01123-50816	BOLT, WASHER	1	1					M8*P1.25
10	E6850-03451	BOLT,HEAD	14	14					
11	E5850-03312	GASKET, CYLINDER HEAD	1	1					
12	E5900-96021	PLUG	1	1					
13	01513-50822	STUD	1	1					M8*1.25
14	02156-50080	NUT	1	1					M8XP1.25
14	02763-50080	FLANGE NUT	1	1				<--->	M8XP1.25
15	04512-50080	SPRING WASHER	1	1					M08

----> Old replace New
<-X-> Not interchangeable
<-O-> Interchangeable with another part(s)
<---- New replace Old
<---> Interchangeable

3A165LXB-E030 CYLINDER HEAD GROUP

(CK35-EU : ~ GT8100129, CK35H-EU : ~ GT8900088)

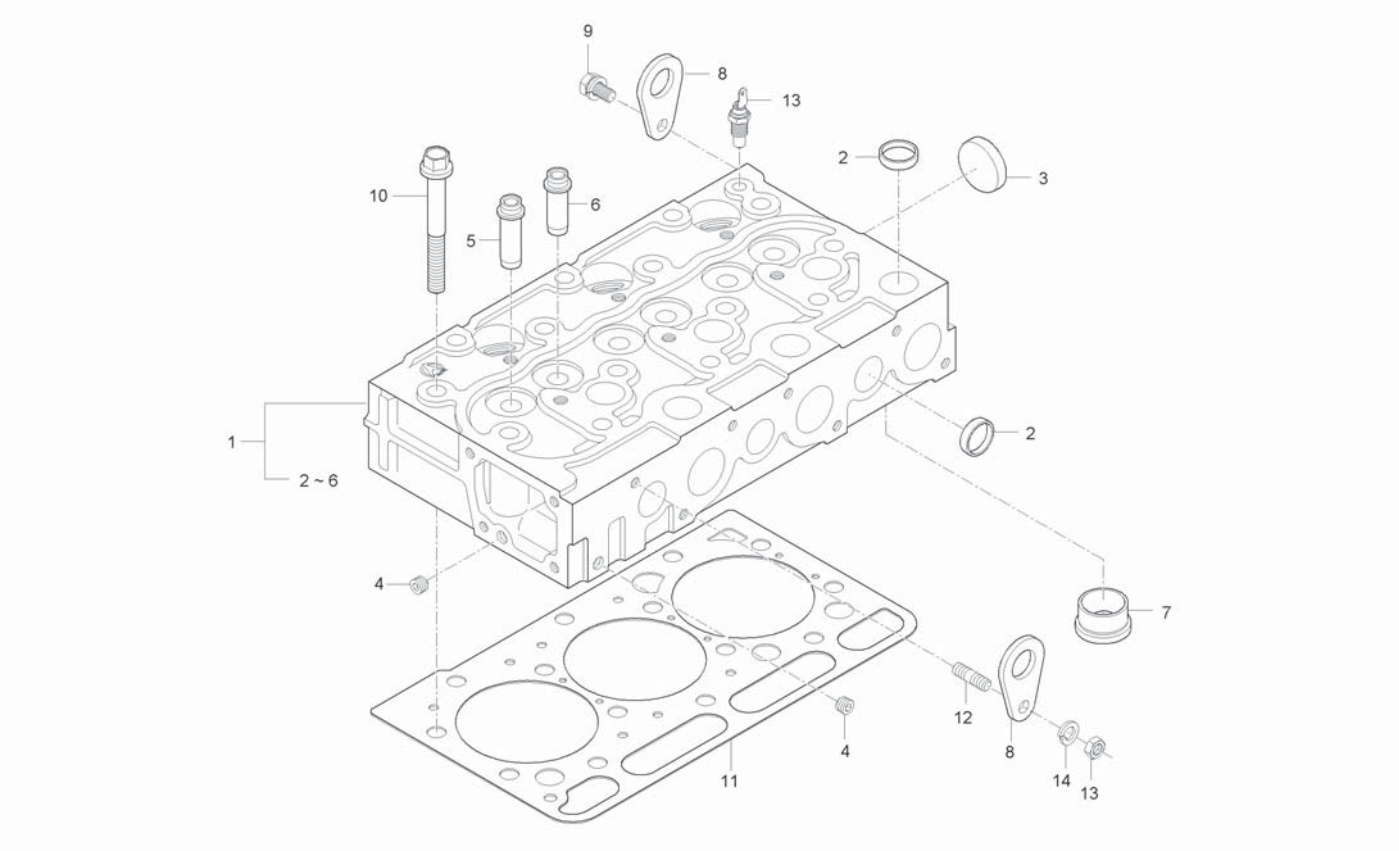

A : CK35-EU , B : CK35H-EU

No.	Part Number	Desciption	Q'TY A	Q'TY B	Q'TY C	Q'TY D	Q'TY E	I.C	Remark
1	E5600-0304A	CYLINDER HEAD ASSY	1	1					
2	15221-0337-3	CAP	9	9					
3	15221-0349-3	CAP	1	1					
4	E5900-96021	PLUG	3	3					
5	E6850-13581	GUIDE, INTAKE VALVE	3	3					
6	E6850-13561	GUIDE, VALVE	3	3					
7	E6301-03148	HOT FLUG	3	3					
8	15221-0175-1	ENGINE HOOK	2	2					
9	01123-50816	BOLT, WASHER	1	1					M8*P1.25
10	E6300-03453	BOLT, CYLINDER HEAD	14	14					
11	E5600-03315	GASKET, CYLINDER HEAD	1	1					
11	E5600-03316	GASKET, CYLINDER HEAD	1	1				<----	
11	E5850-03312	GASKET, CYLINDER HEAD	1	1				<----	
12	01513-50822	STUD	1	1					M8*1.25
13	02156-50080	NUT	1	1					M8XP1.25
14	04512-50080	SPRING WASHER	1	1					M08

----> Old replace New
<-X-> Not interchangeable
<-O-> Interchangeable with another part(s)
<---- New replace Old
<---> Interchangeable

3A150LX-E040 GEAR CASE GROUP

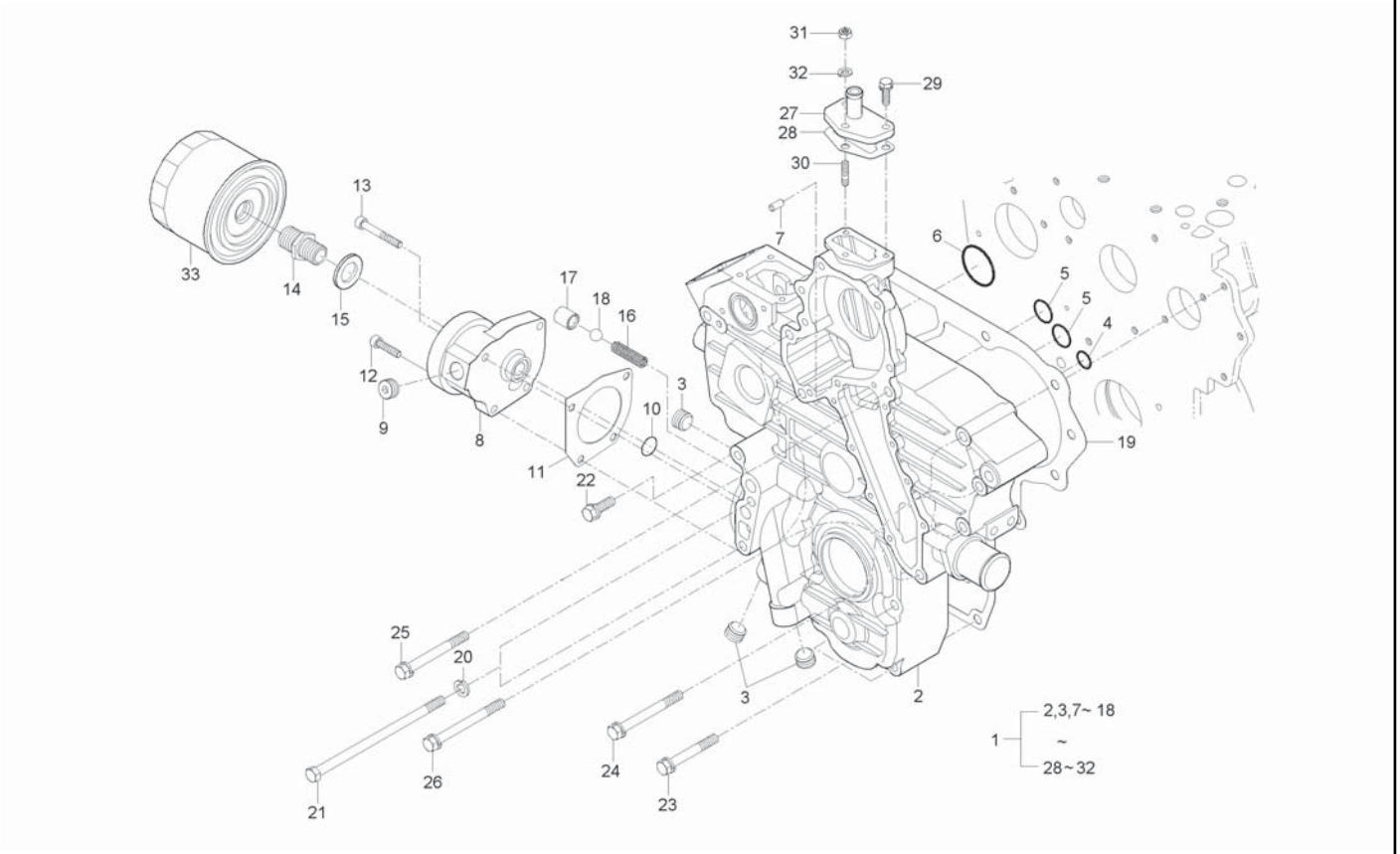

A : CK35-EU , B : CK35H-EU

No.	Part Number	Desciption	Q'TY A	Q'TY B	Q'TY C	Q'TY D	Q'TY E	I.C	Remark
1	E5627-A0024	GEAR CASE TOTAL ASSY	1	1					
1	E5627-A0025	GEAR CASE TOTAL ASSY	1	1				<----	
1	E5627-A0027	GEAR CASE TOTAL ASSY	1	1				<----	
2	E5627-04115	CASE, GEAR	1	1					
2	E5627-04116	CASE, GEAR	1	1				<----	
3	E5800-96031	PLUG	3	3					
4	04811-00150	O RING	1	1					
5	04811-00220	O RING	2	2					
6	04811-00360	O RING	1	1					
7	05012-00612	PIN, PARALLEL	2	2					
8	E5627-32313	SUPPORT, OIL FILTER	1	1					
9	E5800-96031	PLUG	1	1					
10	04811-00180	O RING	1	1					P18
11	E5627-32323	GASKET, OIL FITER SUPPORT	1	1					
12	E5627-91131	BOLT, HEXAGEN	3	3					
13	E5627-91141	BOLT, HEXAGEN	1	1					
14	15521-3229-1	TUBE, CONNECTING	1	1					
15	04011-50180	WASHER, PLAIN	1	1					T2.9
16	15241-3695-2	SPRING	1	1					

----> Old replace New
<-X-> Not interchangeable
<-O-> Interchangeable with another part(s)
<---- New replace Old
<---> Interchangeable

3A150LX-E040

GEAR CASE GROUP

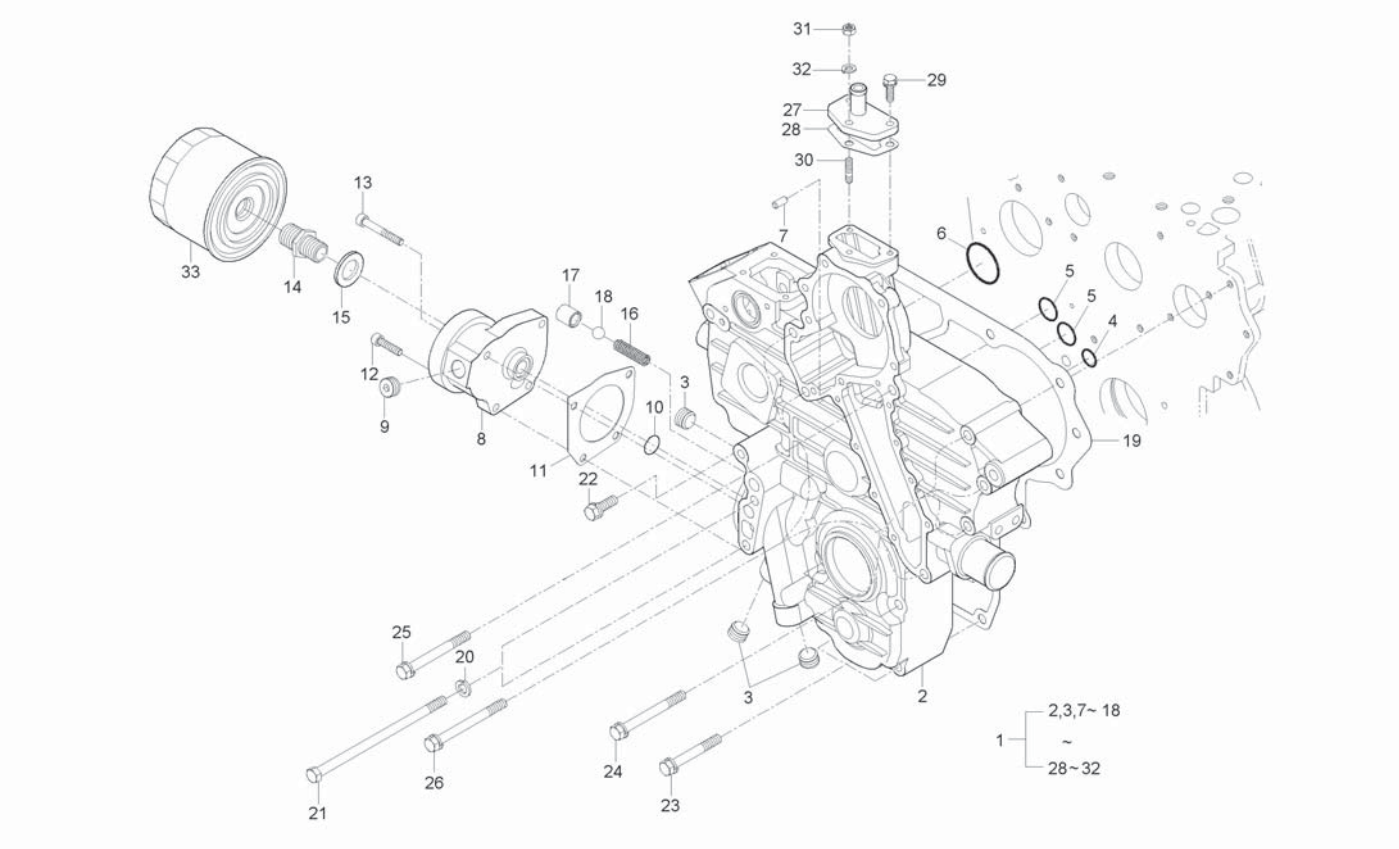

A : CK35-EU , B : CK35H-EU

No.	Part Number	Desciption	Q'TY A	Q'TY B	Q'TY C	Q'TY D	Q'TY E	I.C	Remark
17	E5500-36932	SEAT, VALVE	1	1					
18	07715-03213	STEEL BALL	1	1					13/32"(10.3188)
19	E5627-04132	GASKET, GEAR CASE	1	1					
20	04512-50080	SPRING WASHER	2	2					M08
21	01153-50802	BOLT	2 ~HT8100016	2 ~HT8900036					
21	01123-50802	BOLT	2 HT8100017~	2 HT8900037~				<-O->	
22	01123-50835	BOLT, WASHER	1	1					M8X1.25
23	01123-50860	BOLT, WASHER	2	2					M8*1.25
24	01123-50870	BOLT, WASHER	5	5					
25	01123-50875	BOLT, WASHER	2	2					
26	01123-50885	BOLT, WASHER	3	3					
27	15521-7332-1	FLANGE, COOLING WATER RETURN	1	1					
28	E5500-73332	GASKET	1	1					
29	01023-50620	BOLT, WASHER	2	2					M6*1.0
30	01513-50620	STUD	1	1					
31	02056-50060	NUT	1	1					M6*P1.0
32	04512-50060	WASHER, SPRING	1	1					M6
33	E6201-32443	OIL FILTER	1	1					

----> Old replace New
<-X-> Not interchangeable
<-O-> Interchangeable with another part(s)
<---- New replace Old
<---> Interchangeable

3A165-E050 MAIN BEARING CASE GROUP

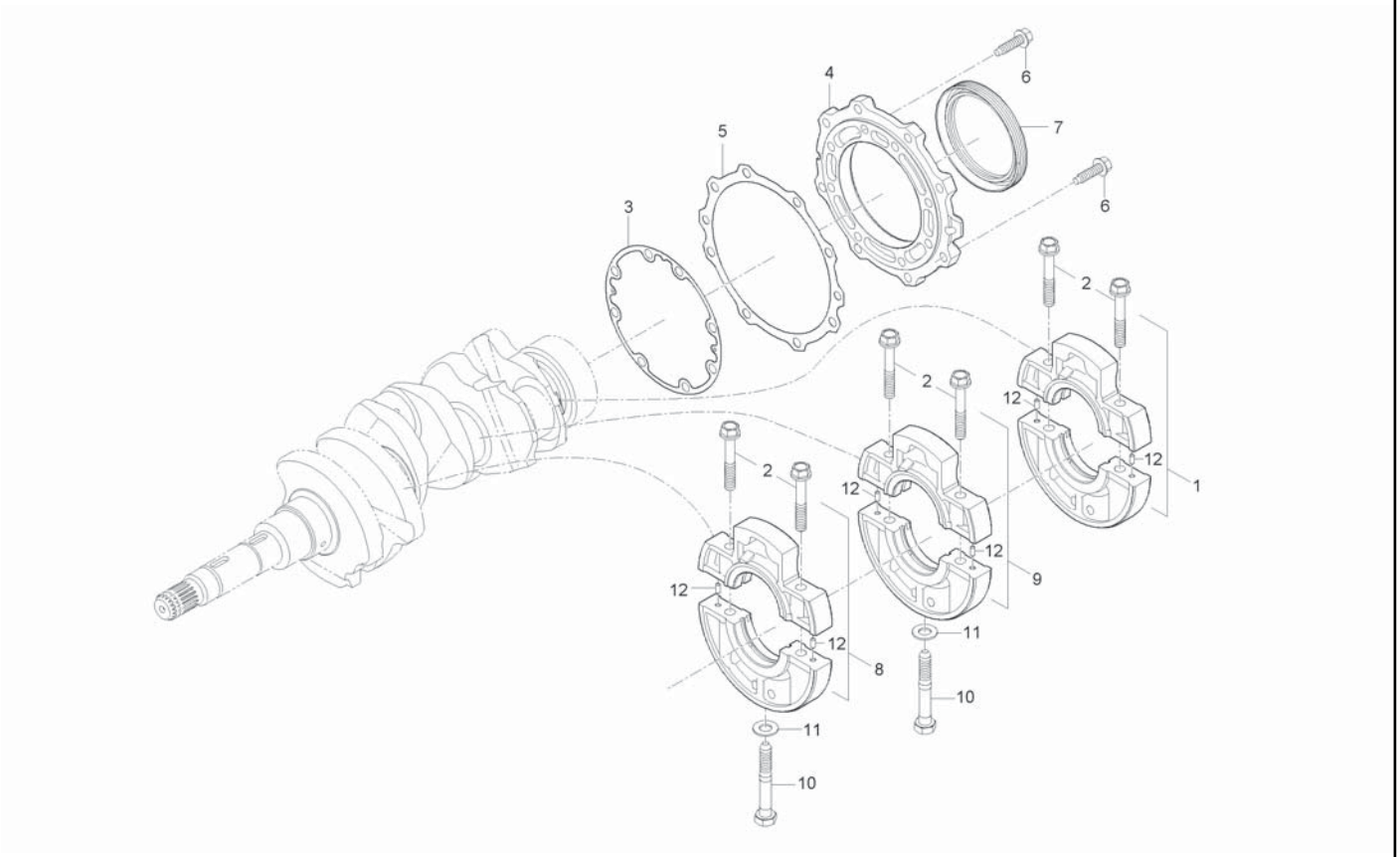

A : CK35-EU , B : CK35H-EU

No.	Part Number	Desciption	Q'TY A	Q'TY B	Q'TY C	Q'TY D	Q'TY E	I.C	Remark
1	E6300-A0033	MAIN BEARING CASE ASSY	1	1					
2	E6300-04541	BOLT 1, BEARING CASE	6	6					
2	E6300-04542	BOLT 1, BEARING CASE	6	6				<----	
3	E6300-04361	GASKET, BEARING CASE	1	1					
3	E6300-04362	GASKET, BEARING CASE	1	1				<----	
4	E6300-04811	COVER, MAIN BEARING CASE	1	1					
4	E6300-04812	COVER, MAIN BEARING CASE	1	1				<--->	
4	E6300-04813	COVER, MAIN BEARING CASE	1	1				<--->	
5	E6300-04821	GASKET, BEARING COVER CASE	1	1					
5	E6300-04822	GASKET, BEARING COVER CASE	1	1				<----	
6	01654-50830	BOLT, FLANGE WITH PIN	16	16					7T
7	E5500-04463	SEAL, OIL	1	1					
7	E5500-04464	SEAL, OIL	1	1				<--->	
8	E6300-A0043	MAIN BEARING CASE ASSY, 1	1	1					
9	E6300-A0053	MAIN BEARING CASE ASSY, 2	1	1					
10	15291-0456-2	BOLT 2, BEARING CASE	2	2					
11	15521-9402-1	WASHER	2	2					
11	04014-50100	WASHER, PLAIN	2	2				<--->	M10
12	05012-00408	PIN, PARALLEL	6	6					

----> Old replace New
<-X-> Not interchangeable
<-O-> Interchangeable with another part(s)
<---- New replace Old
<---> Interchangeable

3A165-E080 VALVE ROCKER ARM GROUP

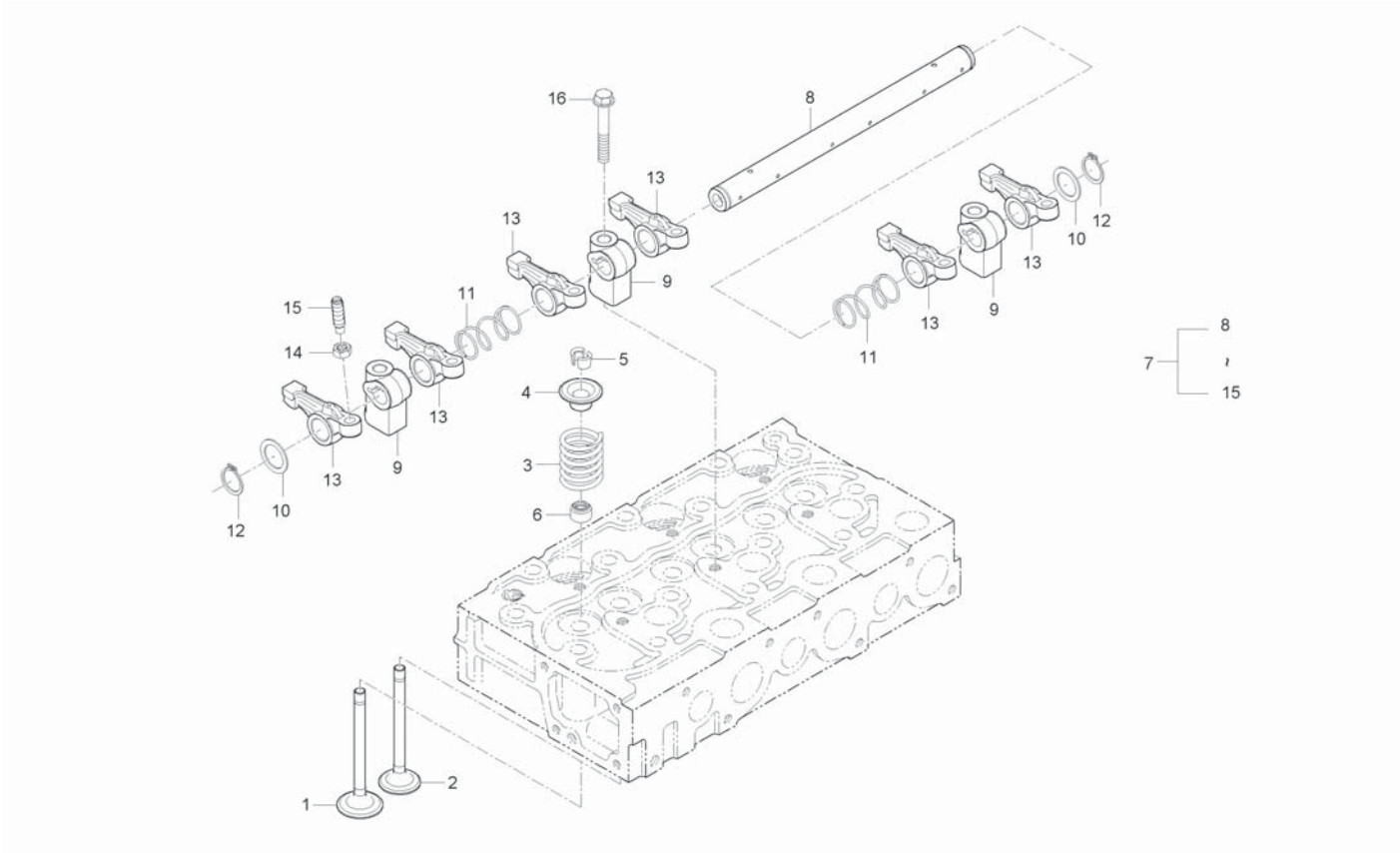

A : CK35-EU , B : CK35H-EU

No.	Part Number	Desciption	Q'TY A	Q'TY B	Q'TY C	Q'TY D	Q'TY E	I.C	Remark
1	E6301-13111	VALVE, INTAKE	3	3					
2	E6301-13121	EXHAUST VALVE	3	3					
3	15221-1324-2	SPRING, VALVE	6	6					
4	E5500-13332	RETAINER, VALVE SPRING	6	6					
5	E5500-13362	COLLET, VALVE SPRING	12	12					
5	E6403-13361	COLLET,VALVE SPRING	12	12				<--->	
6	E6301-13151	SEAL, VALVE STEM	6	6					
7	E5800-14001	ROCKER ARM SHAFT ASSY	1	1					
8	E5800-14051	ROCKER ARM SHAFT ASSY	1	1					
9	E6301-14351	SUPPORT, ROCKER ARM	3	3					
10	E6301-14431	WASHER, PLAIN	2	2					
11	E6301-14311	SPRING, ROCKER ARM	2	2					
12	04612-00190	SNAP RING	2	2					
13	E6301-14111	ARM, ROCKER	6	6					
14	15021-1424-1	NUT, ADJUSTING	6	6					
15	E5500-14232	SCREW, ADJUSTING	6	6					
16	E6510-91501	BOLT, ROCKER ARM SUPPORT	3	3					
16	E6510-91502	BOLT, ROCKER ARM SUPPORT	3	3				<----	

----> Old replace New
<-X-> Not interchangeable
<-O-> Interchangeable with another part(s)
<---- New replace Old
<---> Interchangeable

3A165-E090 CYLINDER HEAD COVER GROUP

(CK35-EU : ~ FT8100016)

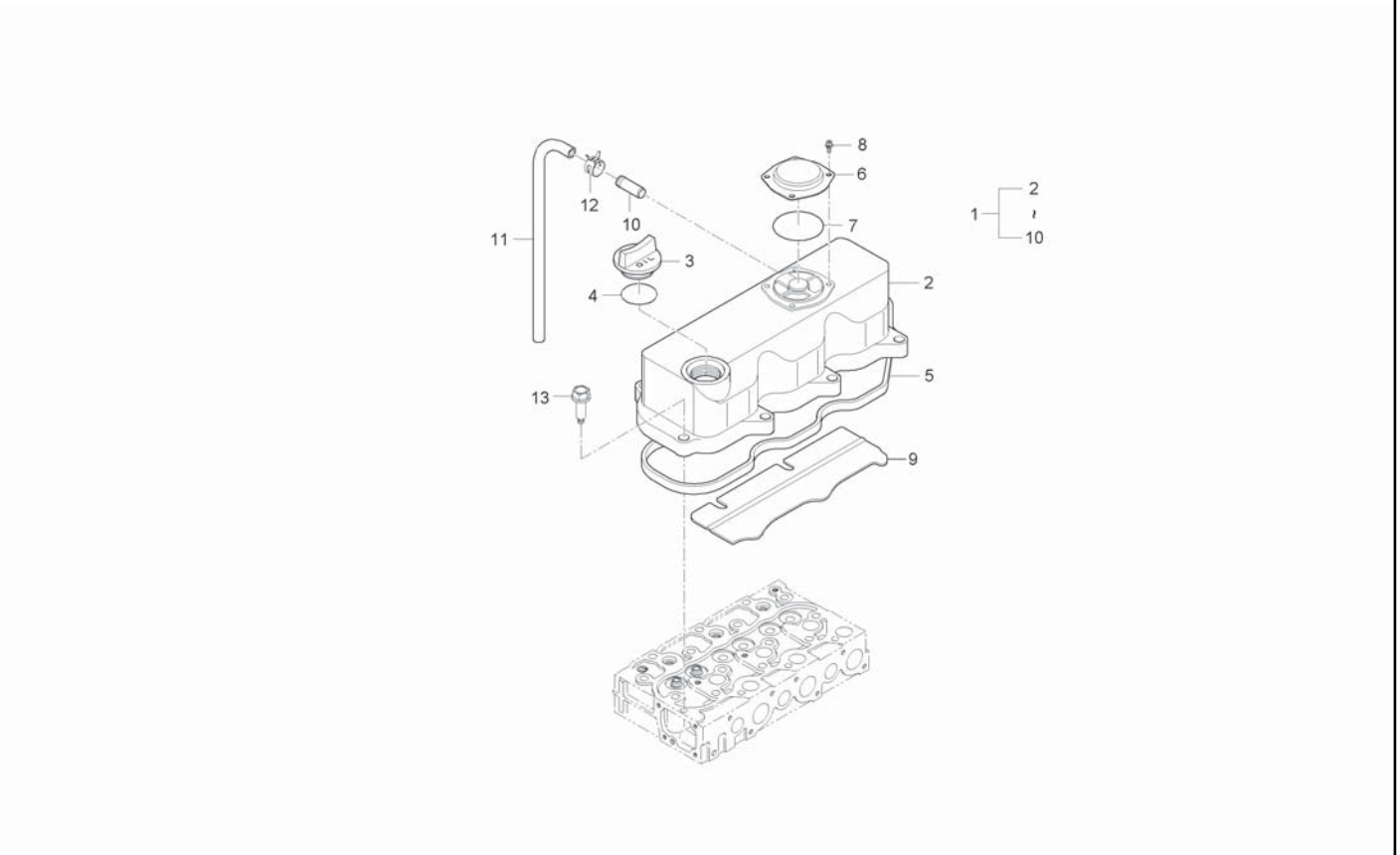

A : CK35-EU , B : CK35H-EU

No.	Part Number	Desciption	Q'TY A	Q'TY B	Q'TY C	Q'TY D	Q'TY E	I.C	Remark
1	E5800-14505	CYLINDER HEAD COVER ASSY	1						
1	E5850-14502	CYLINDER HEAD COVER ASSY	1					<-X->	
1	E5850-14503	CYLINDER HEAD COVER ASSY	1					<----	
2	E5800-14514	COVER, CYLINDER HEAD	1						
2	E5850-14512	COVER, CYLINDER HEAD	1					<-X->	
3	E5500-33142	PLUG, OIL FILLER	1						
4	04811-50300	O RING	1						
5	E5850-14521	GASKET, CYLINDER HEAD COVER	1						
6	E6510-14532	COVER, VALVE	1						
7	E6510-14671	O RING	1						
8	03024-50510	SCREW, WASHER	4						
9	E5850-14561	PLATE, OIL PROTECTING	1						
10	E6510-05551	CONNECTOR, AIR BREATHER HOSE	1						
10	E6510-05552	CONNECTOR, AIR BREATHER HOSE	1					<----	
11	E5850-05511	HOSE, AIR BREATHER	1						
12	09318-88180	CLMAP, HOSE	2						
13	E6510-33661	BOLT, CYLINDER HEAD COVER	8						
13	E6850-33661	BOLT, CYLINDER HEAD COVER	8					<----	
13	E6510-33661	BOLT, CYLINDER HEAD COVER	8					<--->	

----> Old replace New
<-X-> Not interchangeable
<-O-> Interchangeable with another part(s)
<---- New replace Old
<---> Interchangeable

3A165LX-E090 CYLINDER HEAD COVER GROUP

(CK35-EU : GT8100001 ~)

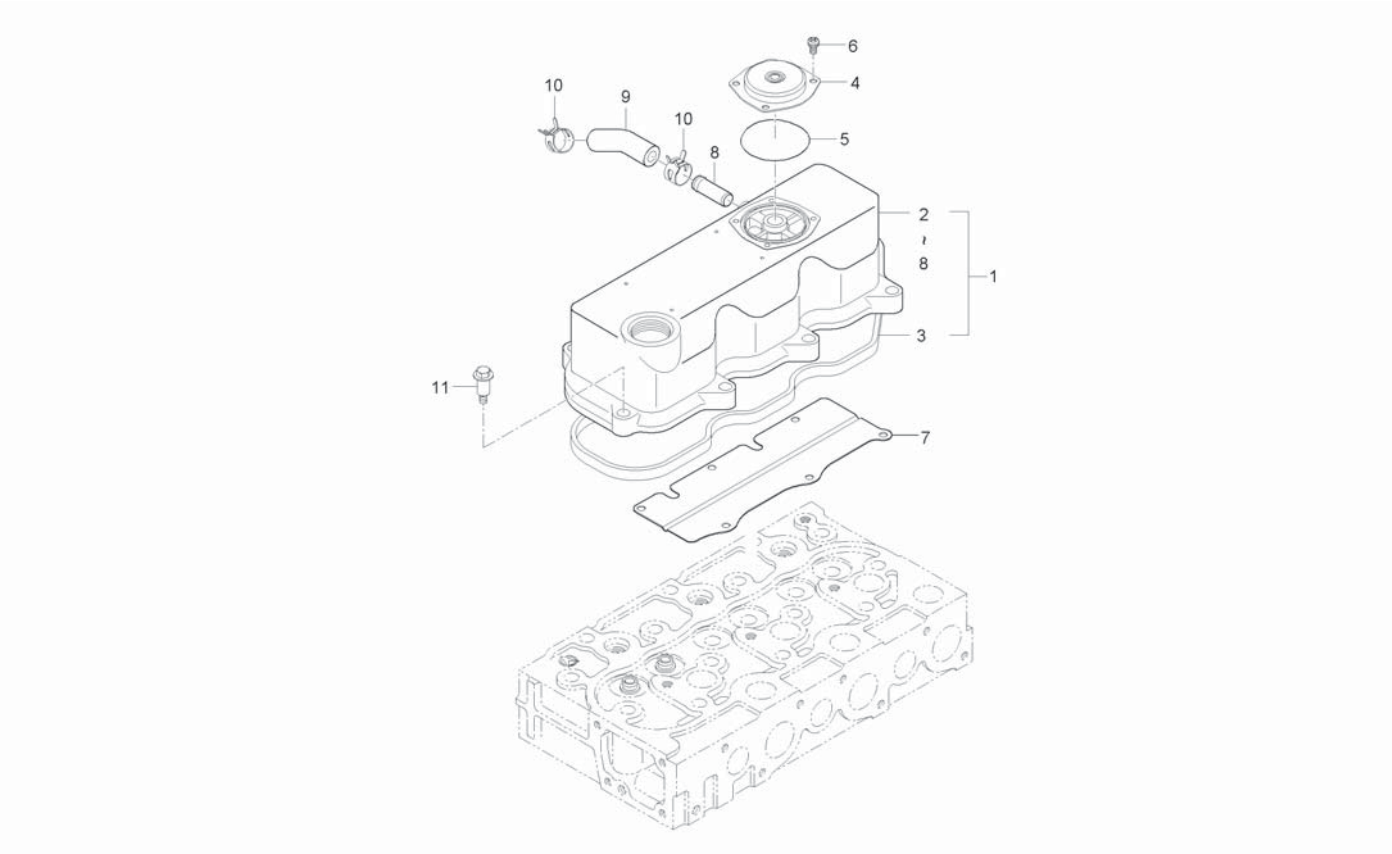

A : CK35-EU , B : CK35H-EU

No.	Part Number	Desciption	Q'TY A	Q'TY B	Q'TY C	Q'TY D	Q'TY E	I.C	Remark
1	E5640-14501	CYLINDER HEAD COVER ASSY	1	1					
2	E5640-14511	COVER, CYLINDER HEAD	1	1					
3	E5850-14521	GASKET, CYLINDER HEAD COVER	1	1					
4	E6510-14532	COVER, VALVE	1	1					
5	E6510-14671	O RING	1	1					
6	03024-50510	SCREW, WASHER	4	4					M5*P0.8
7	E5850-14561	PLATE, OIL PROTECTING	1	1					
8	E6510-05552	CONNECTOR, AIR BREATHER HOSE	1	1					
9	E5850-05511	HOSE, AIR BREATHER	1	1					
10	09318-88180	CLMAP, HOSE	2	2					
11	E6510-33661	BOLT, CYLINDER HEAD COVER	8	8					

----> Old replace New
<-X-> Not interchangeable
<-O-> Interchangeable with another part(s)
<---- New replace Old
<---> Interchangeable

3A165-E100

CAMSHAFT GROUP

(CK35-EU : ~ GT8100129, CK35H-EU : ~ GT8900088)

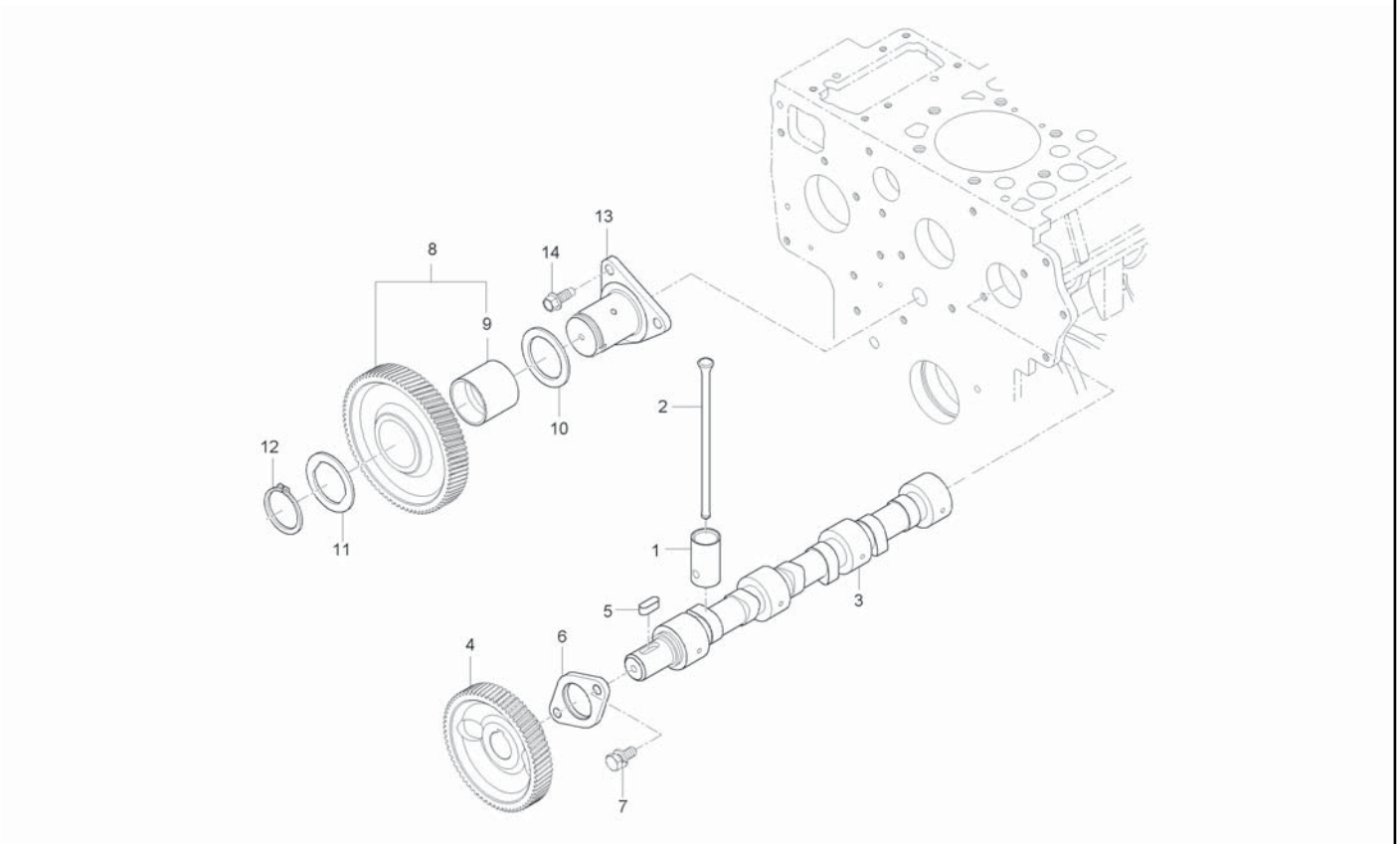

A : CK35-EU , B : CK35H-EU

No.	Part Number	Desciption	Q'TY A	Q'TY B	Q'TY C	Q'TY D	Q'TY E	I.C	Remark
1	E5500-15553	TAPPET	6	6					
2	E6300-15113	ROD, PUSH	6	6					
3	E5600-A0032	CAMSHAFT ASSY	1	1					
4	15521-1651-1	GEAR, CAMSHAFT	1	1					
5	05712-00720	KEY	1	1					8*8*24
6	E5500-16272	STOPPER, CAMSHAFT	1	1					
7	01123-50818	BOLT, WASHER	2	2					M8*P1.25
8	E6300-24012	IDLE GEAR ASSY	1	1					
9	E6300-24281	BUSH, IDLE GEAR	1	1					
10	E6300-24361	COLLAR, 1	1	1					
11	E6300-24371	COLLAR, 2	1	1					
12	E6300-24321	SNAP RING	1	1					
13	E6300-24251	SHAFT, IDLE GEAR	1	1					
13	E6300-24252	SHAFT, IDLE GEAR	1 ~GT8100129	1 ~GT8900088				<----	
13	E6300-24253	SHAFT, IDLE GEAR	1 HT8100001~	1 HT8900001~				<-0->	
14	01754-50820	FLANGE BOLT	3	3					M8*P1.25

----> Old replace New
<-X-> Not interchangeable
<-0-> Interchangeable with another part(s)
<---- New replace Old
<---> Interchangeable

3A165LW-E100 CAMSHAFT GROUP

(CK35-EU : HT8100001 ~ , CK35H-EU : HT8900001 ~)

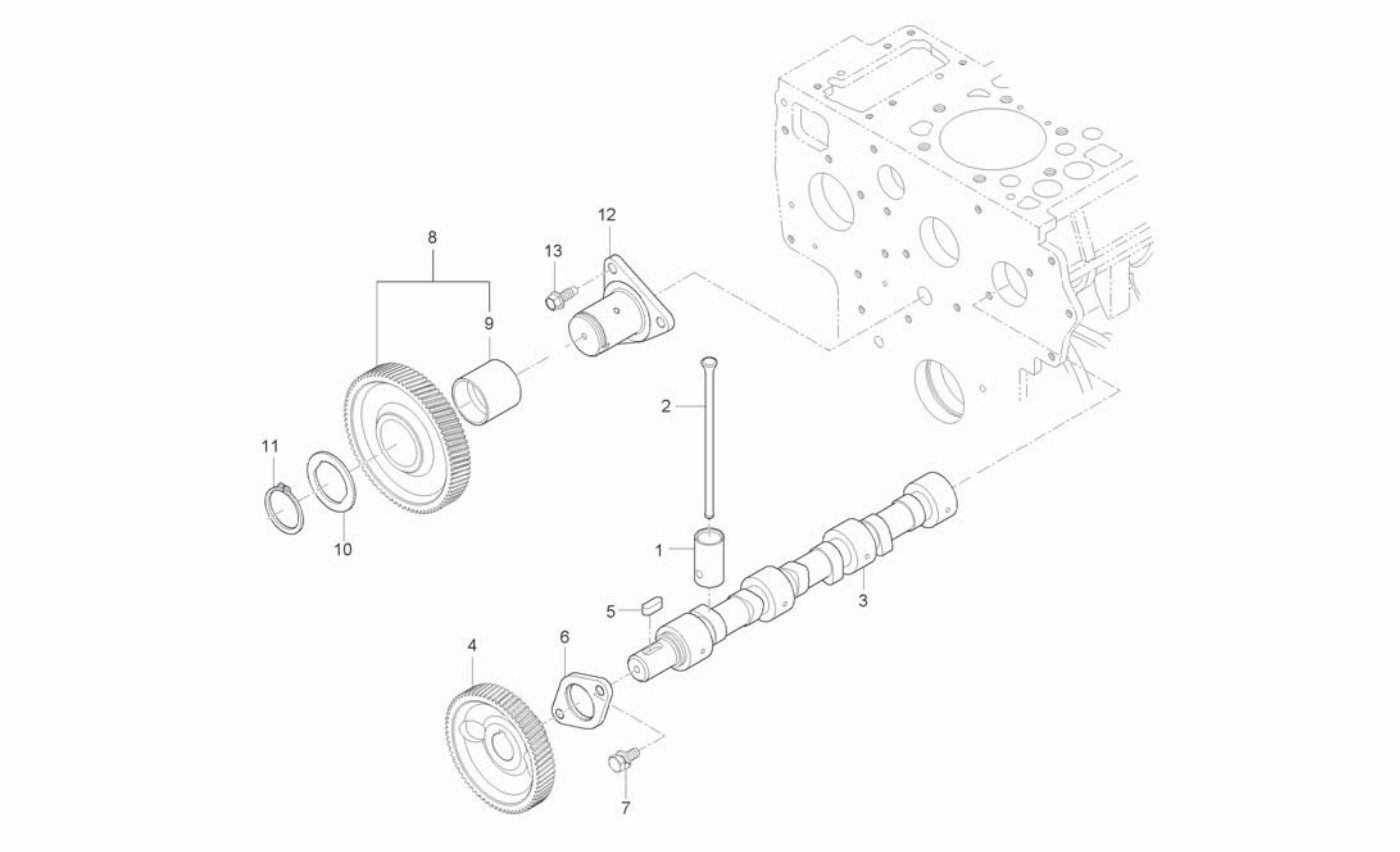

A : CK35-EU , B : CK35H-EU

No.	Part Number	Desciption	Q'TY A	Q'TY B	Q'TY C	Q'TY D	Q'TY E	I.C	Remark
1	E5500-15553	TAPPET	6	6					
2	E6300-15113	ROD, PUSH	6	6					
3	E5600-A0032	CAMSHAFT ASSY	1	1					
4	15521-1651-1	GEAR, CAMSHAFT	1	1					
5	05712-00720	KEY	1	1					8*8*24
6	E5500-16272	STOPPER, CAMSHAFT	1	1					
7	01123-50818	BOLT, WASHER	2	2					M8*P1.25
8	E6300-24012	IDLE GEAR ASSY	1	1					
9	E6300-24281	BUSH, IDLE GEAR	1	1					
10	E6300-24371	COLLAR, 2	1	1					
11	E6300-24321	SNAP RING	1	1					
12	E6300-24253	SHAFT, IDLE GEAR	1	1					
13	01754-50820	FLANGE BOLT	3	3					M8*P1.25

----> Old replace New
<-X-> Not interchangeable
<-O-> Interchangeable with another part(s)
<---- New replace Old
<---> Interchangeable

3A165C-E110 PISTON & CRANKSHAFT GROUP

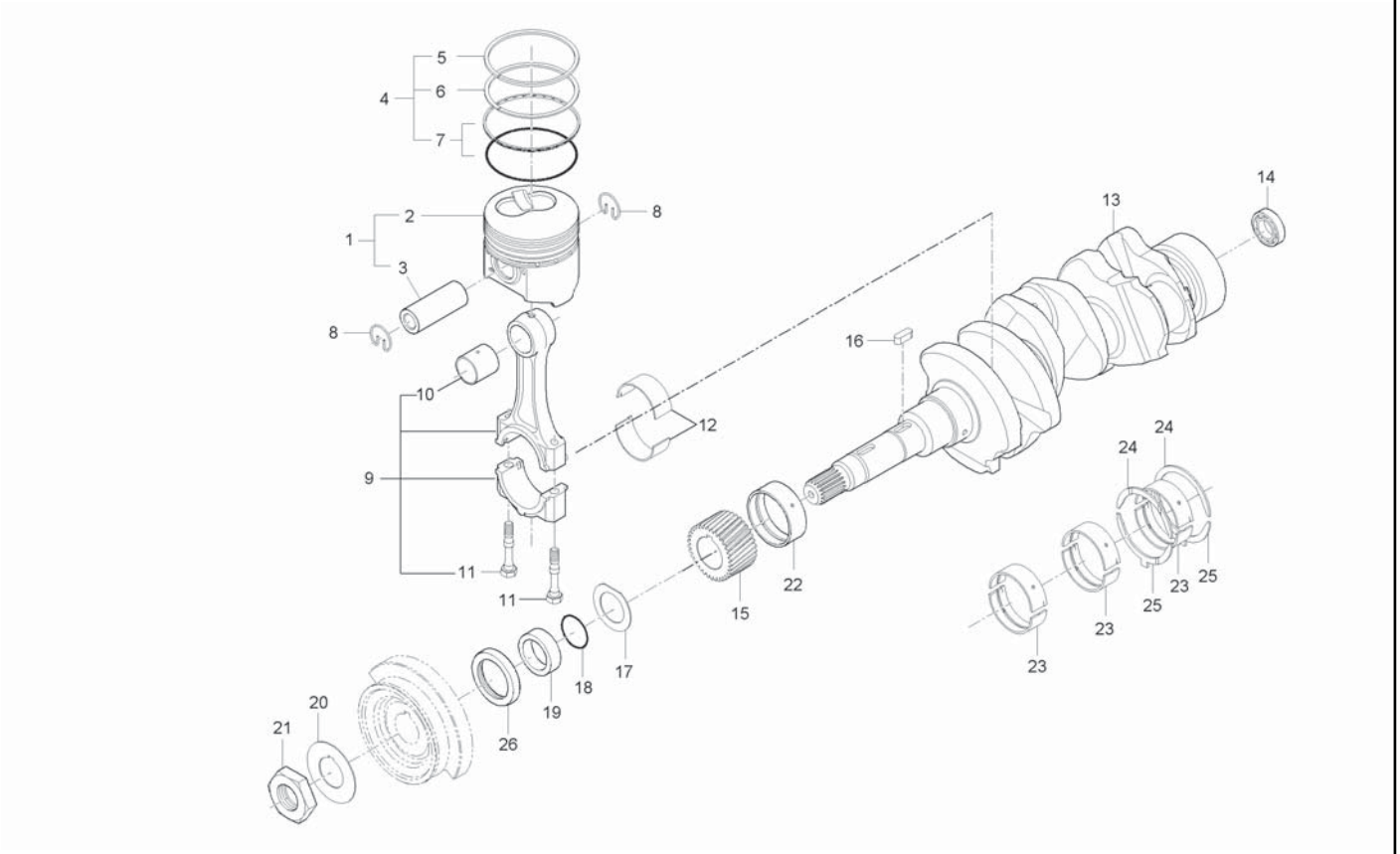

A : CK35-EU , B : CK35H-EU

No.	Part Number	Desciption	Q'TY A	Q'TY B	Q'TY C	Q'TY D	Q'TY E	I.C	Remark
1	E6301-21016	PISTON ASSY	3	3					
2	E6301-21114	PISTON	3	3					
3	E6300-21313	PIN, PISTON	3	3					
3	E6720-21312	PIN, PISTON		3				<--->	
4	E6301-21053	PISTON RING ASSY	3	3					
5	E6301-21152	RING 1, PISTON	3	3					
6	E6300-21162	RING 2, PISTON	3	3					
7	E6301-21202	OIL RING ASSY	3	3					
8	E6300-21332	SNAP RING	6	6					
9	E6300-22026	CONNECTOR ROD PART ASSY	3	3					
9	E6300-22027	CONNECTOR ROD PART ASSY	3	3				<--->	
9	E6300-22028	ASS'Y ROD, CONNECTING	3	3				<--->	
10	E6300-21353	PISTON BUSH	3	3					
11	E5500-22142	BOLT, CONNECTING ROD	6	6					
11	E5800-22141	BOLT, CONNECTING ROD	6	6				<--->	
12	E6300-22312	METAL, CRANK PIN	6	6					
13	E5800-A0100	CRANKSHAFT ASSY	1	1					
14	08121-06002	BALL BEARING	1	1					#6002ZZ
15	E6200-24112	GEAR, CRANKSHAFT	1	1					

----> Old replace New
<-X-> Not interchangeable
<-O-> Interchangeable with another part(s)
<---- New replace Old
<---> Interchangeable

3A165C-E110 PISTON & CRANKSHAFT GROUP

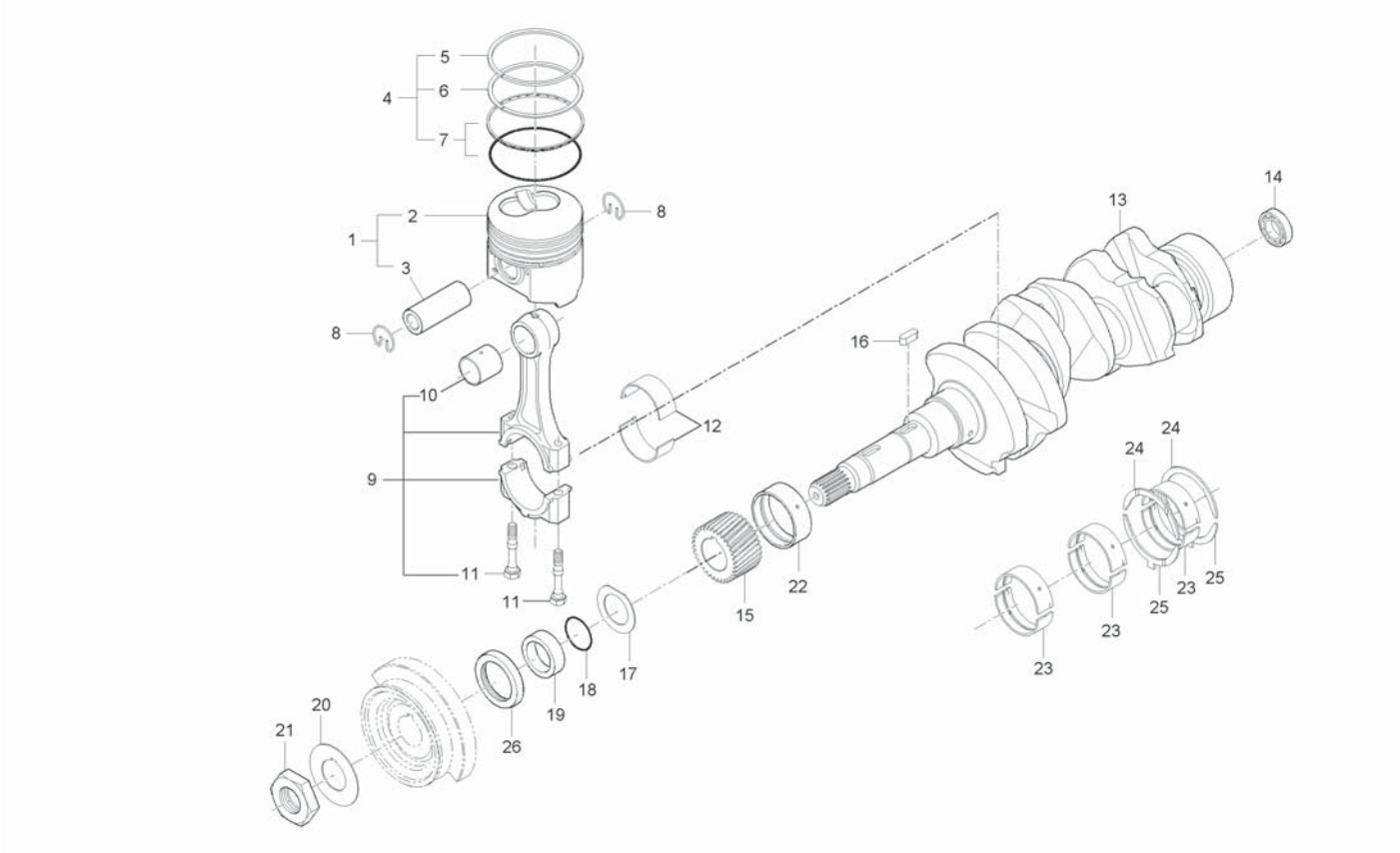

A : CK35-EU , B : CK35H-EU

No.	Part Number	Desciption	Q'TY A	Q'TY B	Q'TY C	Q'TY D	Q'TY E	I.C	Remark
16	05712-00720	KEY	1	1					8*8*24
17	15471-2331-1	SLINGER, OIL	1	1					
18	04811-10300	O RING	1	1					
19	E6510-23251	SPACER	1	1					
20	E5500-23382	WASHER, CRANKSHAFT	1	1					
21	15221-2336-1	NUT, CRANKSHAFT	1	1					
22	E6200-23472	METAL 1, CRANKSHAFT	1	1					
23	E6200-23482	METAL 2, CRANKSHAFT	6	6					
24	15521-2353-1	SIDE METAL, 1	2	2					
24	E6300-23531	METAL SIDE 1	2	2				<--->	
25	19202-2354-1	SIDE METAL, 2	2	2					
25	E6300-23541	SIDE METAL2	2	2				<--->	
26	E5500-11302	SEAL, OIL	1	1					

----> Old replace New
<-X-> Not interchangeable
<-O-> Interchangeable with another part(s)
<---- New replace Old
<---> Interchangeable

3A150D-E120

FLYWHEEL GROUP

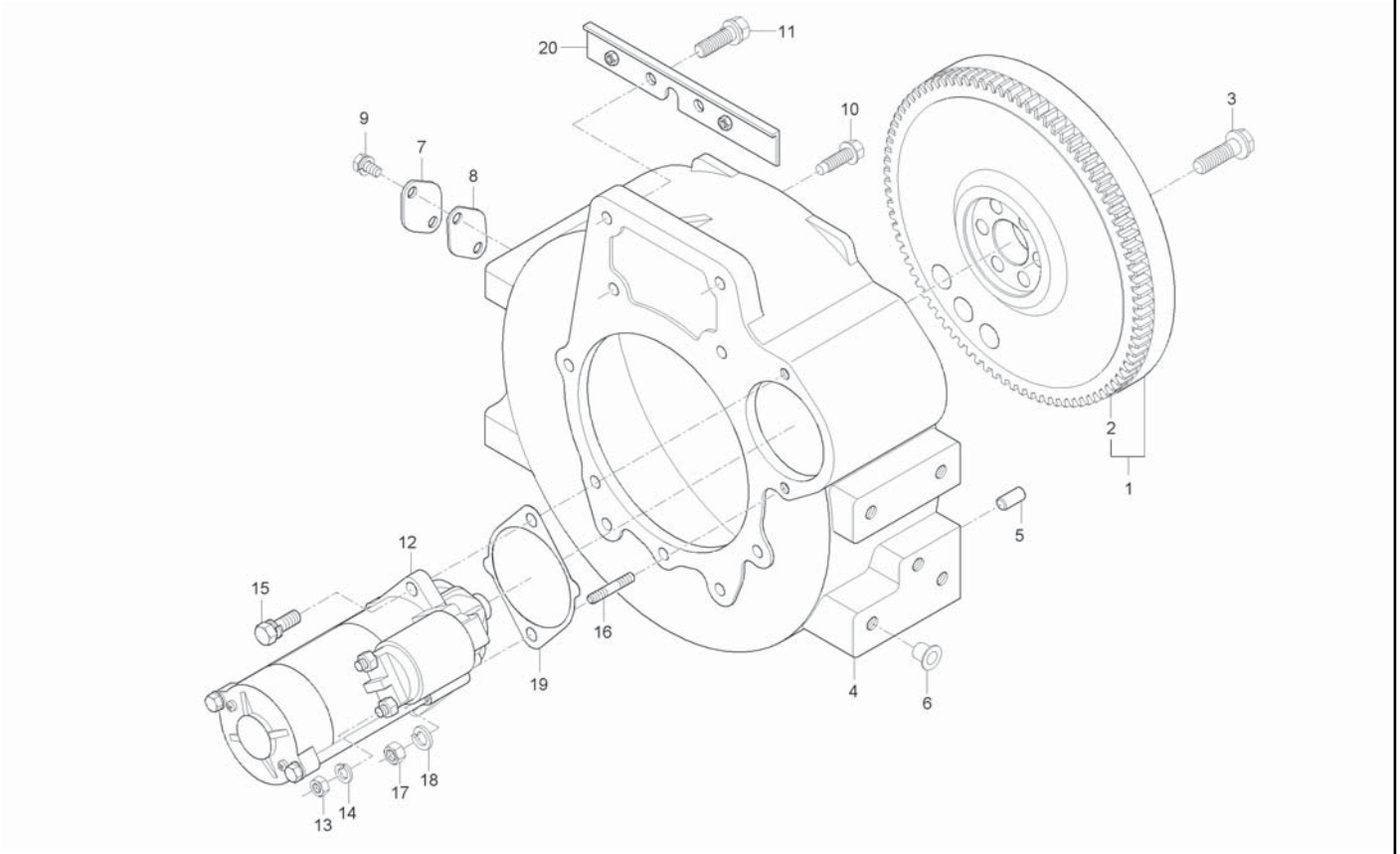

A : CK35-EU , B : CK35H-EU

No.	Part Number	Desciption	Q'TY A	Q'TY B	Q'TY C	Q'TY D	Q'TY E	I.C	Remark
1	E5615-25013	FLYWHEEL ASSY		1					
1	E5615-25014	FLYWHEEL ASSY	1	1				<----	
2	15221-6382-4	RING GEAR	1	1					
3	E5500-25164	BOLT, FLYWHEEL	6	6					
4	E5610-04611	HOUSING, FLYWHEEL		1					
4	E5610-04612	HOUSING, FLYWHEEL	1	1				<----	
4	E5610-04613	HOUSING,FLYWHEEL		1				<----	
5	05012-01025	PIN, PARALLEL	2	2					
6	31220-1429-3	PLUG	10	10					
7	15521-0468-2	COVER, TIMING MARK	1	1					
8	15521-0479-2	GASKET, COVER	1	1					
9	01123-50816	BOLT, WASHER	2	2					M8*P1.25
9	01754-50816	BOLT, FLANGE	2	2				<--->	M8*P1.25
10	01674-51032	BOLT, FLANGE	11	11					
11	01133-51240	BOLT, WASHER	2	2					
12	E5500-63015	START MOTOR ASSY		1					
12	E5500-63016	START MOTOR ASSY	1	1				<----	
13	E6200-04622	GASKET		1					
13	E6200-04623	GASKET	1	1				<----	

----> Old replace New
<-X-> Not interchangeable
<-O-> Interchangeable with another part(s)
<---- New replace Old
<---> Interchangeable

3A150D-E120

FLYWHEEL GROUP

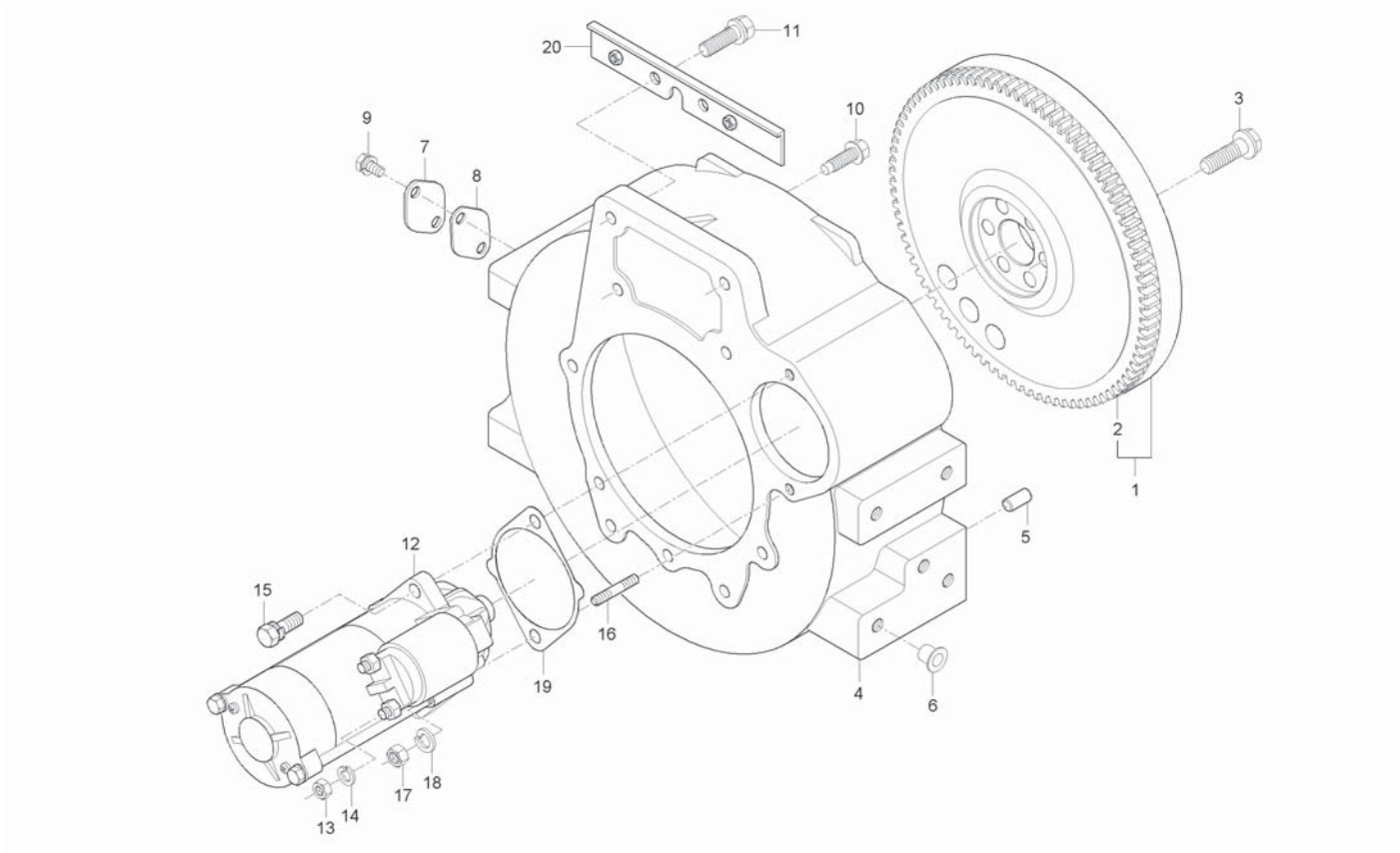

A : CK35-EU , B : CK35H-EU

No.	Part Number	Desciption	Q'TY A	Q'TY B	Q'TY C	Q'TY D	Q'TY E	I.C	Remark
14	02156-50080	NUT	1	1					M8XP1.25
15	04512-50080	SPRING WASHER	1	1					M08
16	01133-51030	BOLT, WASHER	1	1					M10*1.25
17	01517-51028	STUD	1	1					DIA10*48
18	02176-50100	NUT	1	1					M10X1.25
19	04512-50100	WASHER, SPRING	1	1					M10
20	T2185-81132	SUPPORT	1	1					
20	T2185-81132BB	SUPPORT	1	1				<-X->	

----> Old replace New
<-X-> Not interchangeable
<-O-> Interchangeable with another part(s)
<---- New replace Old
<---> Interchangeable

3A150E-E120

FLYWHEEL GROUP

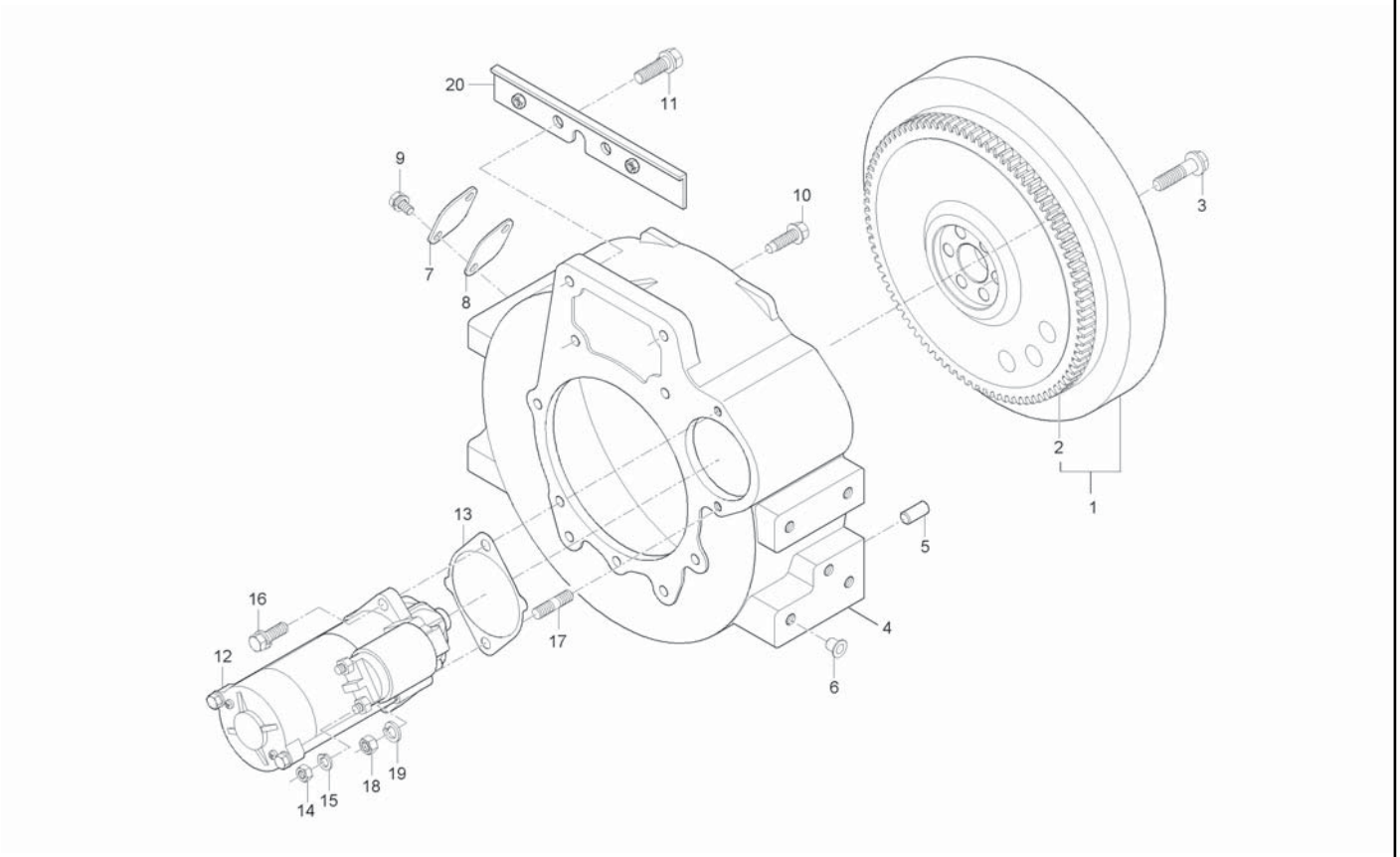

A : CK35-EU , B : CK35H-EU

No.	Part Number	Desciption	Q'TY A	Q'TY B	Q'TY C	Q'TY D	Q'TY E	I.C	Remark
1	E5629-25014	FLYWHEEL ASSY		1					
2	15221-6382-4	RING GEAR		1					
3	E6200-25163	BOLT, FLYWHEEL		6					
4	E5610-04612	HOUSING, FLYWHEEL		1					
5	05012-01025	PIN, PARALLEL		2					
6	31220-1429-3	PLUG		10					
7	15521-0468-2	COVER, TIMING MARK		1					
8	15521-0479-2	GASKET, COVER		1					
9	01123-50816	BOLT, WASHER		2					M8*P1.25
9	01754-50816	BOLT, FLANGE		2				<--->	M8*P1.25
10	01674-51032	BOLT, FLANGE		11					
11	01133-51240	BOLT, WASHER		2					
12	E5500-63016	START MOTOR ASSY		1					
13	E6200-04623	GASKET		1					
14	02156-50080	NUT		1					M8XP1.25
14	02112-50080	NUT		1				<--->	M8*P1.25
15	04512-50080	SPRING WASHER		1					M08
16	01133-51030	BOLT, WASHER		1					M10*1.25
17	01517-51028	STUD		1					DIA10*48

----> Old replace New
<-X-> Not interchangeable
<-O-> Interchangeable with another part(s)
<---- New replace Old
<---> Interchangeable

3A150E-E120

FLYWHEEL GROUP

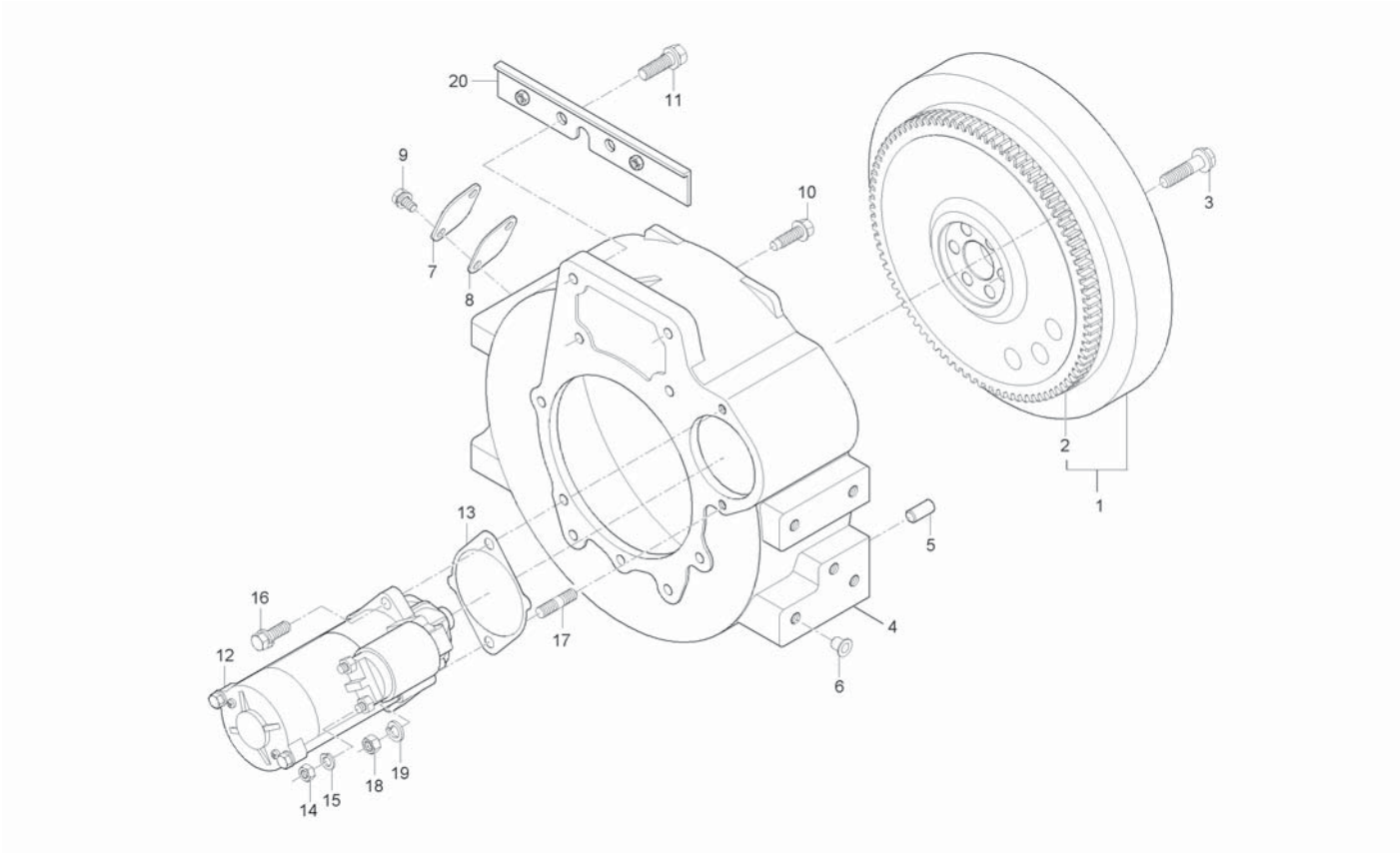

A : CK35-EU , B : CK35H-EU

No.	Part Number	Desciption	Q'TY A	Q'TY B	Q'TY C	Q'TY D	Q'TY E	I.C	Remark
18	02176-50100	NUT		1					M10X1.25
19	04512-50100	WASHER, SPRING		1					M10
20	T2185-81132BB	SUPPORT		1					

----> Old replace New
<-X-> Not interchangeable
<-O-> Interchangeable with another part(s)
<---- New replace Old
<---> Interchangeable

3A165A-E130 NOZZLE HOLDER GROUP

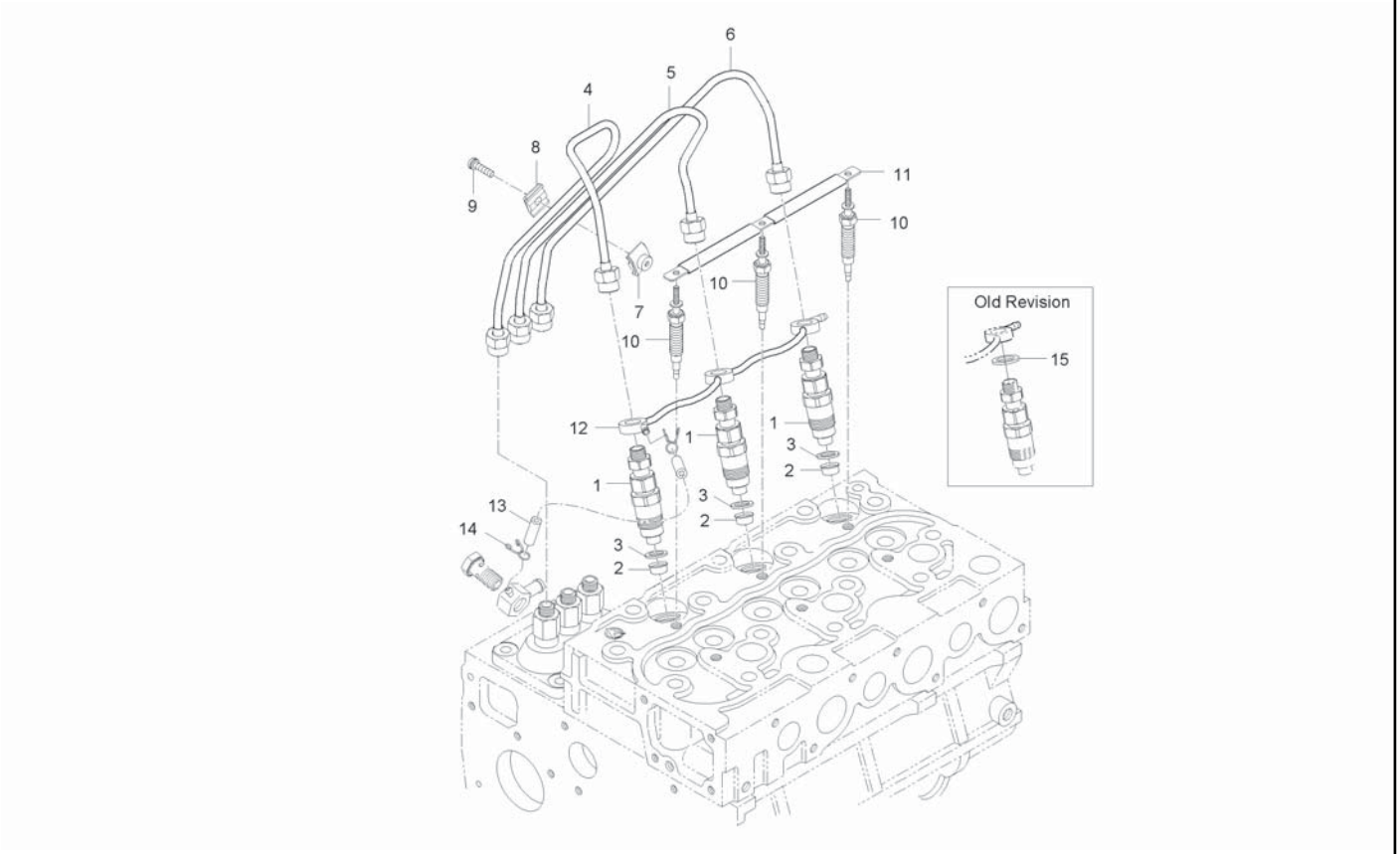

A : CK35-EU , B : CK35H-EU

No.	Part Number	Desciption	Q'TY A	Q'TY B	Q'TY C	Q'TY D	Q'TY E	I.C	Remark
1	E6300-53002	NOZZLE HOLDER ASSY	3	3					
1	E6300-53003	NOZZLE HOLDER ASSY	3	3				<----	
1	E6300-53004	NOZZLE HOLDER ASSY	3	3				<--->	
1	E6300-53005	NOZZLE HOLDER ASSY	3	3				<----	
2	E6300-53651	SEAL, HEAT SHILD	3	3					
3	E6300-53621	GASKET	3	3					
4	E5610-53714	TUBE 1, INJECTION	1	1					
5	E5610-53723	TUBE 2, INJECTION	1	1					
6	E5610-53733	TUBE 3, INJECTION	1	1					
6	E5610-53734	TUBE 3, INJECTION	1	1				<----	
7	15121-5385-2	CLAMP 1, TUBE	2	2					
8	T4815-67371	HOLDER, TUBE	2	2					
9	03024-50520	SCREW, WASHER	2	2					DIA10*28
10	E6301-65512	GLOW PLUG	3	3					
11	E5800-65562	CORD, GLOW PLUG	1	1					
12	E5800-42501	OVERFLOW HOSE ASSY	1	1					
13	09661-40300	HOSE, FUEL	1	1					
14	14971-4275-1	CLMAP, HOSE	2 ~HT8100006	2 ~HT8900016					
14	09318-88080	CLMAP, HOSE	2 HT8100007~	2 HT8900017~				<-O->	

----> Old replace New
<-X-> Not interchangeable
<-O-> Interchangeable with another part(s)
<---- New replace Old
<---> Interchangeable

3A165A-E130

NOZZLE HOLDER GROUP

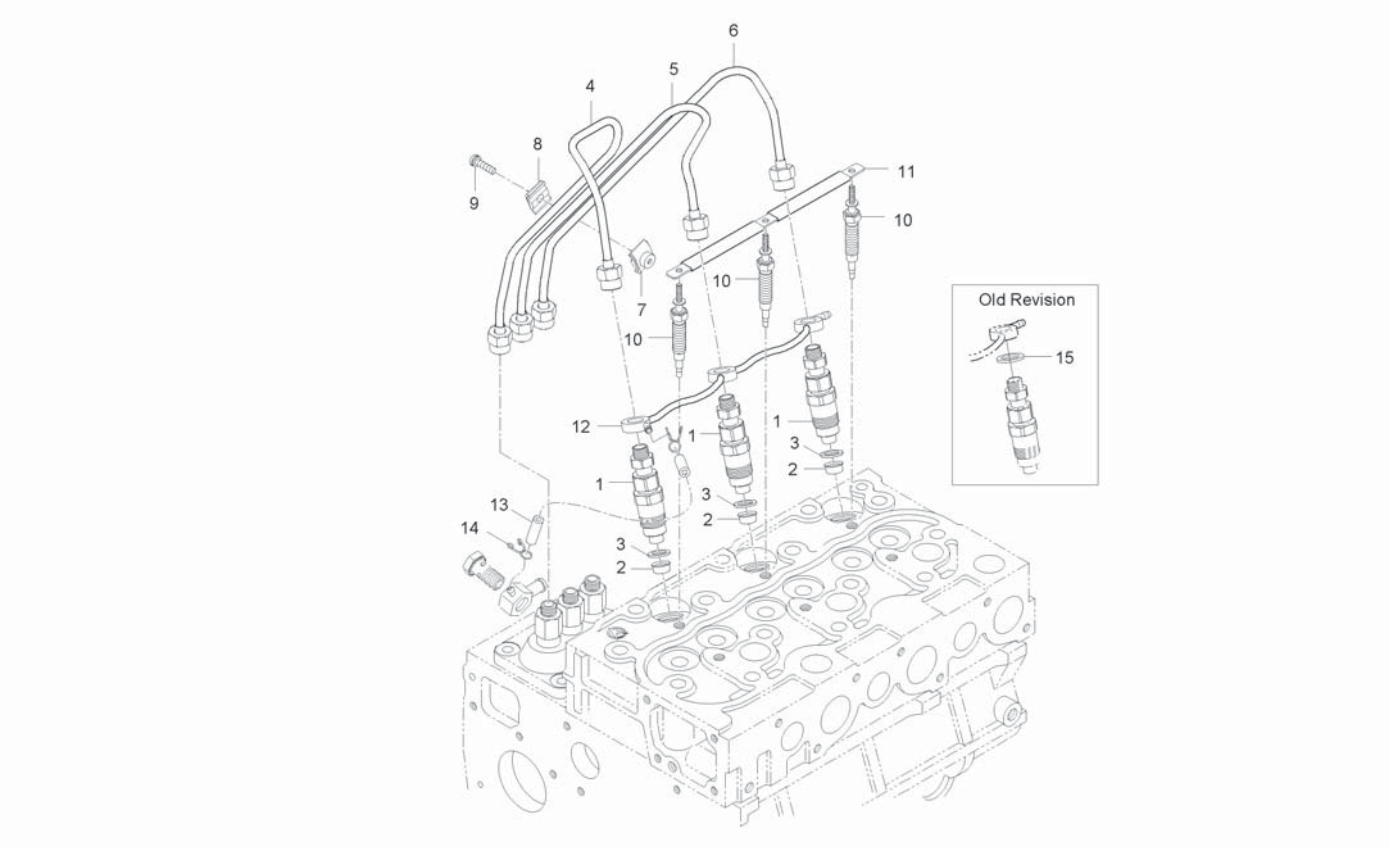

A : CK35-EU , B : CK35H-EU

No.	Part Number	Desciption	Q'TY A	Q'TY B	Q'TY C	Q'TY D	Q'TY E	I.C	Remark
15	E6300-53021	GASKET	3	3					

----> Old replace New
<-X-> Not interchangeable
<-O-> Interchangeable with another part(s)
<---- New replace Old
<---> Interchangeable

3A150E-E140 FUEL CAMSHAFT GROUP

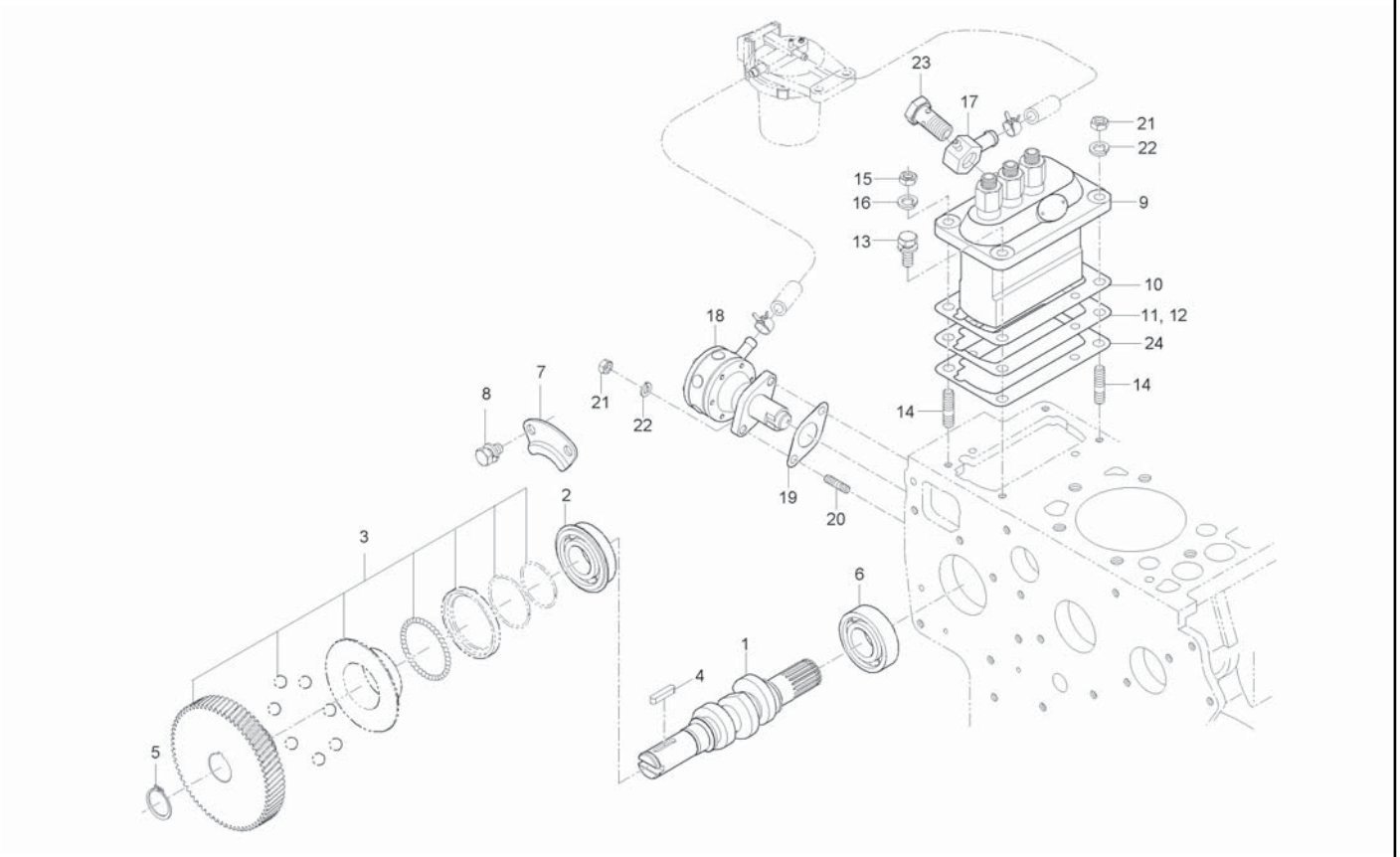

A : CK35-EU , B : CK35H-EU

No.	Part Number	Desciption	Q'TY A	Q'TY B	Q'TY C	Q'TY D	Q'TY E	I.C	Remark
1	E5610-16171	CAMSHAFT, FUEL	1	1					
2	08153-06205	BALL BEARING	1	1					#6205NRC3
3	E6300-51051	INJECTION PUMP GEAR ASSY	1	1					
3	E6300-51052	INJECTION PUMP GEAR ASSY	1	1				<----	
4	05712-00525	KEY	1	1					7*7*29
5	04612-00240	SNAP RING	1	1					
6	08240-00001	BALL BEARING	1	1					3205A
7	15221-1632-1	STOPPER, FUEL CAMSHAFT	1	1					
8	01123-50814	BOLT, WASHER	2	2					M8*P1.25
9	E5800-51011	INJECTION PUMP ASSY	1	1					
9	E5800-51012	INJECTION PUMP ASSY	1	1				<----	
9	E5800-51014	INJECTION PUMP ASSY	1	1				<--->	
9	E5800-51015	ASSY PUMP,INJECTION	1	1				<----	
10	E5500-52112	SHIM, INJECTION PUMP	99	99					
11	E5500-52122	SHIM, INJECTION PUMP	99	99					
12	E5800-52111	SHIM 3, INJECTION PUMP	99	99					
13	01123-50822	BOLT	2	2					M8XP1.25
14	01513-50822	STUD	2	2					M8*1.25
15	02156-50080	NUT	2	2					M8XP1.25

----> Old replace New
<-X-> Not interchangeable
<-O-> Interchangeable with another part(s)
<---- New replace Old
<---> Interchangeable

3A150E-E140

FUEL CAMSHAFT GROUP

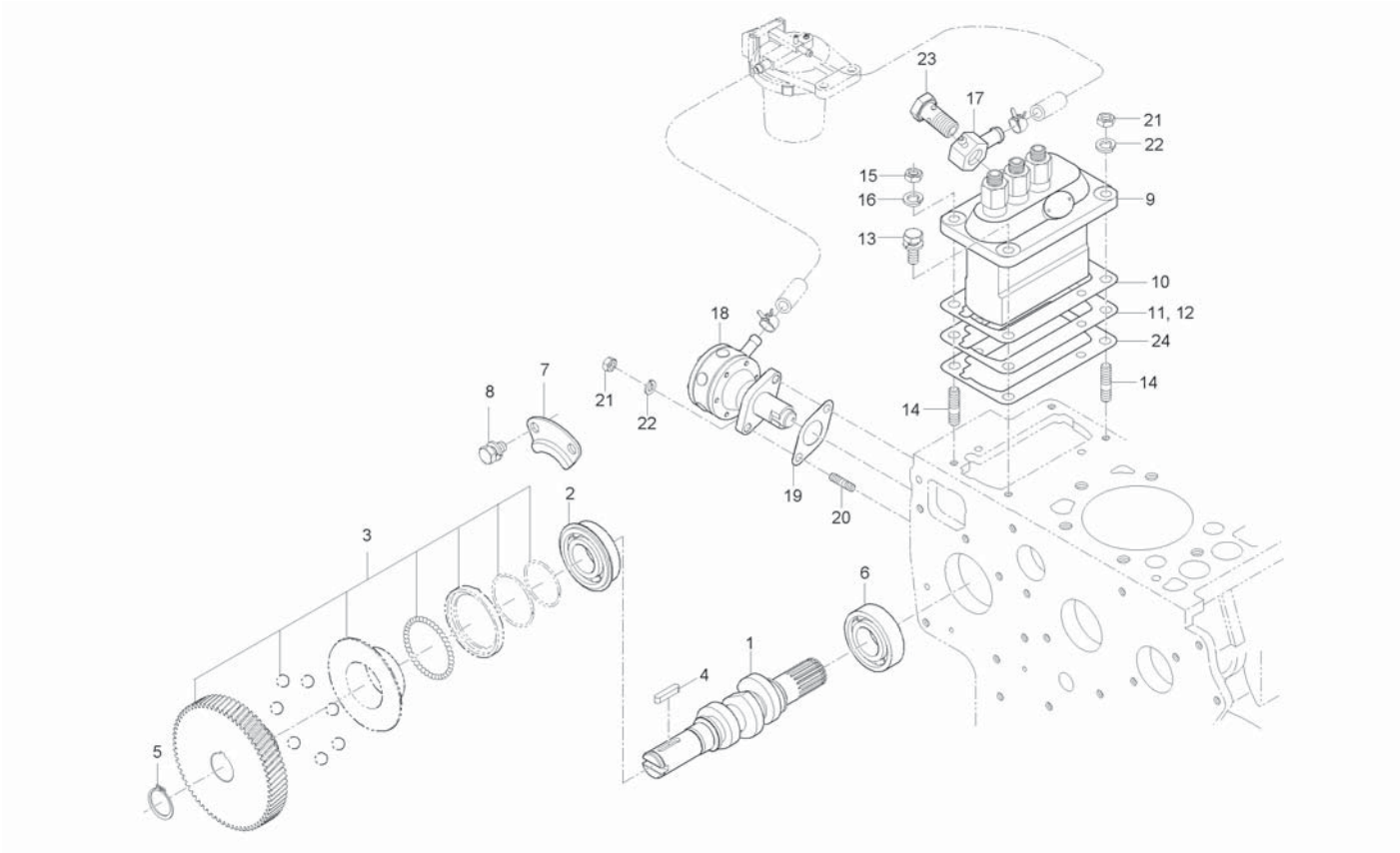

A : CK35-EU , B : CK35H-EU

No.	Part Number	Desciption	Q'TY A	Q'TY B	Q'TY C	Q'TY D	Q'TY E	I.C	Remark
16	04512-50080	SPRING WASHER	2	2					M08
17	E6500-42412	JOINT, FUEL PIPE	1	1					
18	15381-5203-0	FUEL PUMP ASSY	1 ~JT8100068	1 ~JT8900026					
18	E5775-52031	FUEL PUMP ASSY	1 JT8100069~	1 JT8900027~				<-0->	
19	15241-5214-1	GASKET, FUEL PUMP	1	1					
19	E6200-52142	GASKET, FUEL PUMP	1	1				<----	
20	01513-50618	STUD	2	2					M6*1.0
21	02056-50060	NUT	2	2					M6*P1.0
22	04512-50060	WASHER, SPRING	2	2					M6
23	E5629-24401	EYE BOLT	1	1					
24	E5603-52111	SHIM,INJECTION PUMP	2	2					

----> Old replace New
<-X-> Not interchangeable
<-O-> Interchangeable with another part(s)
<---- New replace Old
<---> Interchangeable

3A150LW-E140

FUEL CAMSHAFT GROUP

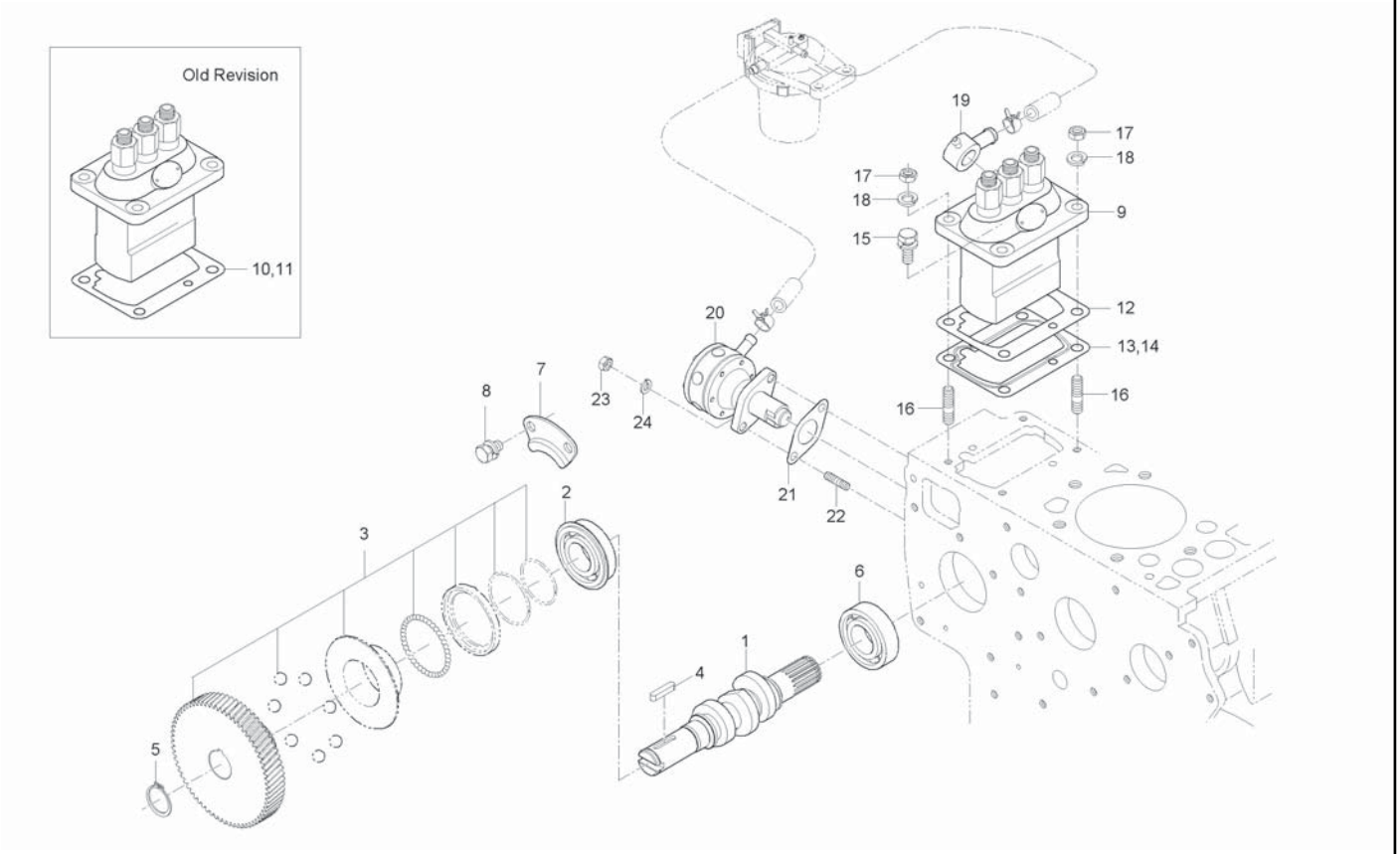

A : CK35-EU , B : CK35H-EU

No.	Part Number	Desciption	Q'TY A	Q'TY B	Q'TY C	Q'TY D	Q'TY E	I.C	Remark
1	E5640-16171	CAMSHAFT,FUEL	1	1					
2	08153-06205	BALL BEARING	1	1					#6205NRC3
3	E6300-51052	INJECTION PUMP GEAR ASSY	1	1					
4	05712-00525	KEY	1	1					7*7*29
5	04612-00240	SNAP RING	1	1					
6	08240-00001	BALL BEARING	1	1					3205A
7	15221-1632-1	STOPPER, FUEL CAMSHAFT	1	1					
8	01123-50814	BOLT, WASHER	2	2					M8*P1.25
9	E5800-51015	ASSY PUMP,INJECTION	1	1					
10	E5500-52112	SHIM, INJECTION PUMP	99	99					
11	E5500-52122	SHIM, INJECTION PUMP	99	99					
12	E5800-52111	SHIM 3, INJECTION PUMP	99	99					
13	E8103-52111	SHIM,INJECTION PUMP	2	2					
14	E5603-52111	SHIM,INJECTION PUMP	2	2					
15	01123-50822	BOLT	2	2					M8XP1.25
16	01513-50822	STUD	2	2					M8*1.25
17	02156-50080	NUT	2	2					M8XP1.25
18	04512-50080	SPRING WASHER	2	2					M08
19	E6500-42413	JOINT, FUEL PIPE	1	1					

----> Old replace New
<-X-> Not interchangeable
<-O-> Interchangeable with another part(s)
<---- New replace Old
<---> Interchangeable

3A150LW-E140 FUEL CAMSHAFT GROUP

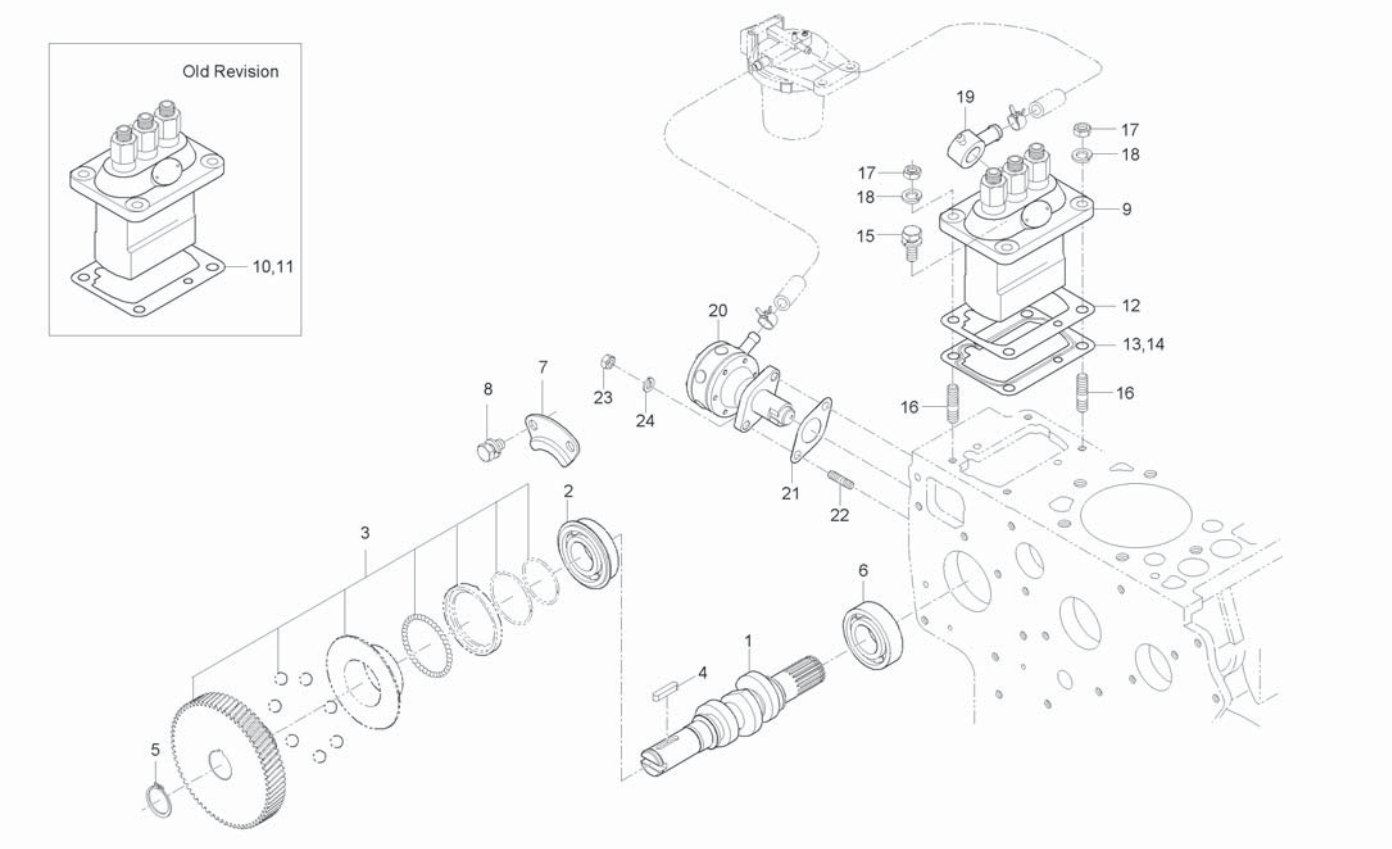

A : CK35-EU , B : CK35H-EU

No.	Part Number	Desciption	Q'TY A	Q'TY B	Q'TY C	Q'TY D	Q'TY E	I.C	Remark
20	E5775-52031	FUEL PUMP ASSY	1	1					
21	E6200-52142	GASKET, FUEL PUMP	1	1					
22	01513-50618	STUD	2	2					M6*1.0
23	02056-50060	NUT	2	2					M6*P1.0
24	04512-50060	WASHER, SPRING	2	2					M6

----> Old replace New
<-X-> Not interchangeable
<-O-> Interchangeable with another part(s)
<---- New replace Old
<---> Interchangeable

4B243-E150 SPEED CONTROL LEVER GROUP

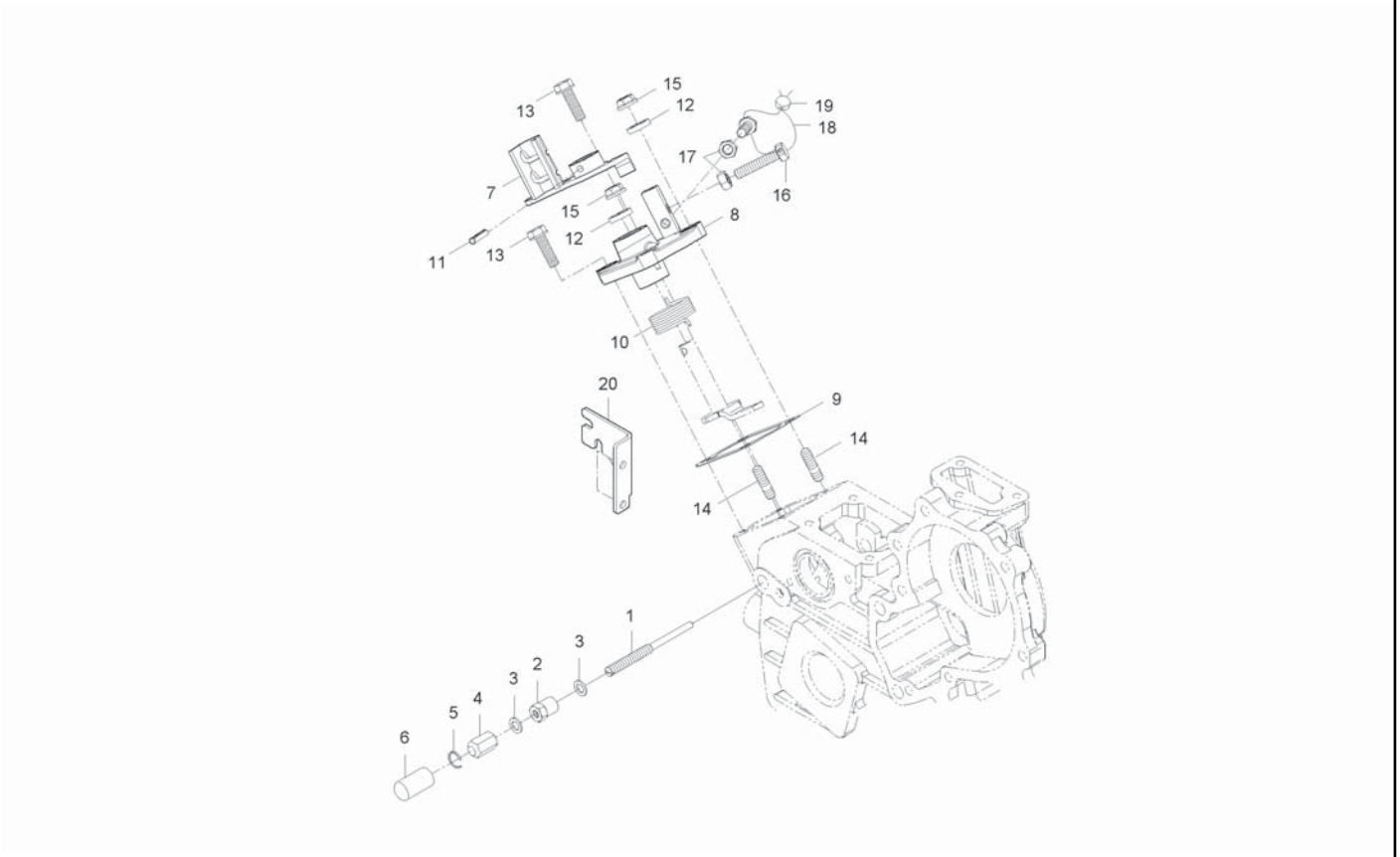

A : CK35-EU , B : CK35H-EU

No.	Part Number	Desciption	Q'TY A	Q'TY B	Q'TY C	Q'TY D	Q'TY E	I.C	Remark
1	15601-5412-1	BOLT, FUEL ADJUSTING	1	1					
1	E6301-54121	BOLT, FUEL ADJUSTING	1	1				<--->	
1	E6301-54122	BOLT, FUEL ADJUSTING	1	1				<--->	
2	E6305-92021	NUT	1	1					
3	E6305-96652	GASKET	2	2					
4	E6305-54221	CAP NUT	1	1					
5	E6305-54281	SNAP RING	1	1					
6	E6305-54421	CAP	1	1					
7	E6850-57151	LEVER, SPEED CONTROL	1	1					
7	E6850-57152	LEVER, SPEED CONTROL	1	1				<--->	
8	E5850-57112	PLATE, SPEED CONTROL	1	1					
9	E5850-57212	GASKET, SPEED CONTROL PLATE	1	1					
10	E5850-57921	SPRING	1	1					
11	05411-00420	PIN, SPRING	1	1					
12	15471-5798-1	SEAL, OIL	1	1					
13	01023-50620	BOLT, WASHER	3	3					M6*1.0
13	01754-50620	BOLT, FLANGE	3	3				<--->	
14	15221-8821-1	STUD	1	1					
15	02761-50060	FLANGE NUT	1	1					M6XP1.0

----> Old replace New
<-X-> Not interchangeable
<-O-> Interchangeable with another part(s)
<---- New replace Old
<---> Interchangeable

4B243-E150 SPEED CONTROL LEVER GROUP

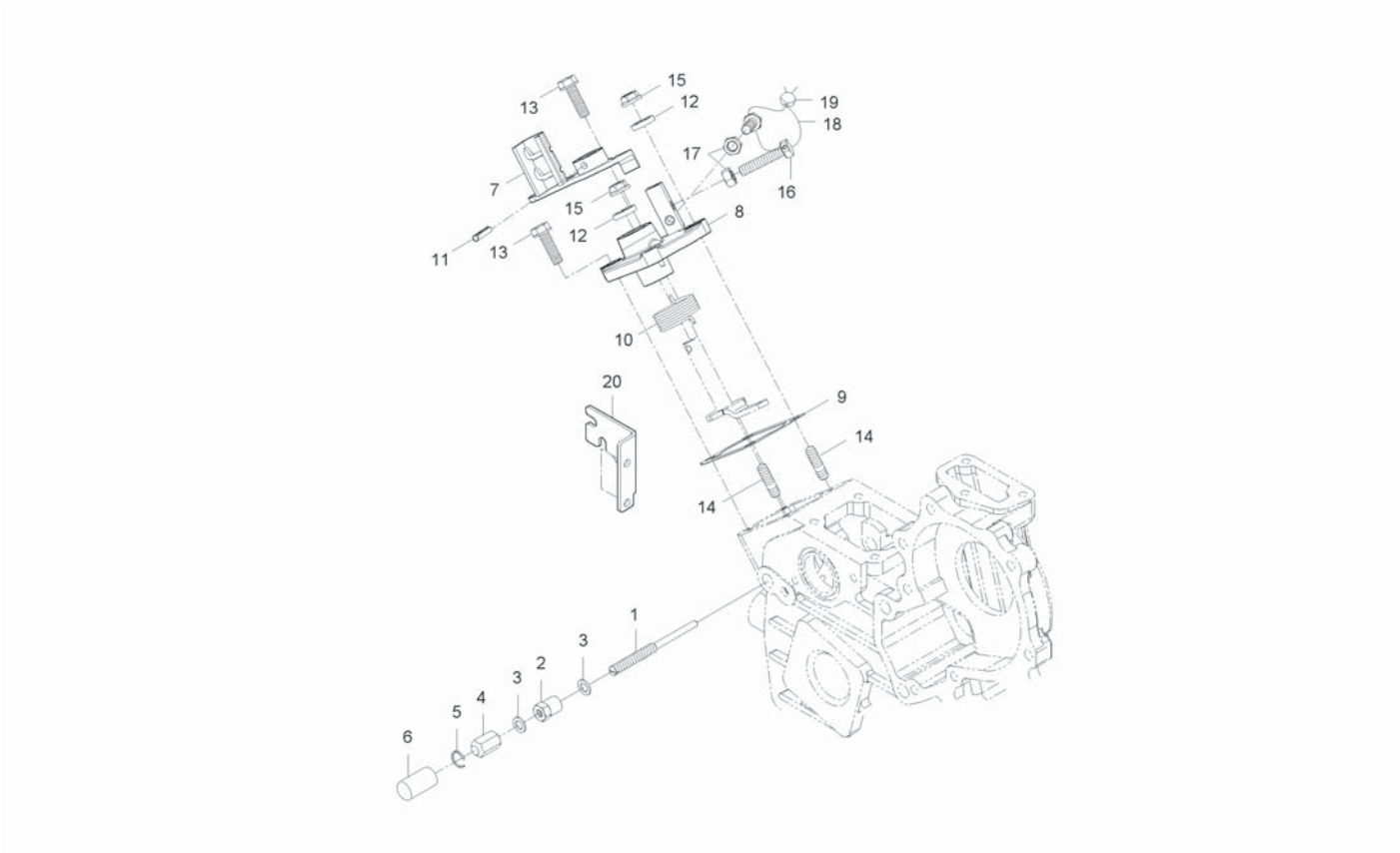

A : CK35-EU , B : CK35H-EU

No.	Part Number	Desciption	Q'TY A	Q'TY B	Q'TY C	Q'TY D	Q'TY E	I.C	Remark
15	02751-50060	FLANGE NUT	1	1				<----	M6*P1.0
16	15108-5728-4	SCREW, STOPPER	2	2					
17	02056-50060	NUT	2	2					M6*P1.0
18	07811-10820	WIRE	1	1					
19	07918-00001	LEAD, SEALING	1	1					
20	E5850-57483	BRACKET, CABLE	1	1					

----> Old replace New
<-X-> Not interchangeable
<-O-> Interchangeable with another part(s)
<---- New replace Old
<---> Interchangeable

3A165LXB-E160 ENGINE STOP LEVER GROUP

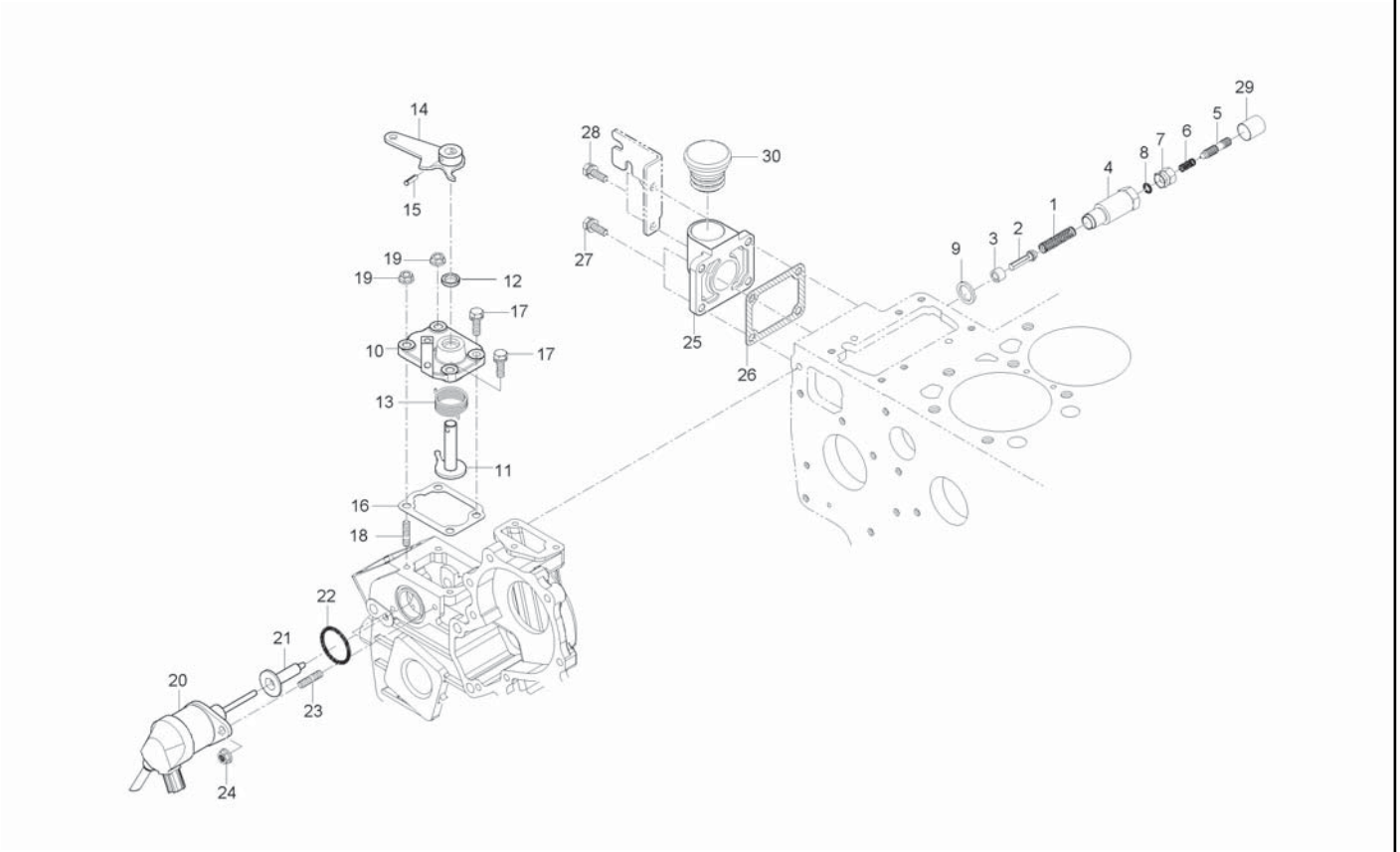

A : CK35-EU , B : CK35H-EU

No.	Part Number	Desciption	Q'TY A	Q'TY B	Q'TY C	Q'TY D	Q'TY E	I.C	Remark
1	E5850-54261	SPRING	1	1					
2	E5850-54272	SHAFT, IDLE ADJUSTMENT	1	1					
3	E5850-54282	BUSH	1	1					
4	E5850-54291	ADJUSTMENT BODY, IDLE	1	1					
5	E5850-54251	BOLT, IDLE ADJUSTMENT	1	1					
6	15521-5426-1	SPRING	1	1					
7	E5850-92011	NUT	1	1					
8	04811-00060	O RING	1	1					
9	04724-00140	PACKING	1	1					
10	E5850-57112	PLATE, SPEED CONTROL	1	1					
11	E5850-57741	LEVER 2, ENGINE STOP	1						
11	E5850-57742	LEVER 2, ENGINE STOP	1	1				<----	
12	15471-5798-1	SEAL, OIL	1	1					
13	E5850-57921	SPRING	1	1					
14	E5850-57731	LEVER 1, ENGINE STOP	1	1					
15	05411-00420	PIN, SPRING	1	1					
16	E5850-57212	GASKET, SPEED CONTROL PLATE	1	1					
17	01023-50620	BOLT, WASHER	2 ~HT8100006	2 ~HT8900016					M6*1.0
17	01023-50618	BOLT, WASHER	2 HT8100007~	2 HT8900017~				<-X->	

----> Old replace New
<-X-> Not interchangeable
<-O-> Interchangeable with another part(s)
<---- New replace Old
<---> Interchangeable

3A165LXB-E160 ENGINE STOP LEVER GROUP

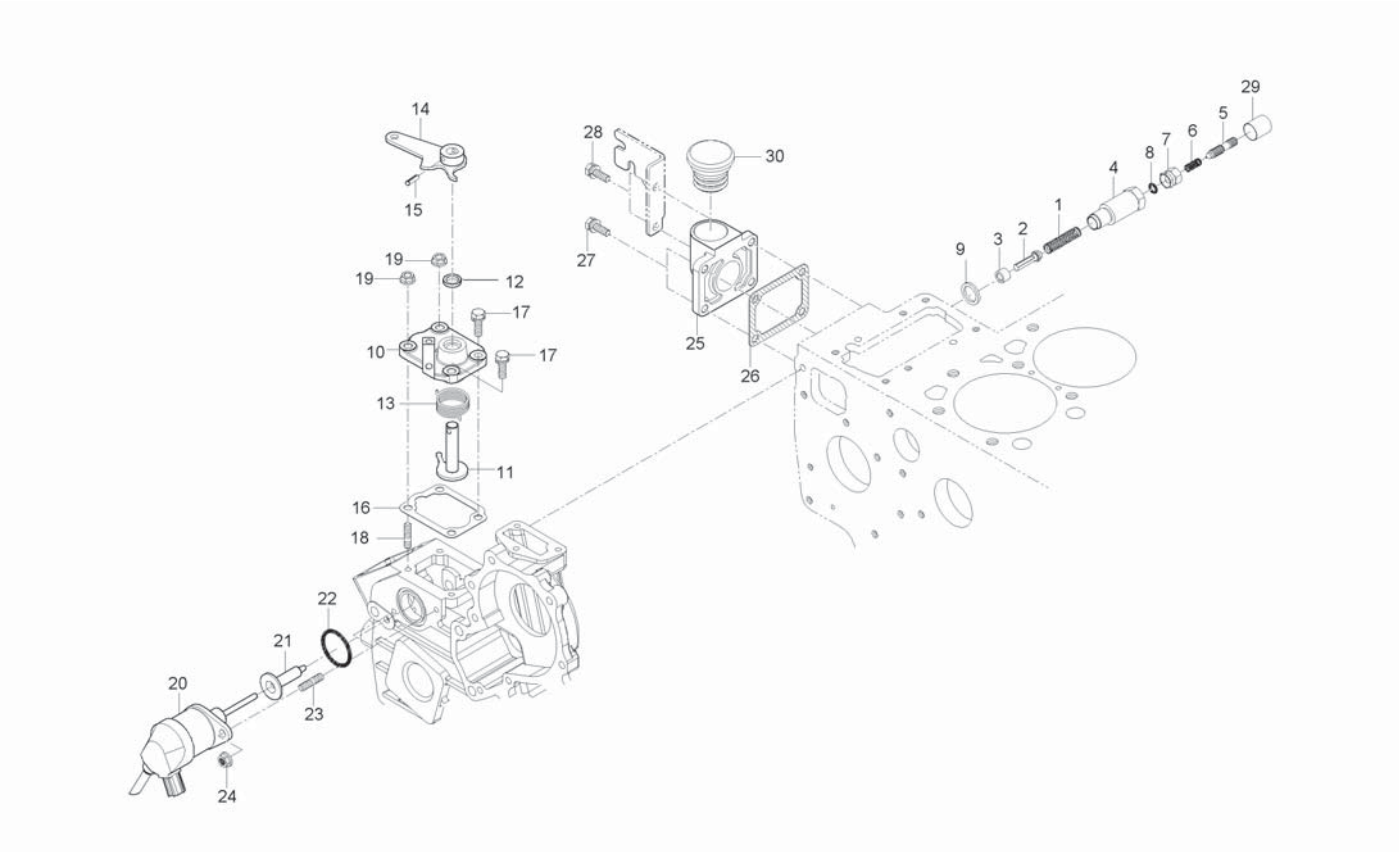

A : CK35-EU , B : CK35H-EU

No.	Part Number	Desciption	Q'TY A	Q'TY B	Q'TY C	Q'TY D	Q'TY E	I.C	Remark
17	01023-50616	BOLT, WASHER	2	2				<--->	M6*P1.0
18	15221-8821-1	STUD	2	2					
19	02761-50060	FLANGE NUT	2	2					M6XP1.0
20	E6850-60011	SOLENOID, ENGINE STOP	1 ~GT8100129	1 ~HT8900010					
20	E6850-60012	SOLENOID, ENGINE STOP	1 HT8100001~	1 HT8900011~				<-0->	
21	E5850-56603	GUIDE, ENGINE STOP SOLENOID	1	1					
22	04814-06310	O RING	1	1					
23	01513-50614	STUD	2	2					
24	02761-50060	FLANGE NUT	2	2					M6XP1.0
25	E5850-33111	FLANGE, OIL FILLER	1	1					
26	E5500-51662	GASKET	1	1					
27	01023-50618	BOLT, WASHER	2	2					
28	01023-50622	BOLT, WASHER	2	2					HEX10*33
29	E5205-54271	CAP	1	1					
30	E5800-33144	PLUG, OIL FILLER	1	1					

----> Old replace New
<-X-> Not interchangeable
<-0-> Interchangeable with another part(s)
<---- New replace Old
<---> Interchangeable

4B243LX-E160 ENGINE STOP LEVER GROUP

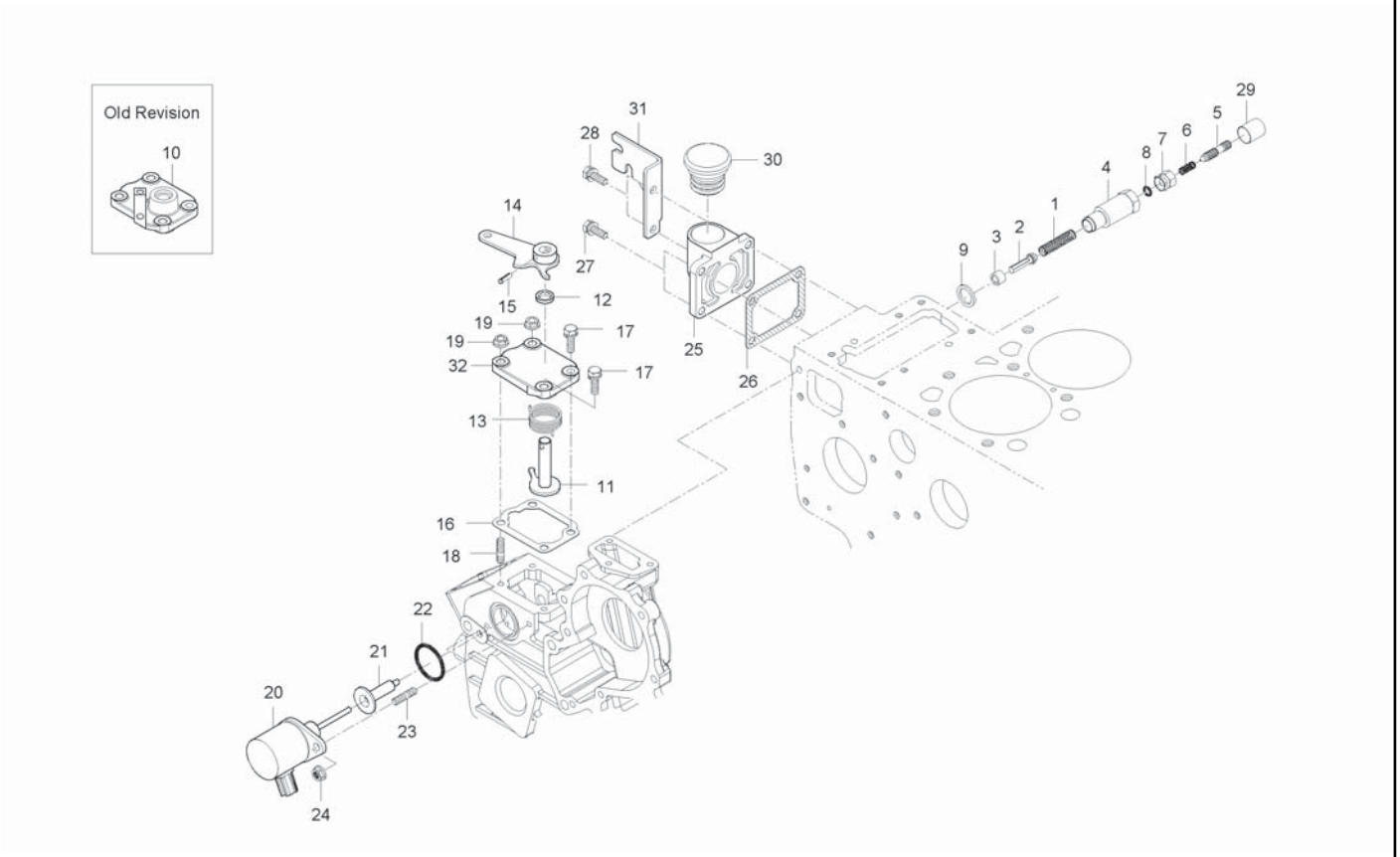

A : CK35-EU , B : CK35H-EU

No.	Part Number	Desciption	Q'TY A	Q'TY B	Q'TY C	Q'TY D	Q'TY E	I.C	Remark
1	E5850-54261	SPRING	1	1					
2	E5850-54272	SHAFT, IDLE ADJUSTMENT	1	1					
3	E5850-54282	BUSH	1	1					
4	E5850-54291	ADJUSTMENT BODY, IDLE	1	1					
5	E5850-54252	IDEL ADJUSTING BOLT	1	1					
6	15521-5426-1	SPRING	1	1					
7	E5850-92011	NUT	1	1					
8	04811-00060	O RING	1	1					
9	04724-00140	PACKING	1	1					
10	E5850-57112	PLATE, SPEED CONTROL	1	1					
11	E5850-57711	ENGINE STOP LEVER ASSY, 2	1	1					
11	E5850-57712	ENGINE STOP LEVER ASSY, 2	1	1				<----	
12	15471-5798-1	SEAL, OIL	1	1					
13	E5850-57921	SPRING	1	1					
14	E5850-57731	LEVER 1, ENGINE STOP	1	1					
15	05411-00420	PIN, SPRING	1	1					
16	E5850-57212	GASKET, SPEED CONTROL PLATE	1	1					
17	01023-50618	BOLT, WASHER	2	2					
17	01023-50616	BOLT, WASHER	2	2				<--->	M6*P1.0

----> Old replace New
<-X-> Not interchangeable
<-O-> Interchangeable with another part(s)
<---- New replace Old
<---> Interchangeable

4B243LX-E160 ENGINE STOP LEVER GROUP

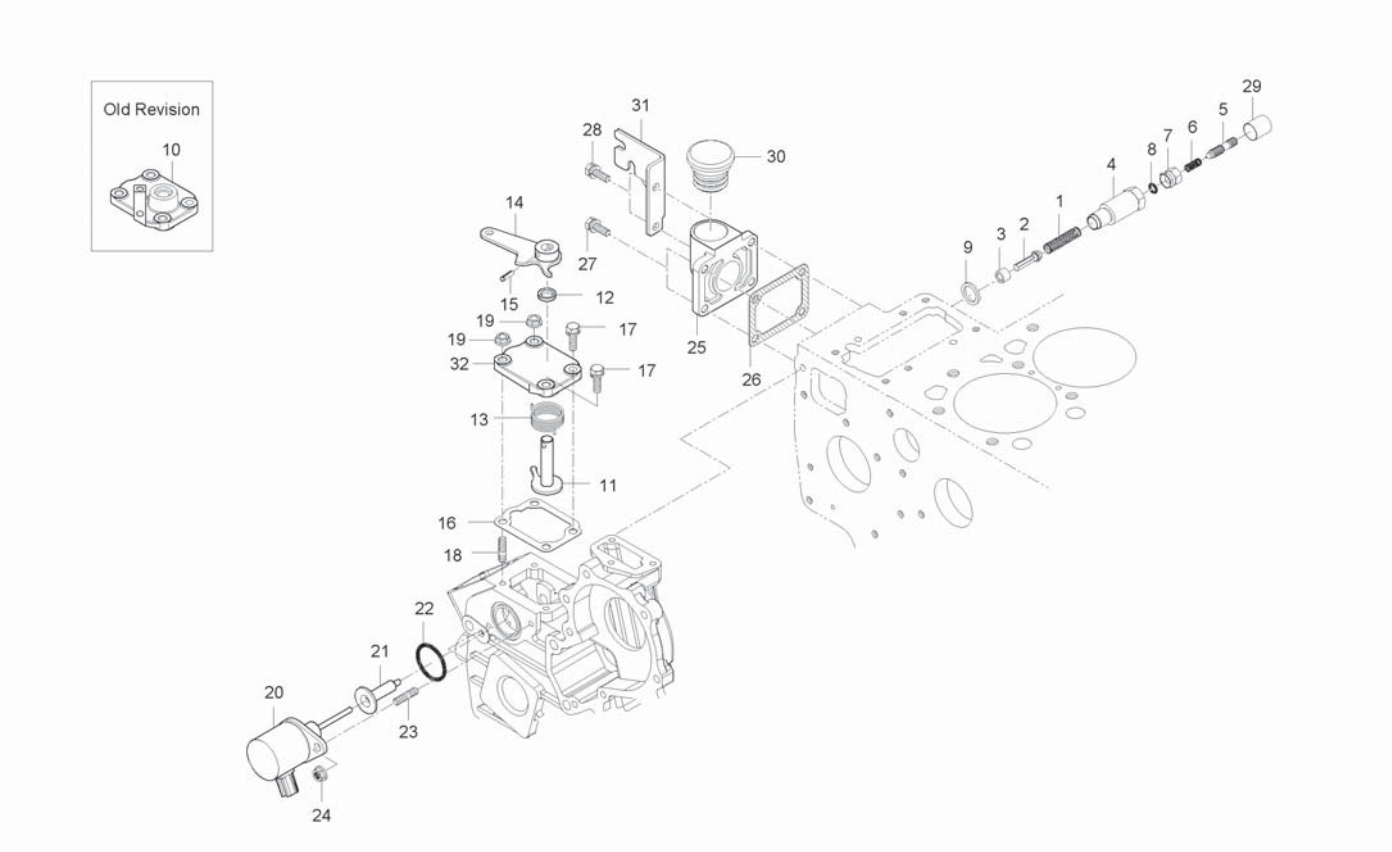

A : CK35-EU , B : CK35H-EU

No.	Part Number	Desciption	Q'TY A	Q'TY B	Q'TY C	Q'TY D	Q'TY E	I.C	Remark
17	01754-50616	BOLT, FLANGE	2	2				<----	M6*P1.0
18	15221-8821-1	STUD	2	2					
19	02751-50060	FLANGE NUT	2	2					M6*P1.0
20	E5850-60011	SOLENOID ASSY	1	1					
20	E6850-60012	SOLENOID, ENGINE STOP	1	1				<-X->	
20	E6820-60011	GROUP,ENGINE STOP SOLENOIDE	1	1				<--->	
21	E5850-56603	GUIDE, ENGINE STOP SOLENOID	1	1					
21	E5850-56604	ENGINE STOP SOLENOID GUIDE	1	1				<--->	
21	E5850-56605	ENGINE STOP SOLENOID GUIDE	1	1				<----	
22	04814-06310	O RING	1	1					
23	01513-50614	STUD	2	2					
24	02761-50060	FLANGE NUT	2	2					M6XP1.0
25	E5850-33111	FLANGE, OIL FILLER	1	1					
26	E5500-51662	GASKET	1	1					
27	01754-50616	BOLT, FLANGE	2	2					M6*P1.0
28	01023-50622	BOLT, WASHER	2	2					HEX10*33
28	01754-50620	BOLT, FLANGE	2	2				<----	
29	E5205-54271	CAP	1	1					
30	E5800-33144	PLUG, OIL FILLER	1	1					

----> Old replace New
<-X-> Not interchangeable
<-O-> Interchangeable with another part(s)
<---- New replace Old
<---> Interchangeable

4B243LX-E160

ENGINE STOP LEVER GROUP

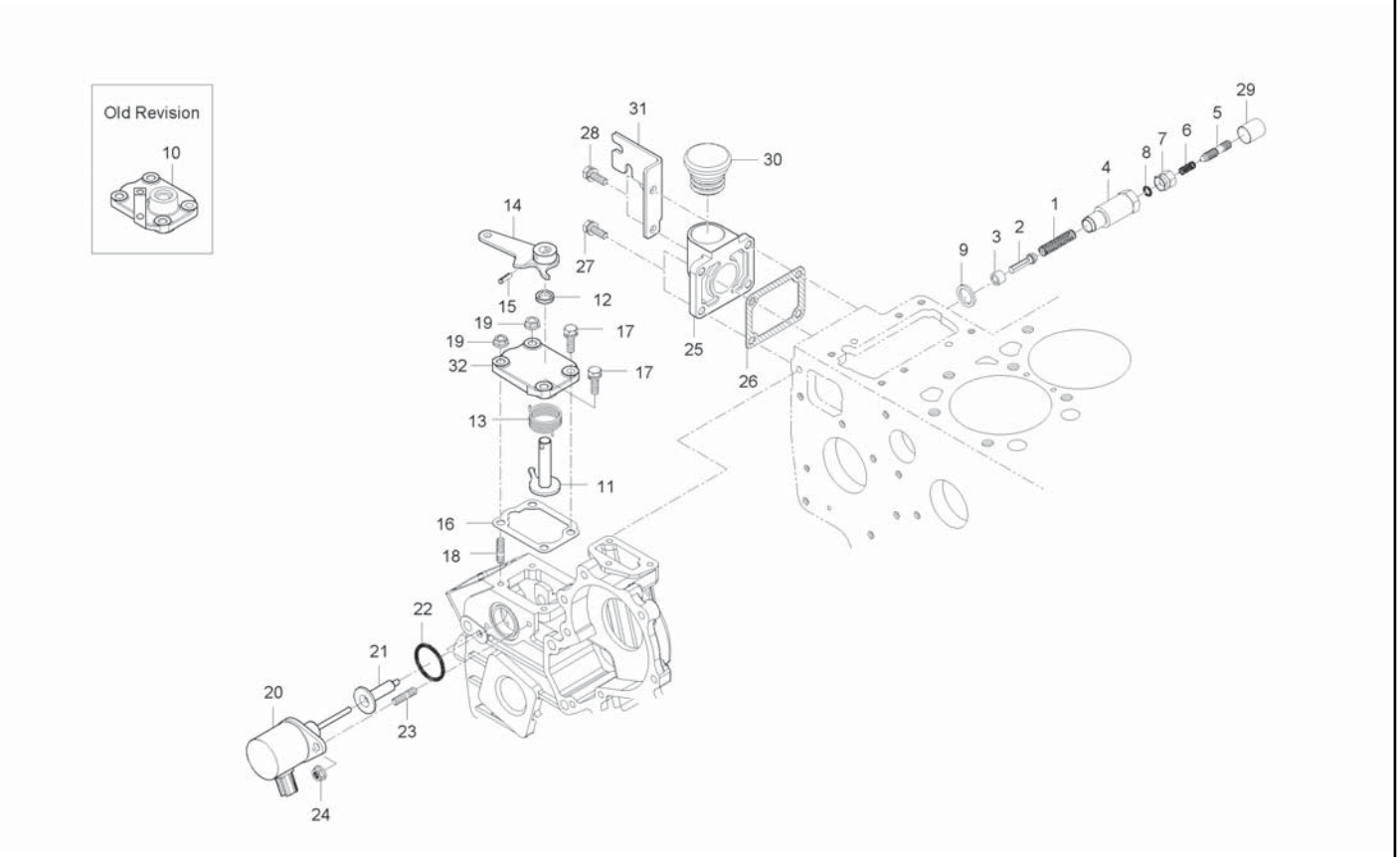

A : CK35-EU , B : CK35H-EU

No.	Part Number	Desciption	Q'TY A	Q'TY B	Q'TY C	Q'TY D	Q'TY E	I.C	Remark
31	E5850-57482	BRACKET, CABLE	1	1					
32	E6850-57311	COVER, ENGINE STOP LEVER	1	1					

----> Old replace New
<-X-> Not interchangeable
<-O-> Interchangeable with another part(s)
<---- New replace Old
<---> Interchangeable

3A150LX-E170 GROUP,GOVERNOR

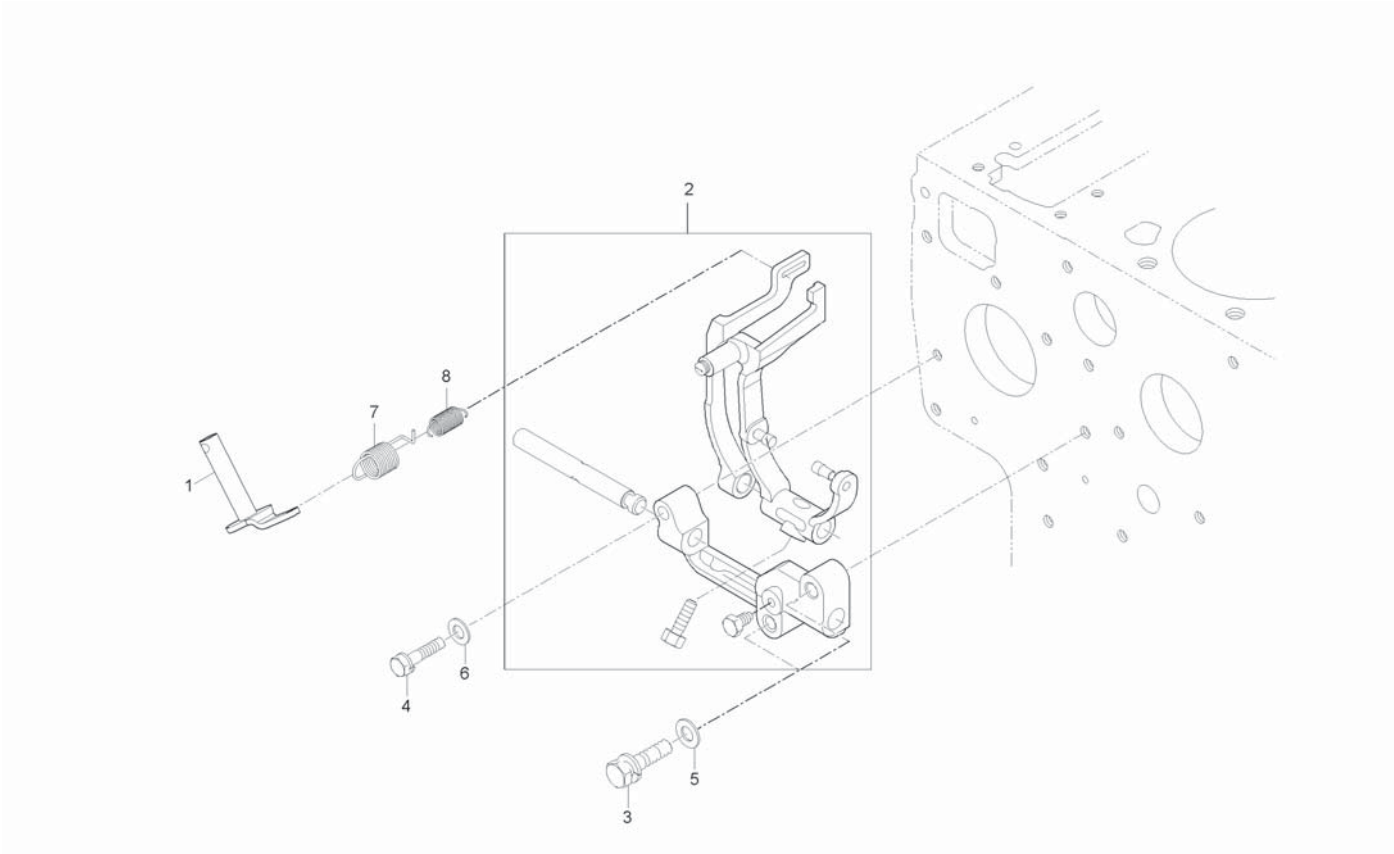

A : CK35-EU , B : CK35H-EU

No.	Part Number	Desciption	Q'TY A	Q'TY B	Q'TY C	Q'TY D	Q'TY E	I.C	Remark
1	E5850-56021	GOVERNOR LEVER ASSY	1	1					
2	E5627-56051	FORK LEVER ASSY	1	1					
3	01123-50832	BOLT, WASHER	2	2					HEX12*43
3	01754-50830	BOLT, FLANGE	2	2				<--->	M8*P1.25
4	01023-50628	BOLT, WASHER	1	1					HEX10*38
5	04012-50080	WASHER, PLAIN	2	2					DIA18*T1.2
6	04012-50060	WASHER, PLAIN	1	1					M6
7	E6300-56414	SPRING 1, GOVERNOR	1	1					
8	E6313-56421	SPRING 2, GOVERNOR	1	1					

----> Old replace New
<-X-> Not interchangeable
<-O-> Interchangeable with another part(s)
<---- New replace Old
<---> Interchangeable

3A150LX-E180

WATER PUMP GROUP

(CK35-EU : ~ FT8100016)

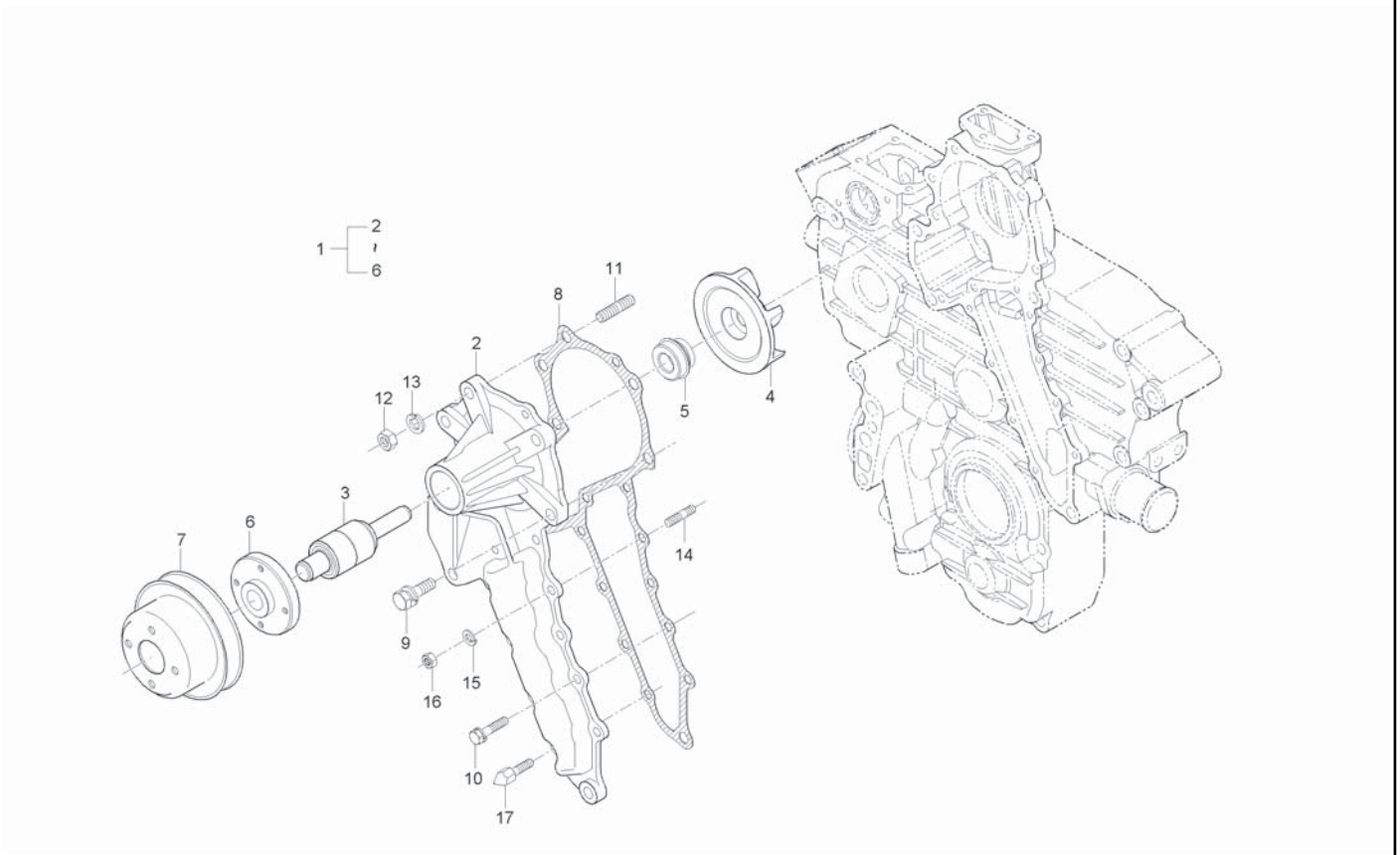

A : CK35-EU , B : CK35H-EU

No.	Part Number	Desciption	Q'TY A	Q'TY B	Q'TY C	Q'TY D	Q'TY E	I.C	Remark
1	E5627-73031	WATER PUMP ASSY	1						
2	E5627-73411	BODY, WATER PUMP	1						
3	E5800-73551	BEARING, WATER PUMP	1						
4	E5800-73513	IMPELLER	1						
5	E5800-73052	MECHANICAL SEAL ASSY	1						
6	E5627-73521	FLANGE	1						
7	E5616-74252	FAN PULLEY	1 ~HT8100038						
7	E5616-74252ED	PULLEY, FAN	1 HT8100039~					<-X->	
8	E5627-73432	GASKET, WATER PUMP	1						
9	01123-50828	BOLT, WASHER	4						
10	01023-50618	BOLT, WASHER	7						
11	01518-50822	STUD	1						
12	02156-50080	NUT	1						
13	04512-50080	SPRING WASHER	1						
14	15221-8821-1	STUD	1						
15	04512-50060	WASHER, SPRING	1						
16	02056-50060	NUT	1						
17	E6201-50619	TIMING BOLT	1						

----> Old replace New
<-X-> Not interchangeable
<-O-> Interchangeable with another part(s)
<---- New replace Old
<---> Interchangeable

3A165LXB-E180 WATER PUMP GROUP

(CK35-EU : GT8100001 ~)

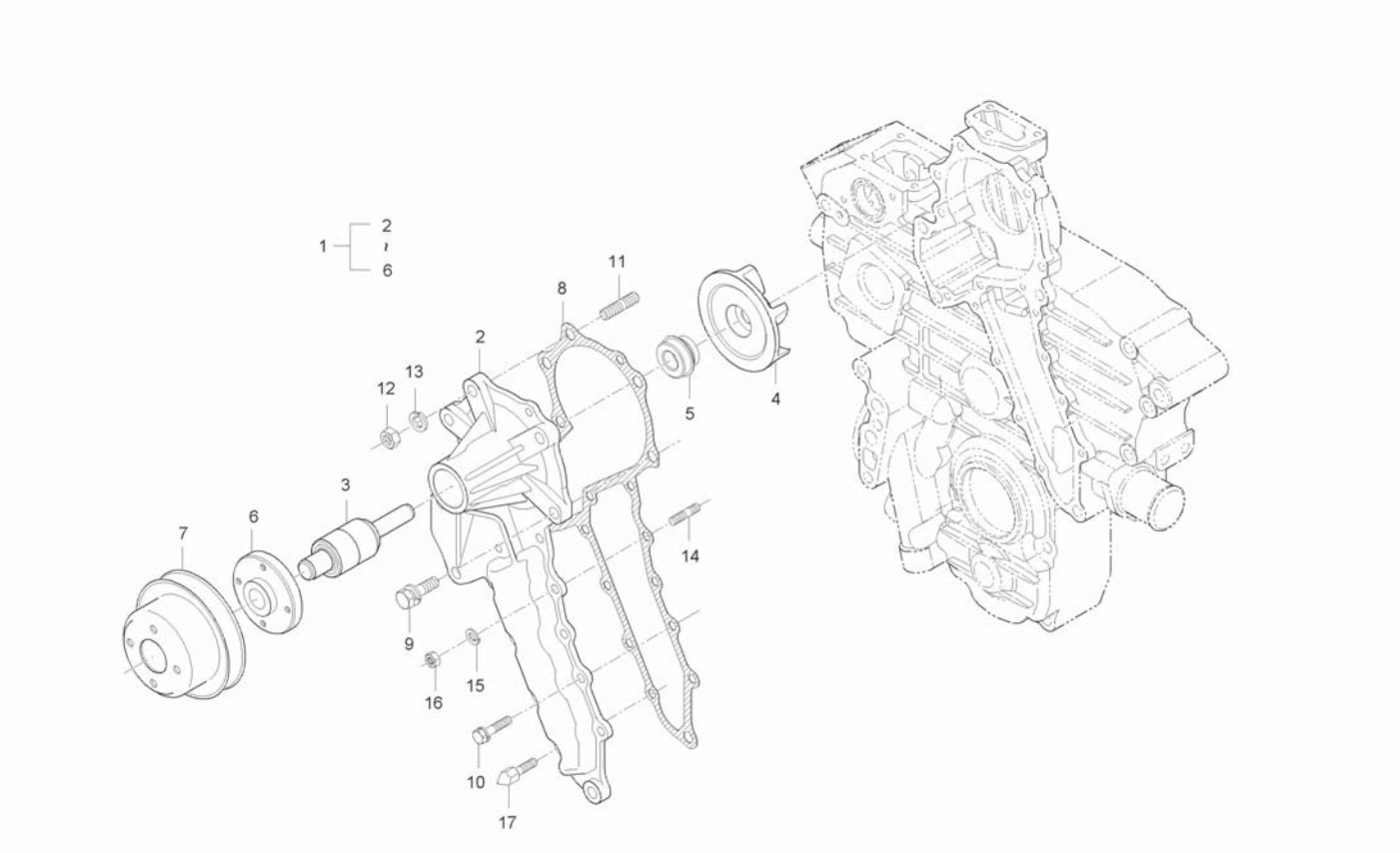

A : CK35-EU , B : CK35H-EU

No.	Part Number	Desciption	Q'TY A	Q'TY B	Q'TY C	Q'TY D	Q'TY E	I.C	Remark
1	E5627-73031	WATER PUMP ASSY	1	1					
1	E5627-73032	WATER PUMP ASSY	1	1				<--->	
2	E5627-73411	BODY, WATER PUMP	1	1					
3	E5800-73551	BEARING, WATER PUMP	1	1					
4	E5800-73513	IMPELLER	1	1					
5	E5800-73052	MECHANICAL SEAL ASSY	1	1					
6	E5627-73521	FLANGE	1	1					
6	E5627-73522	FLANGE	1	1				<--->	
7	E5800-74252	FAN PULLEY	1 ~HT8100038	1 ~HT8900076					
7	E5800-74252ED	PULLEY, FAN	1 HT8100039~	1 JT8900001~				<-X->	
8	E5627-73432	GASKET, WATER PUMP	1	1					
9	01123-50828	BOLT, WASHER	4	4					
10	01023-50618	BOLT, WASHER	7	7					
11	01518-50822	STUD	1	1					
12	02156-50080	NUT	1	1					M8XP1.25
13	04512-50080	SPRING WASHER	1	1					M08
14	15221-8821-1	STUD	1	1					
15	04512-50060	WASHER, SPRING	1	1					M6
16	02056-50060	NUT	1	1					M6*P1.0

----> Old replace New
<-X-> Not interchangeable
<-O-> Interchangeable with another part(s)
<---- New replace Old
<---> Interchangeable

3A165LXB-E180

WATER PUMP GROUP

(CK35-EU : GT8100001 ~)

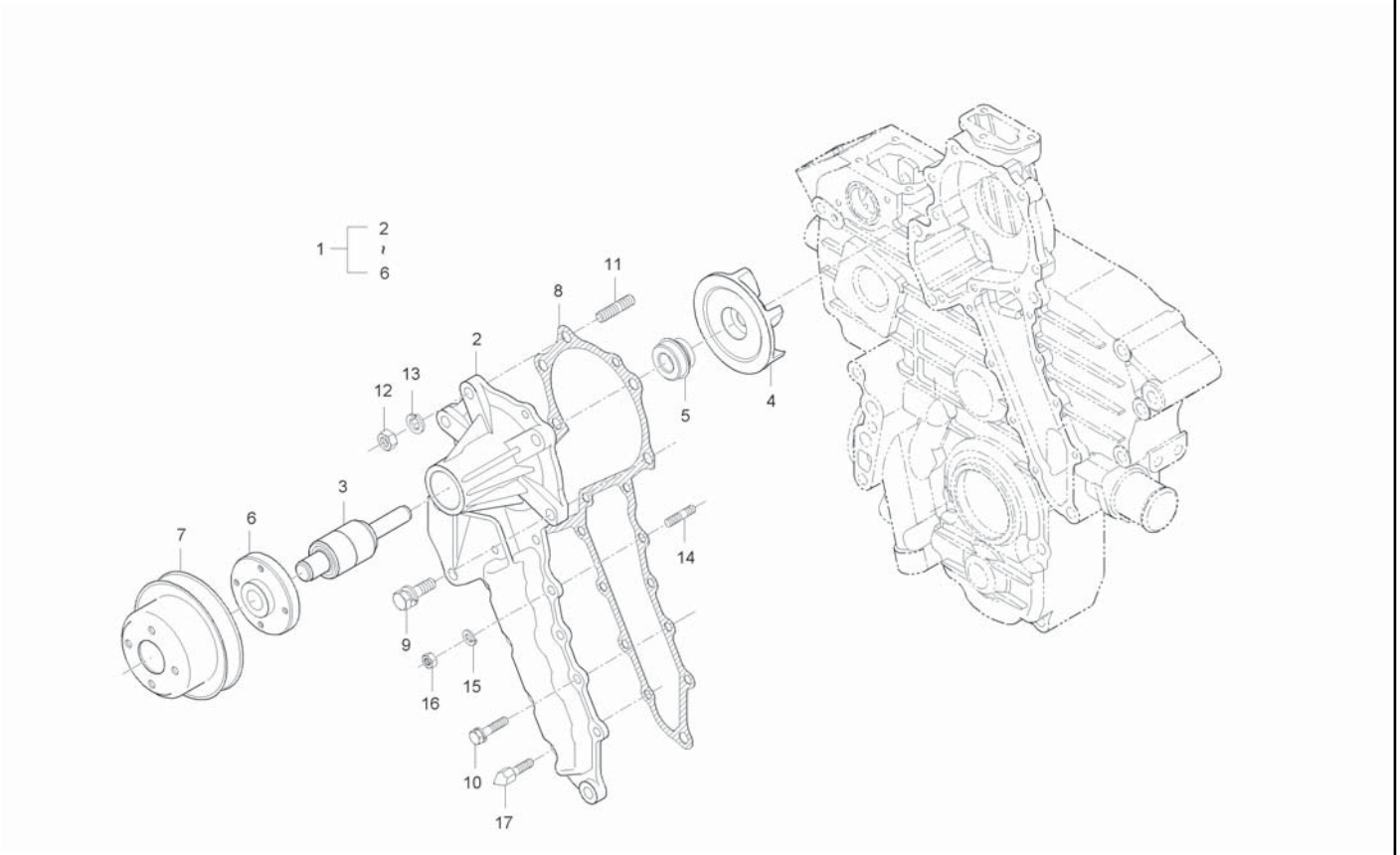

A : CK35-EU , B : CK35H-EU

No.	Part Number	Desciption	Q'TY A	Q'TY B	Q'TY C	Q'TY D	Q'TY E	I.C	Remark
17	E6201-50619	TIMING BOLT	1	1					

----> Old replace New
<-X-> Not interchangeable
<-O-> Interchangeable with another part(s)
<---- New replace Old
<---> Interchangeable

3A150E-E190

WATER HOSE GROUP

(CK35-EU : ~ FT8100016)

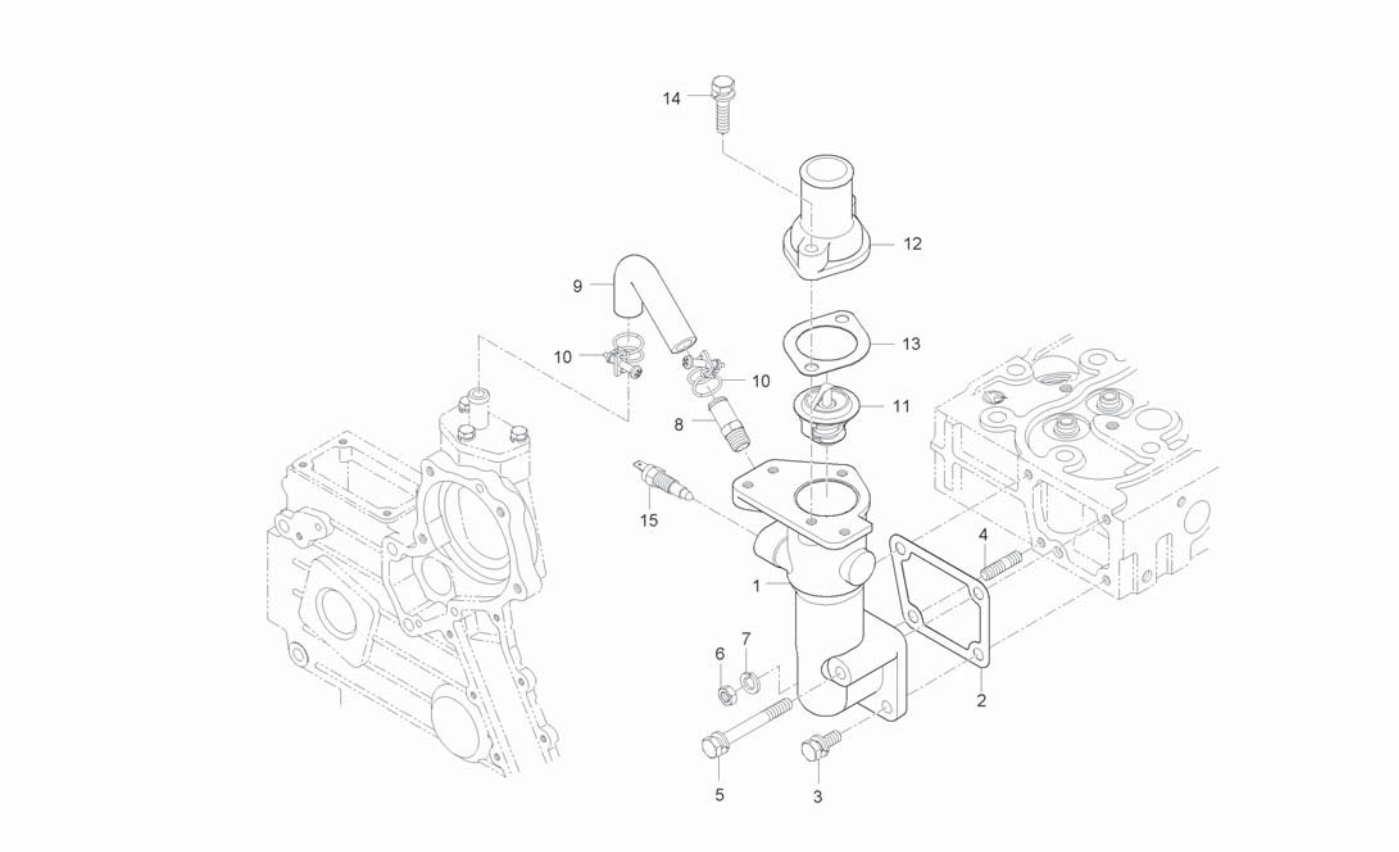

A : CK35-EU , B : CK35H-EU

No.	Part Number	Desciption	Q'TY A	Q'TY B	Q'TY C	Q'TY D	Q'TY E	I.C	Remark
1	E5800-72914	FLANGE, COOLING WATER	1						
2	E5500-72922	GASKET, FLANGE	1						
3	01123-50822	BOLT	2						
3	01754-50820	FLANGE BOLT	2					<--->	
4	01513-50822	STUD	1						
5	01123-50870	BOLT, WASHER	1						
6	02156-50080	NUT	1						
6	02763-50080	FLANGE NUT	1					<--->	
7	04512-50080	SPRING WASHER	1						
8	E5500-73342	HOSE, COOLING WATER RETURN	1						
9	E5627-73341	HOSE, WATER PUMP	1						
10	09318-88180	CLMAP, HOSE	2						
11	E5800-73011	THERMOSTAT ASSY	1						
12	E5500-73263	COVER, THERMOSTAT	1						
13	E5500-73272	GASKET	1						
14	01123-50835	BOLT, WASHER	2						
14	01754-50835	BOLT, FLANGE	2					<--->	
15	T4340-38751	SENSOR, TEMPERATURE	1						

----> Old replace New
<-X-> Not interchangeable
<-O-> Interchangeable with another part(s)
<---- New replace Old
<---> Interchangeable

3A165LXB-E190 WATER HOSE GROUP

(CK35-EU : GT8100001 ~)

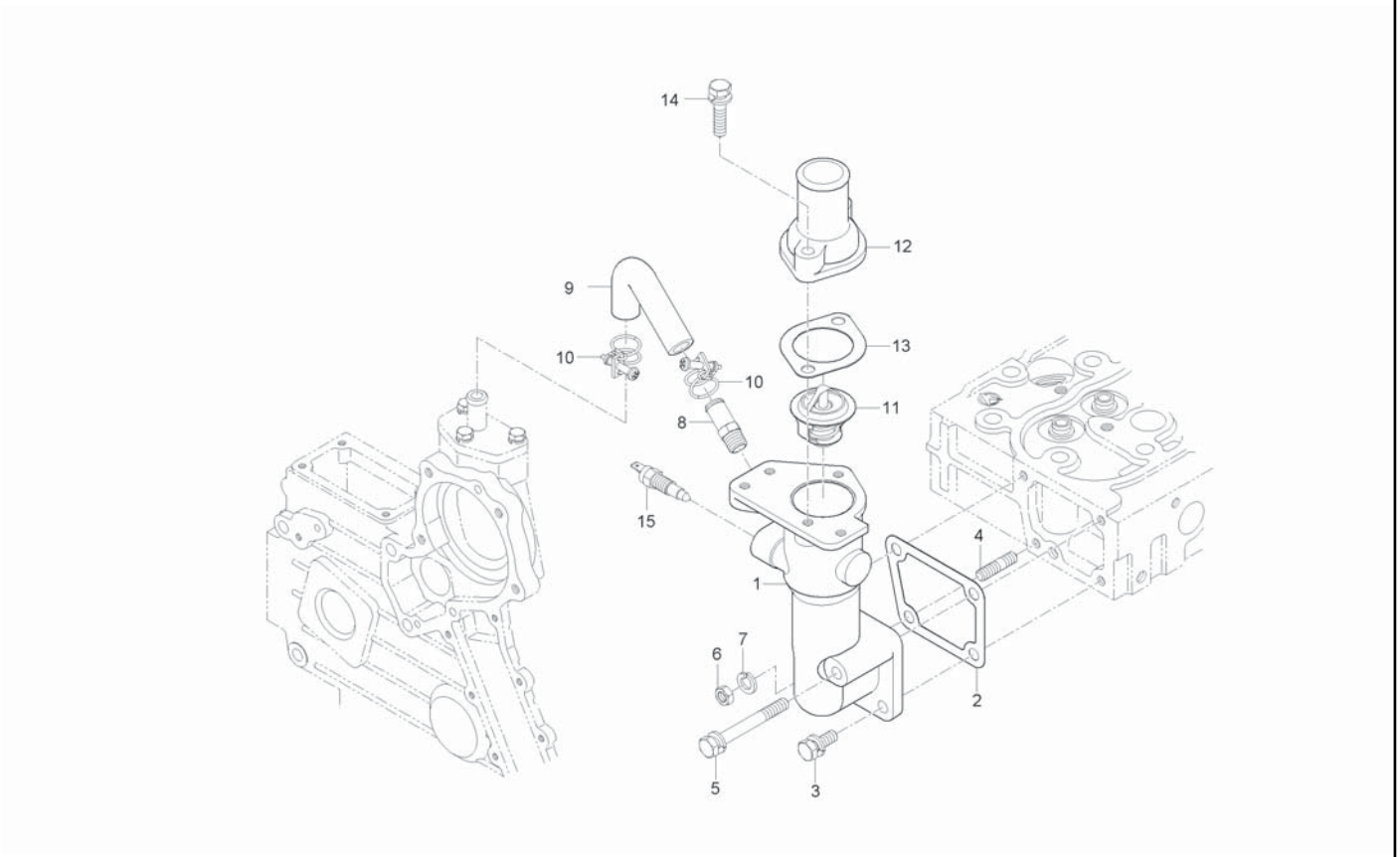

A : CK35-EU , B : CK35H-EU

No.	Part Number	Desciption	Q'TY A	Q'TY B	Q'TY C	Q'TY D	Q'TY E	I.C	Remark
1	E5640-72911	FLANGE, COOLING WATER	1	1					
2	E5500-72922	GASKET, FLANGE	1	1					
3	01123-50822	BOLT	2	2					M8XP1.25
3	01754-50820	FLANGE BOLT	2	2				<--->	M8*P1.25
4	01513-50822	STUD	1	1					M8*1.25
5	01123-50870	BOLT, WASHER	1	1					
5	01754-50870	BOLT, FLANGE	1	1				<--->	M8*P1.25
6	02156-50080	NUT	1	1					M8XP1.25
6	02763-50080	FLANGE NUT	1	1				<--->	M8XP1.25
7	04512-50080	SPRING WASHER	1	1					M08
8	E5500-73342	HOSE, COOLING WATER RETURN	1	1					
9	E5627-73341	HOSE, WATER PUMP	1	1					
10	09318-88180	CLMAP, HOSE	2	2					
11	E5800-73011	THERMOSTAT ASSY	1	1					
12	E5500-73263	COVER, THERMOSTAT	1	1					
13	E5500-73272	GASKET	1	1					
14	01123-50835	BOLT, WASHER	2	2					M8X1.25
14	01754-50835	BOLT, FLANGE	2	2				<--->	
15	E7240-32731	TEMPERATURE SENSOR ASSY	1	1					

----> Old replace New
<-X-> Not interchangeable
<-O-> Interchangeable with another part(s)
<---- New replace Old
<---> Interchangeable

3A150LX-E200 ALTERNATOR GROUP

(CK35-EU : ~ FT8100016)

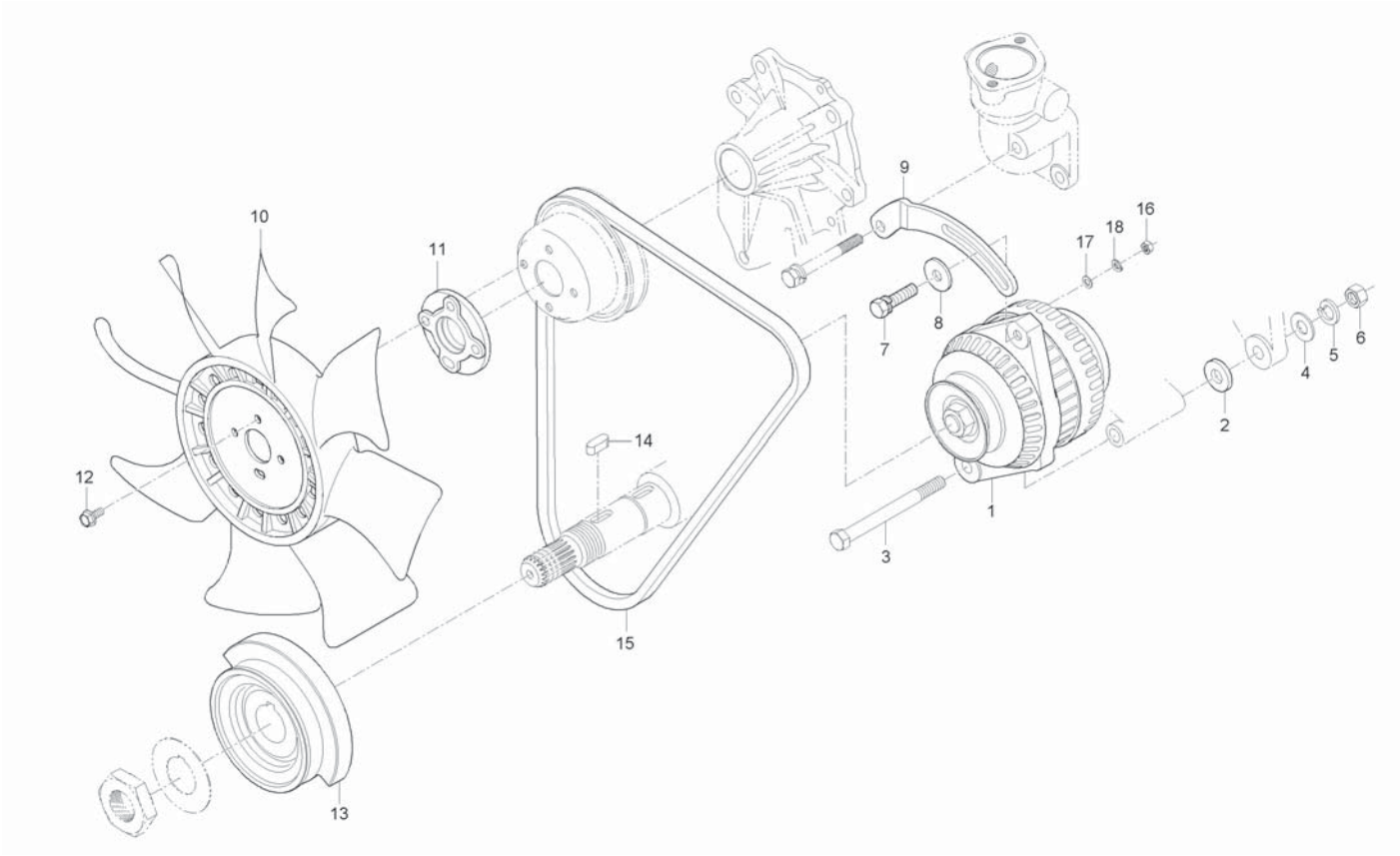

A : CK35-EU , B : CK35H-EU

No.	Part Number	Desciption	Q'TY A	Q'TY B	Q'TY C	Q'TY D	Q'TY E	I.C	Remark
1	E7230-64012	ALTERNATOR ASSY	1						
2	E5800-64102	COLLAR, AC BATTERY	1						
3	01173-51005	BOLT	1						
4	04013-50100	WASHER, PLAIN	1						
5	04512-50100	WASHER, SPRING	1						
6	02176-50100	NUT	1						
7	01123-50832	BOLT, WASHER	1						
8	04015-50080	WASHER, PLAIN	1						
9	E5629-64421	SUPPORT, ALTERNATOR	1						
10	E5629-74111	FAN, COOLING	1						
11	E6520-74151	FAN COLLAR	1						
12	01754-50620	BOLT, FLANGE	4						
13	E5627-74282	PULLEY, FAN DRIVE	1						
14	05712-00720	KEY	1						
15	E5620-72532	BELT,FAN	1						
16	02054-50050	NUT	1						
17	04012-50050	WASHER, PLAIN	1						
18	04512-50050	WASHER, SPRING	1						

----> Old replace New
<-X-> Not interchangeable
<-O-> Interchangeable with another part(s)
<---- New replace Old
<---> Interchangeable

3A165LXB-E200 ALTERNATOR GROUP

(CK35-EU : GT8100001 ~)

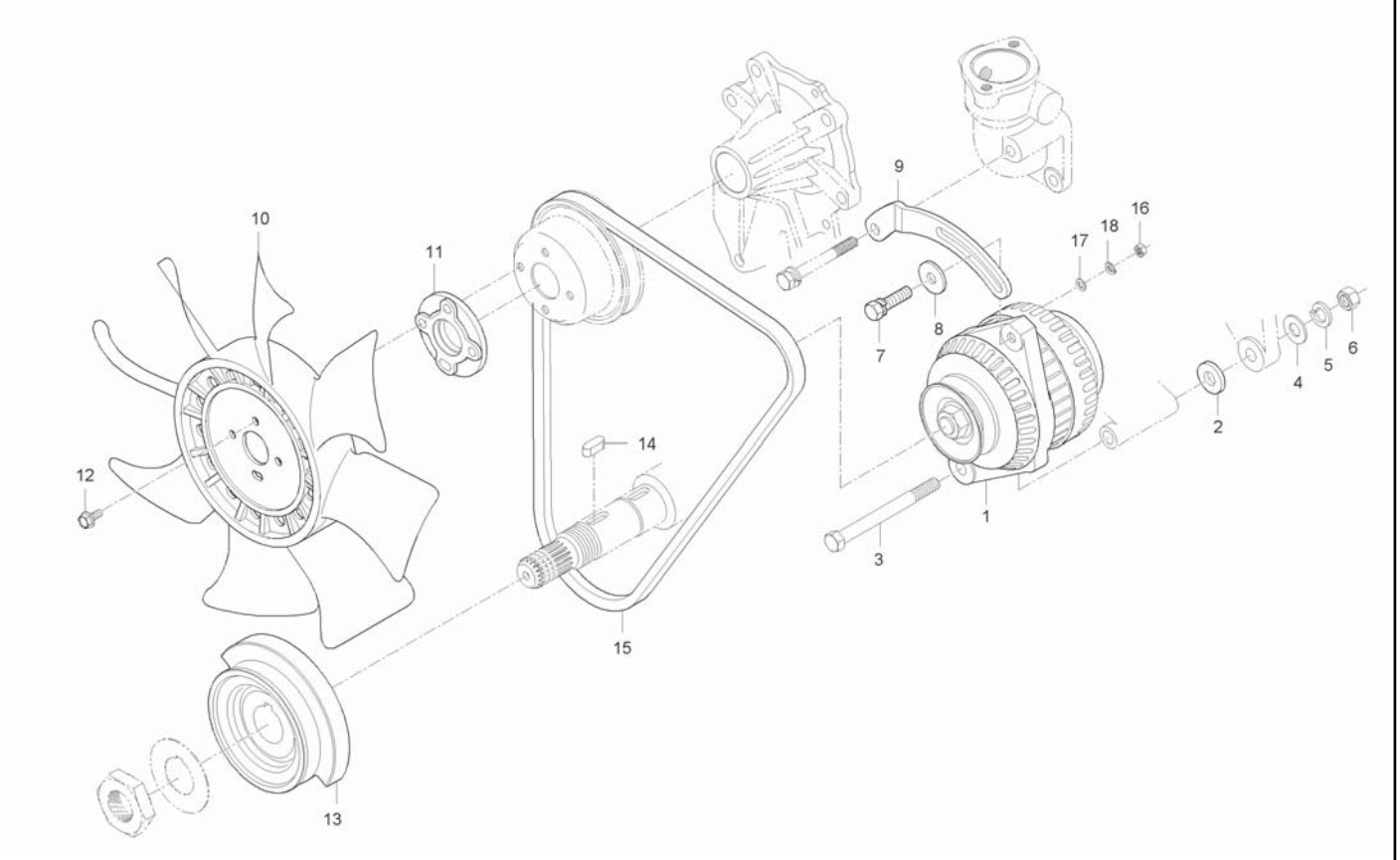

A : CK35-EU , B : CK35H-EU

No.	Part Number	Desciption	Q'TY A	Q'TY B	Q'TY C	Q'TY D	Q'TY E	I.C	Remark
1	E7230-64012	ALTERNATOR ASSY	1	1					
2	E5800-64102	COLLAR, AC BATTERY	1	1					
3	01173-51005	BOLT	1	1					
4	04013-50100	WASHER, PLAIN	1	1					M10
5	04512-50100	WASHER, SPRING	1	1					M10
6	02176-50100	NUT	1	1					M10X1.25
7	01123-50832	BOLT, WASHER	1	1					HEX12*43
8	04015-50080	WASHER, PLAIN	1	1					T2.6
9	E5629-64421	SUPPORT, ALTERNATOR	1	1					
10	E5629-74111	FAN, COOLING	1	1					
11	E6520-74151	FAN COLLAR	1	1					
12	01754-50620	BOLT, FLANGE	4	4					
13	E5640-74281	PULLEY, FAN DRIVE	1	1					
13	E5640-74282	PULLEY, FAN DRIVE	1	1				<--->	
14	05712-00720	KEY	1	1					8*8*24
15	E5640-72531	BELT,FAN	1	1					
16	02054-50050	NUT	1	1					M5*P1.0
17	04012-50050	WASHER, PLAIN	1	1					
18	04512-50050	WASHER, SPRING	1	1					M5

----> Old replace New
<-X-> Not interchangeable
<-O-> Interchangeable with another part(s)
<---- New replace Old
<---> Interchangeable

3A150E-E220

MANIFOLD GROUP

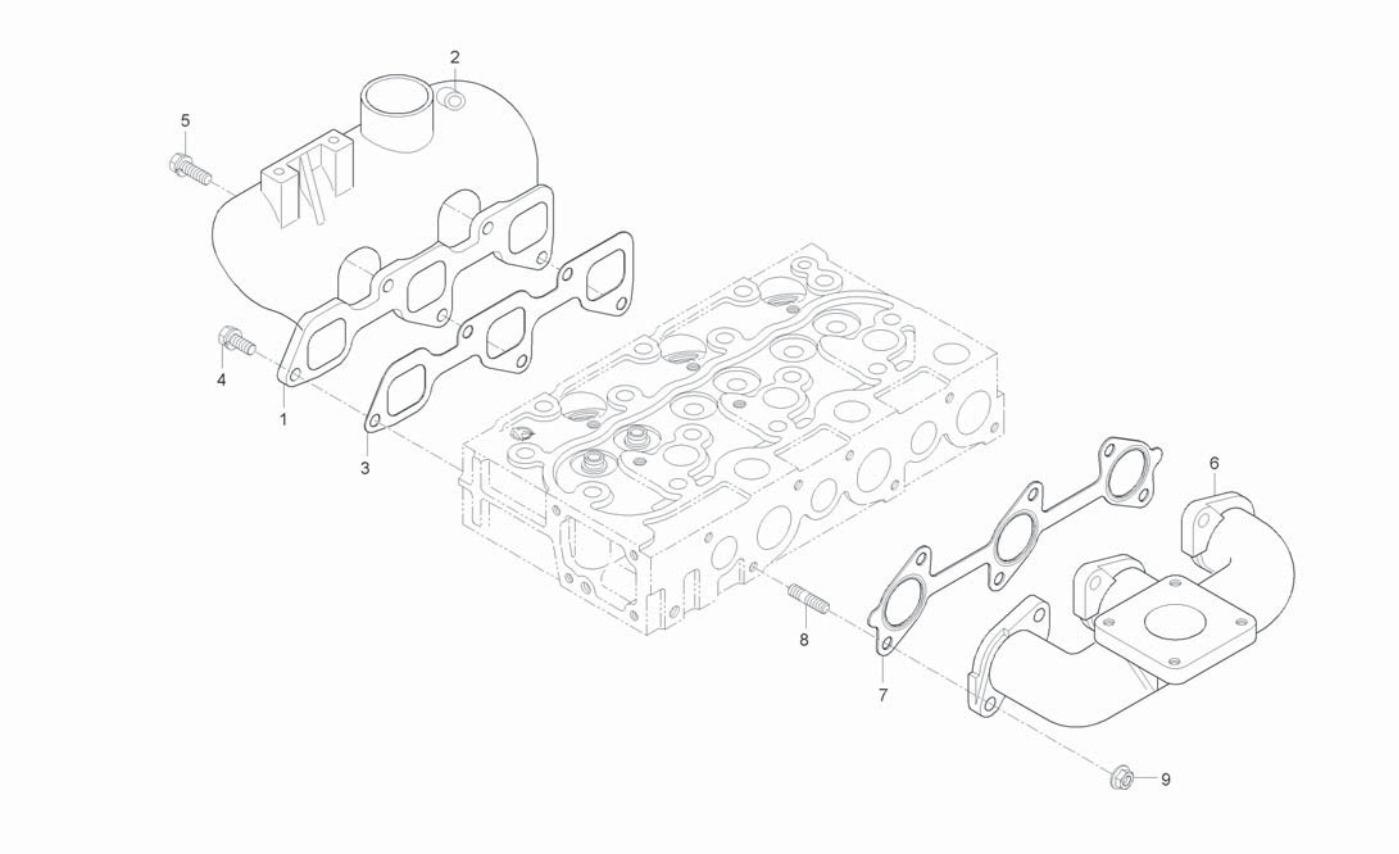

A : CK35-EU , B : CK35H-EU

No.	Part Number	Desciption	Q'TY A	Q'TY B	Q'TY C	Q'TY D	Q'TY E	I.C	Remark
1	E5800-11766	MANIFOLD, INTAKE	1	1					
2	E6510-05551	CONNECTOR, AIR BREATHER HOSE	1	1					
2	E6510-05552	CONNECTOR, AIR BREATHER HOSE	1	1				<----	
3	E5800-11822	GASKET, INTAKE MANIFOLD	1	1					
4	01123-50822	BOLT	3	3					M8XP1.25
5	01123-50825	BOLT, WASHER	2	2					M8*P1.25
6	E5619-12311	EXHAUST MANIFOLD	1	1					
7	E5800-12352	GASKET, EXHAUST MANIFOLD	1	1					
8	01513-50822	STUD	6	6					M8*1.25
9	02751-50080	FLANGE NUT	6	6					M8X1.25

----> Old replace New
<-X-> Not interchangeable
<-O-> Interchangeable with another part(s)
<---- New replace Old
<---> Interchangeable

CK30M-T510A

FRONT AXLE SUPPORT GROUP

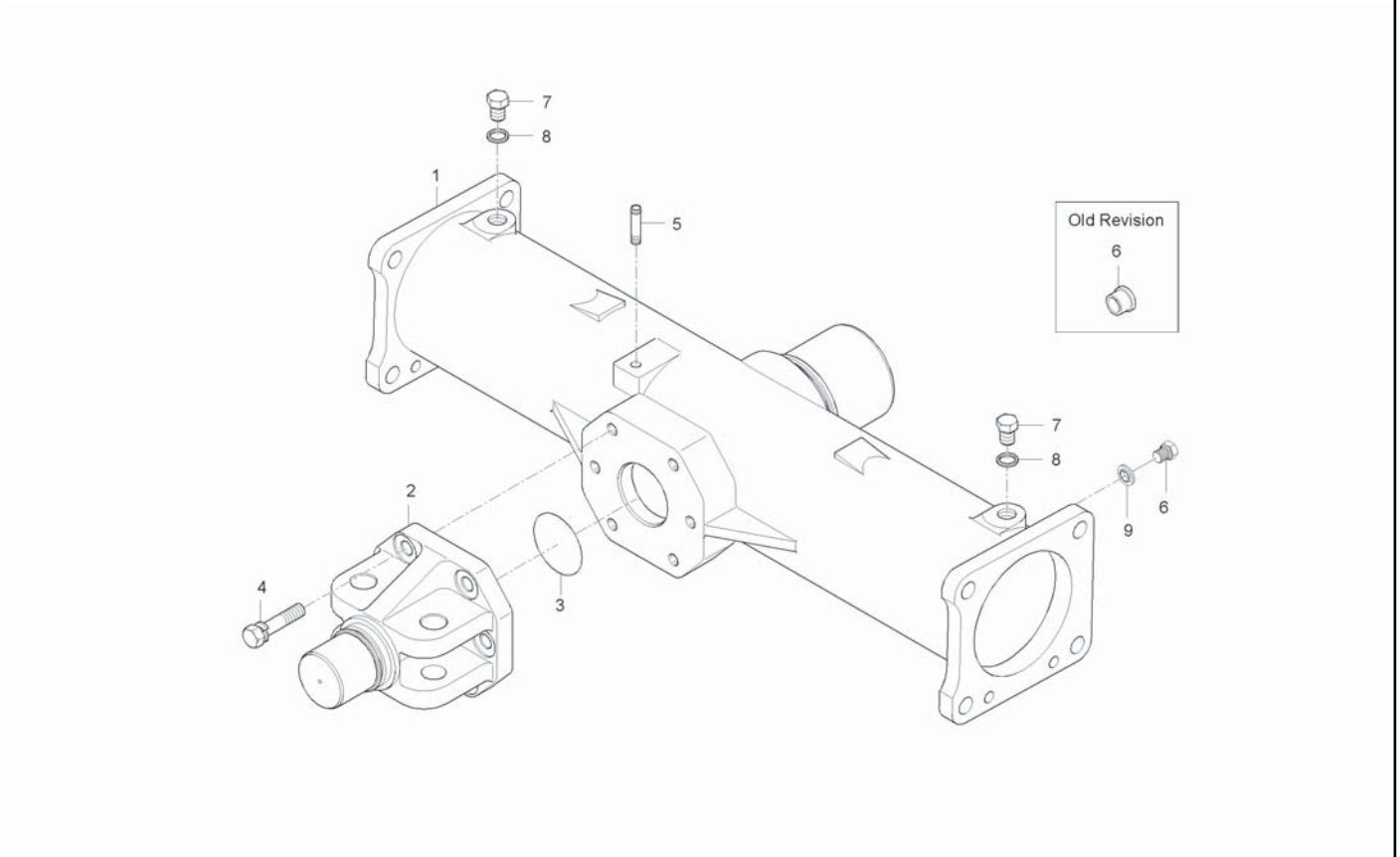

A : CK35-EU , B : CK35H-EU

No.	Part Number	Desciption	Q'TY A	Q'TY B	Q'TY C	Q'TY D	Q'TY E	I.C	Remark
1	T2185-42142	SUPPORT, FRONT AXLE	1						
1	T2185-42143	SUPPORT, FRONT AXLE	1	1				<--->	
2	T2630-41654	PIN, CENTER	1	1					
3	04811-00490	O RING	1	1					
4	01133-51235	BOLT, WASHER	6	6					M12*P1.25
5	T2630-42161	CONNECTIOR, AIR BREATHER	1	1					
6	T4680-14211	OIL GAUGE	1						
6	06331-45010	PLUG	1	1				<--->	M10*1.25
7	34150-1426-1	PLUG, OIL DRAIN	1	1					
8	04717-02150	WASHER, SEAL	1	1					
9	04717-01000	WASHER, SEAL	1	1					M10

----> Old replace New
<-X-> Not interchangeable
<-O-> Interchangeable with another part(s)
<---- New replace Old
<---> Interchangeable

CK30M-T520A

FRONT DIFF SYSTEM GROUP

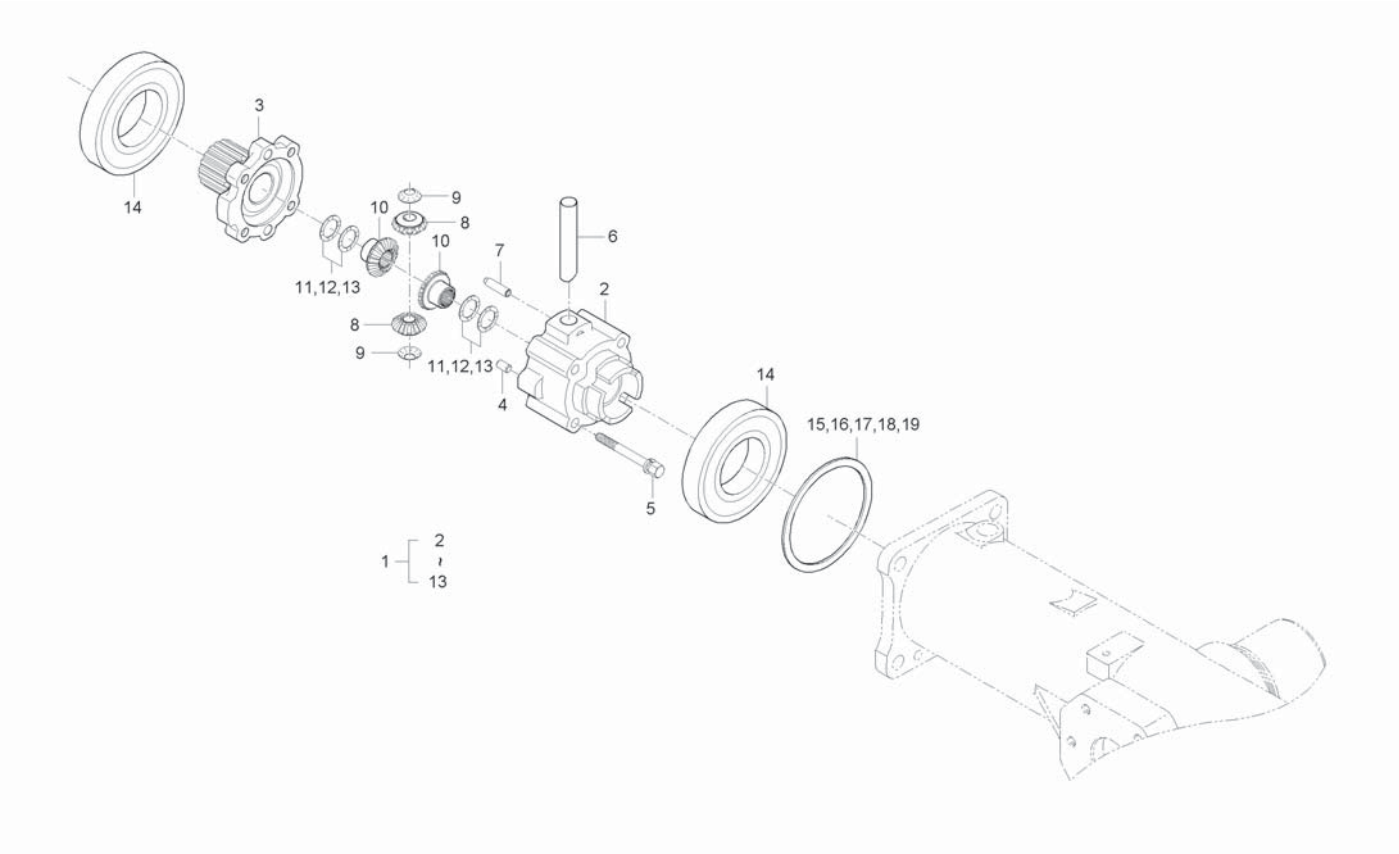

A : CK35-EU , B : CK35H-EU

No.	Part Number	Desciption	Q'TY A	Q'TY B	Q'TY C	Q'TY D	Q'TY E	I.C	Remark
1	T2630-43101	FRONT DIFFERENTIAL ASSY	1	1					
1	T2630-43102	FRONT DIFFERENTIAL ASSY	1	1				<--->	
2	T2630-43121	CASE, DIFFE FR	1	1					
3	T2630-42321	COVER, DIFFERENTIAL CASE	1	1					
4	05012-01018	PIN, PARALLEL	2	2					
5	01133-51075	BOLT, WASHER	4	4					
6	T2630-43111	SHAFT, DIFFERENTIAL PINION	1	1					
7	T4520-43171	PIN, PARALLEL	1	1					
8	T4520-43131	PINION, DIFFERENTIAL	2	2					
8	T4682-43132	PINION, DIFFERENTIAL	2	2				<--->	
9	T4520-43151	WASHER, DIFF PINION	2	2					
10	T4520-43141	GEAR, DIFF SIDE	2	2					
11	T4520-43071	SHIM, 0.8	2	2					
12	T4520-43081	SHIM, 0.1	2	2					
13	T4520-43091	SHIM, 1.2	2	2					
14	08101-06212	BALL BEARING	2	2					
15	T2630-43011	SHIM, 0.8	1	1					
16	T2630-43021	SHIM, 0.1	1	1					
17	T2630-43031	SHIM, 1.2	1	1					

----> Old replace New
<-X-> Not interchangeable
<-O-> Interchangeable with another part(s)
<---- New replace Old
<---> Interchangeable

CK30M-T520A

FRONT DIFF SYSTEM GROUP

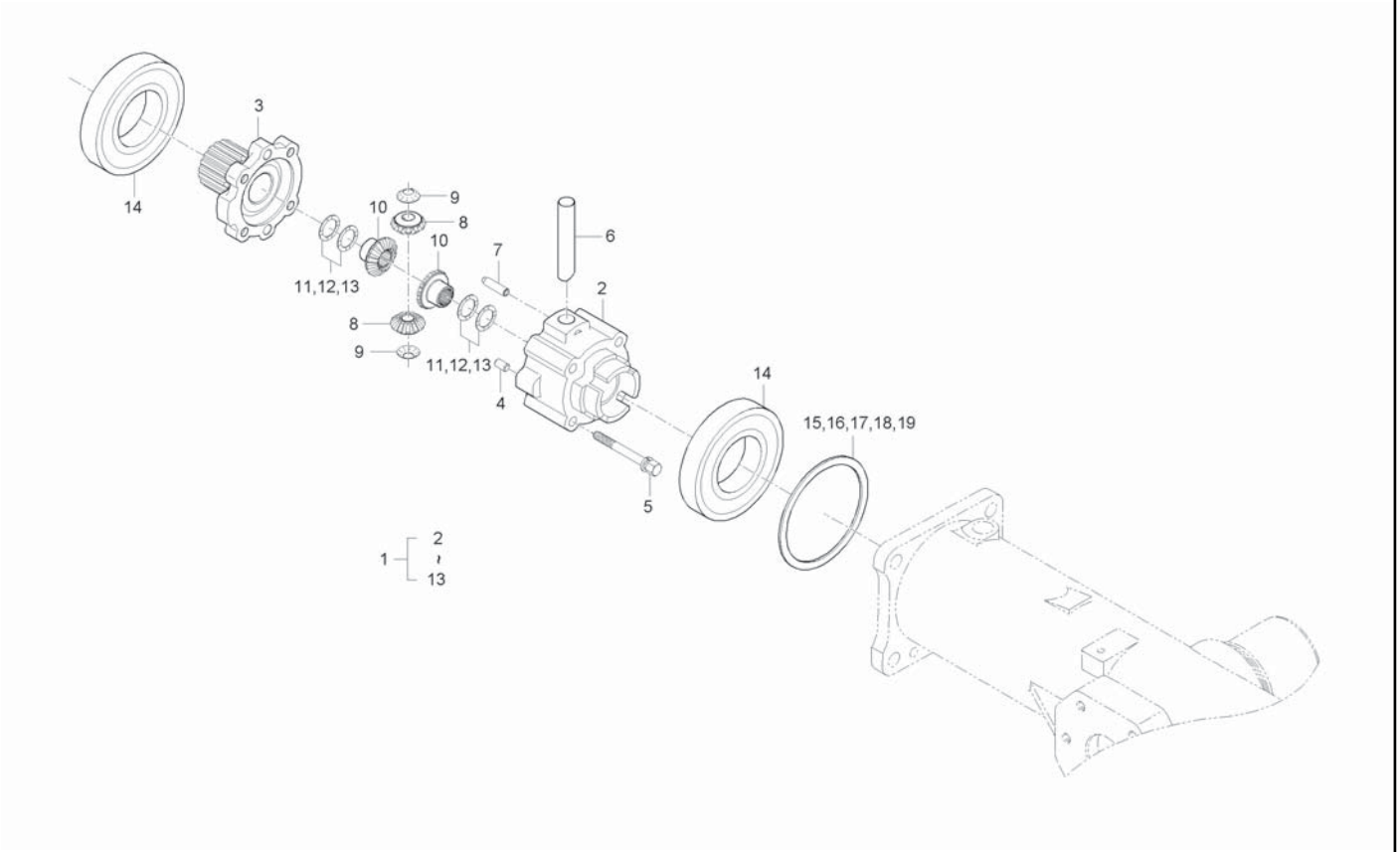

A : CK35-EU , B : CK35H-EU

No.	Part Number	Desciption	Q'TY A	Q'TY B	Q'TY C	Q'TY D	Q'TY E	I.C	Remark
18	T2630-43041	SHIM, 2.0	1	1					
19	T2630-43051	SHIM, 2.3	1	1					

----> Old replace New
<-X-> Not interchangeable
<-O-> Interchangeable with another part(s)
<---- New replace Old
<---> Interchangeable

CK30M-T530A

BEVEL PINION SHAFT GROUP

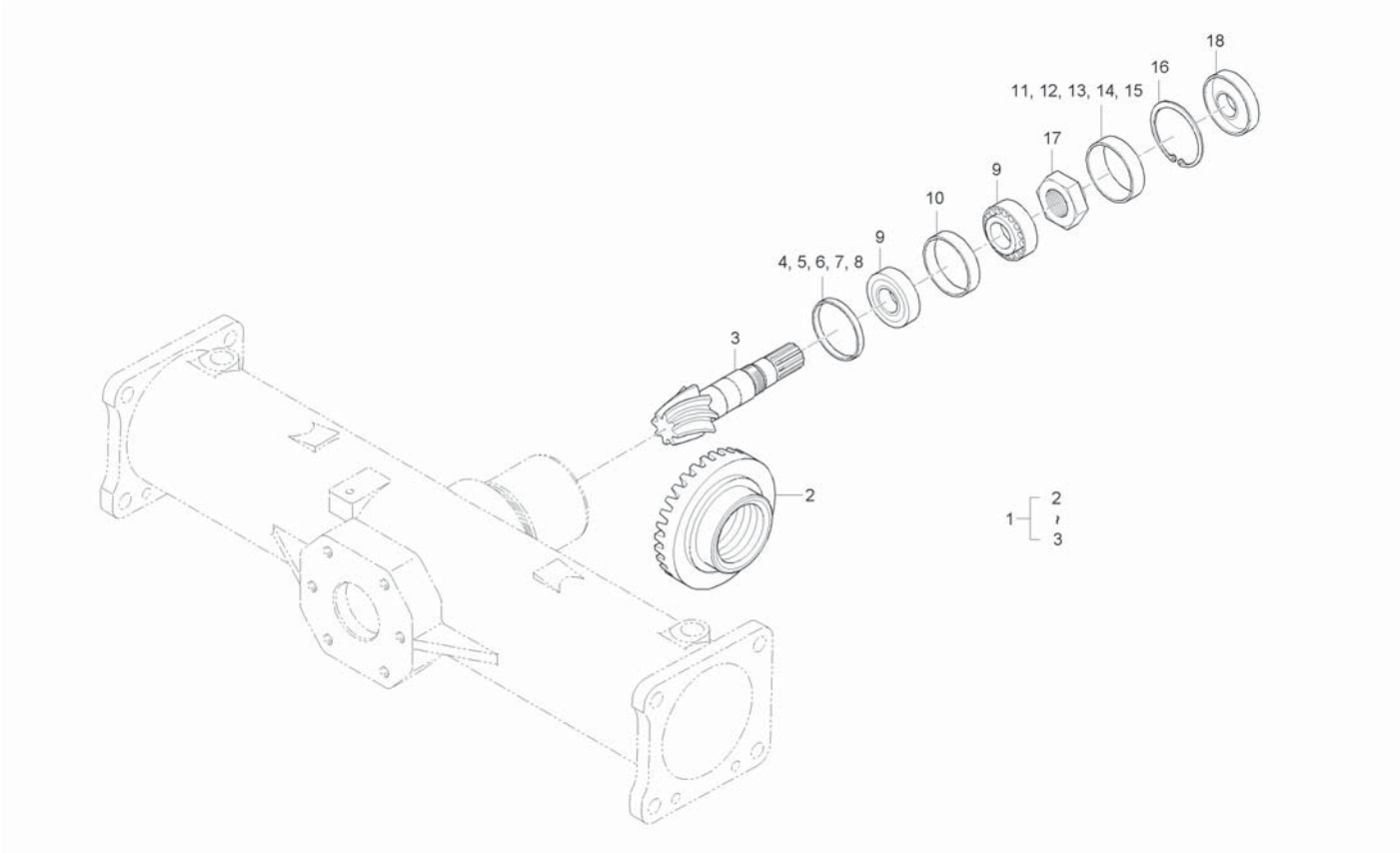

A : CK35-EU , B : CK35H-EU

No.	Part Number	Desciption	Q'TY A	Q'TY B	Q'TY C	Q'TY D	Q'TY E	I.C	Remark
1	T2185-43201	SPIRAL BEVEL GEAR ASSY	1	1					
1	T2185-43202	SPIRAL BEVEL GEAR ASSY	1	1				<--->	
2	T2185-43311	GEAR, SPIRAL BEVEL 21	1	1					
2	T2185-43312	GEAR, SPIRAL BEVEL 21	1	1				<--->	
3	T2185-43211	SHAFT 9, BEVEL PINION	1	1					
3	T2185-43212	SHAFT 9, BEVEL PINION	1	1				<--->	
4	T2185-42451	COLLAR 1, AXLE ADJUSTING FR	1	1					
5	T2185-42461	COLLAR 1, AXLE ADJUSTING FR	1	1					
6	T2185-42471	COLLAR 1, AXLE ADJUSTING FR	1	1					
7	T2185-42481	COLLAR 1, AXLE ADJUSTING FR	1	1					
8	T2185-42491	COLLAR 1, AXLE ADJUSTING FR	1	1					
9	08711-30306	BEARING, TAPER ROLLER	2	2					#30306
10	T2185-42751	SPACER	1	1					
11	T2185-42761	COLLAR 2, AXLE ADJUSTING FR	1	1					
12	T2185-42771	COLLAR 2, AXLE ADJUSTING FR	1	1					
13	T2185-42781	COLLAR 2, AXLE ADJUSTING FR	1	1					
14	T2185-42791	COLLAR 2, AXLE ADJUSTING FR	1	1					
15	T2185-42801	COLLAR 2, AXLE ADJUSTING FR	1	1					
16	04611-00720	SNAP RING	1	1					DIA72

----> Old replace New
<-X-> Not interchangeable
<-O-> Interchangeable with another part(s)
<---- New replace Old
<---> Interchangeable

CK30M-T530A

BEVEL PINION SHAFT GROUP

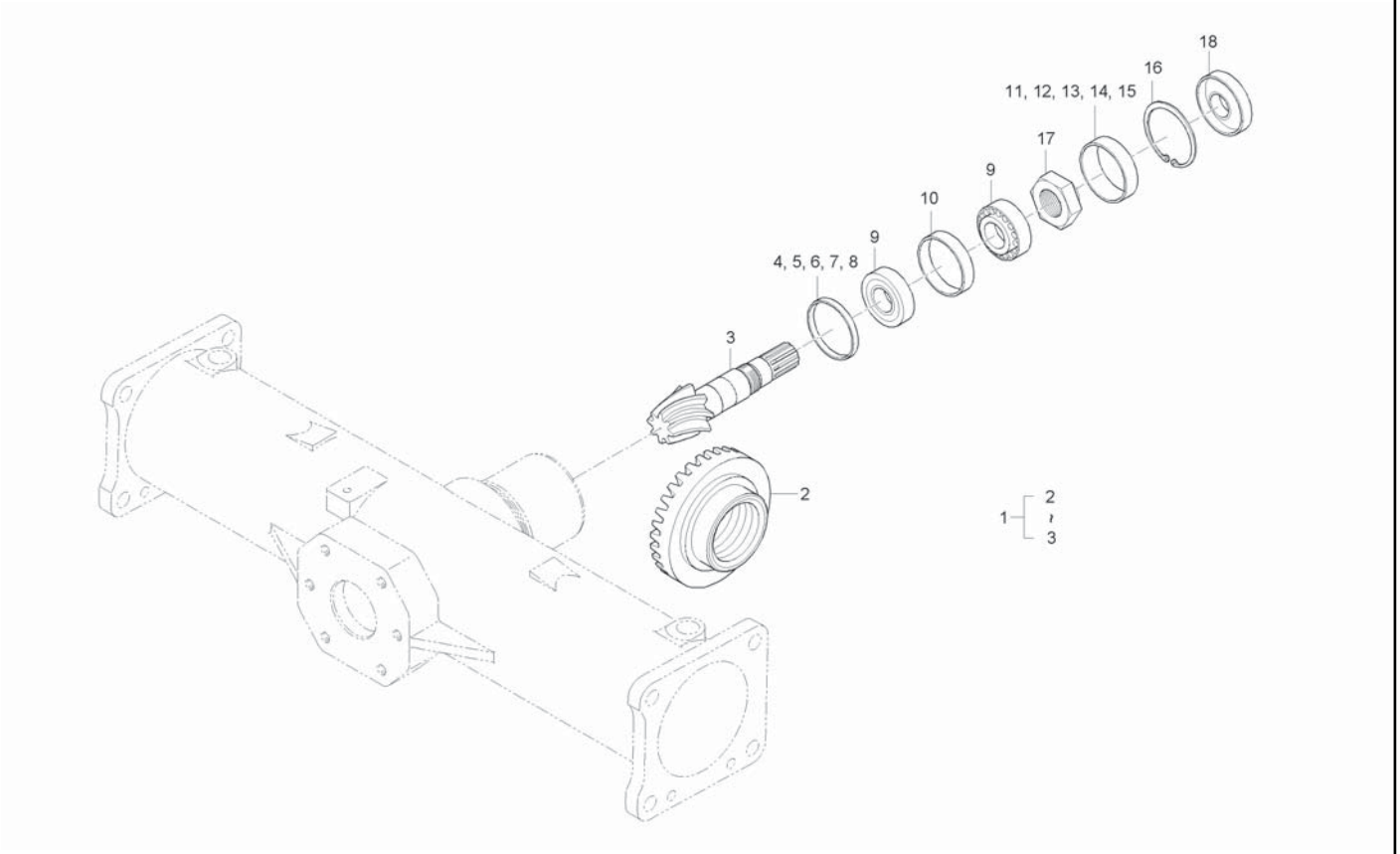

A : CK35-EU , B : CK35H-EU

No.	Part Number	Desciption	Q'TY A	Q'TY B	Q'TY C	Q'TY D	Q'TY E	I.C	Remark
17	T4620-21591	NUT, 28	1	1					
18	T2185-42291	SEAL, OIL	2	2					

----> Old replace New
<-X-> Not interchangeable
<-O-> Interchangeable with another part(s)
<---- New replace Old
<---> Interchangeable

CK30M-T540A

DIFF GEAR SHAFT GROUP

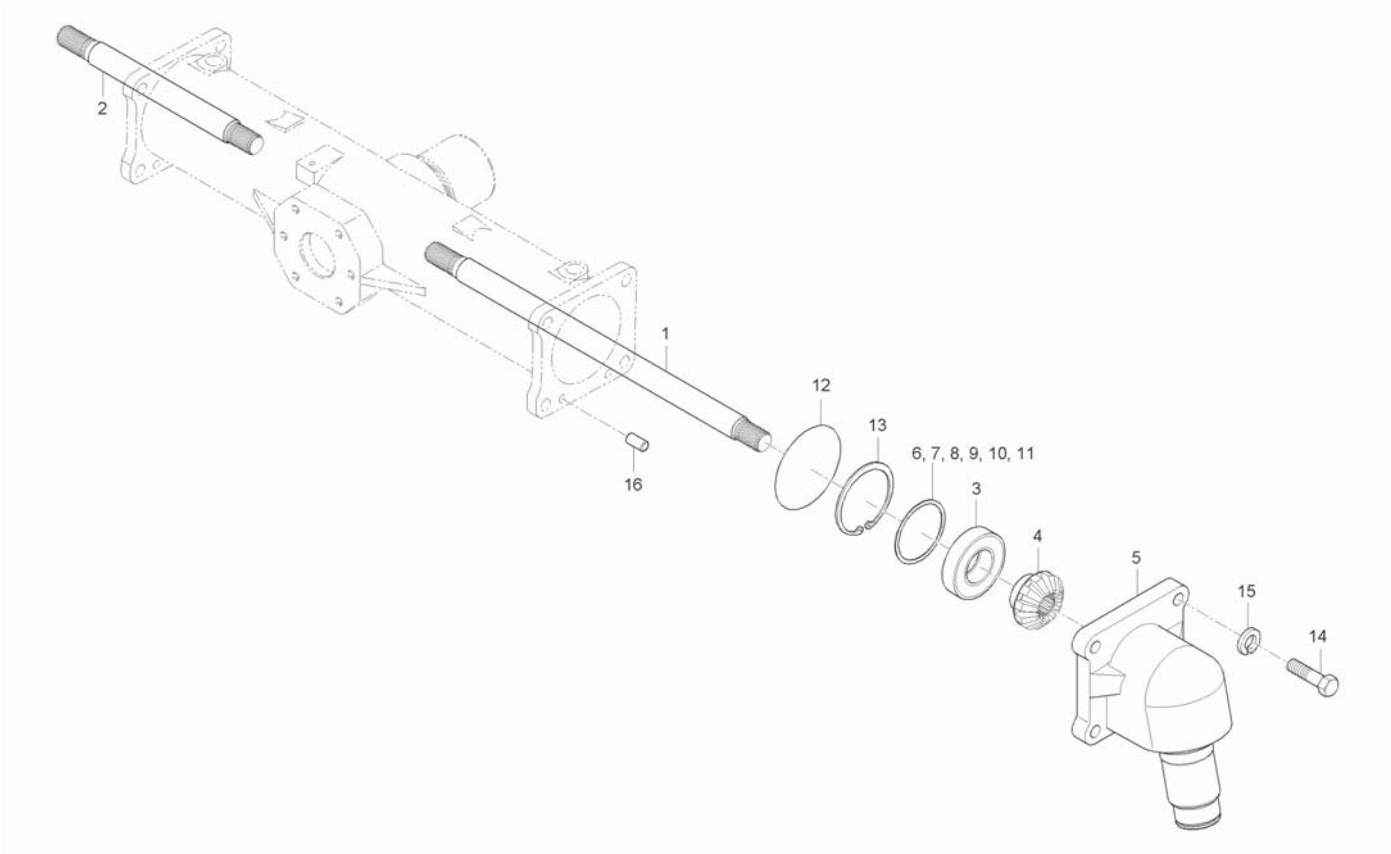

A : CK35-EU , B : CK35H-EU

No.	Part Number	Desciption	Q'TY A	Q'TY B	Q'TY C	Q'TY D	Q'TY E	I.C	Remark
1	T2185-43812	SHAFT, DIFFERENTIAL GEAR LH	1	1					
2	T2185-43822	SHAFT, DIFFERENTIAL GEAR RH	1	1					
3	08101-06207	BALL BEARING	2	2					#6207
4	T2185-43841	BEVEL GEAR, 11	2						
4	T2185-43842	BEVEL GEAR, 11	2	2				<--->	
5	T2185-43442	CASE, BEVEL GEAR	2	2					
6	T4520-42371	SHIM, 0.4	2	2					
7	T2185-43861	SHIM, 0.6	2	2					
8	T2185-43871	SHIM, 0.8	2	2					
9	T2185-43881	SHIM, 1.0	2	2					
10	T2185-43891	SHIM, 1.2	2	2					
11	T2185-43901	SHIM, 1.4	2	2					
12	04811-51050	O RING	2	2					
13	04611-00720	SNAP RING	2	2					DIA72
14	01173-51440	BOLT	8	8					M14P1.5*40
15	04512-50140	WASHER, SPRING	8	8					
16	05012-01020	PIN, PARALLEL	4	4					

----> Old replace New
<-X-> Not interchangeable
<-O-> Interchangeable with another part(s)
<---- New replace Old
<---> Interchangeable

CK30M-T550A

FRONT AXLE CASE GROUP

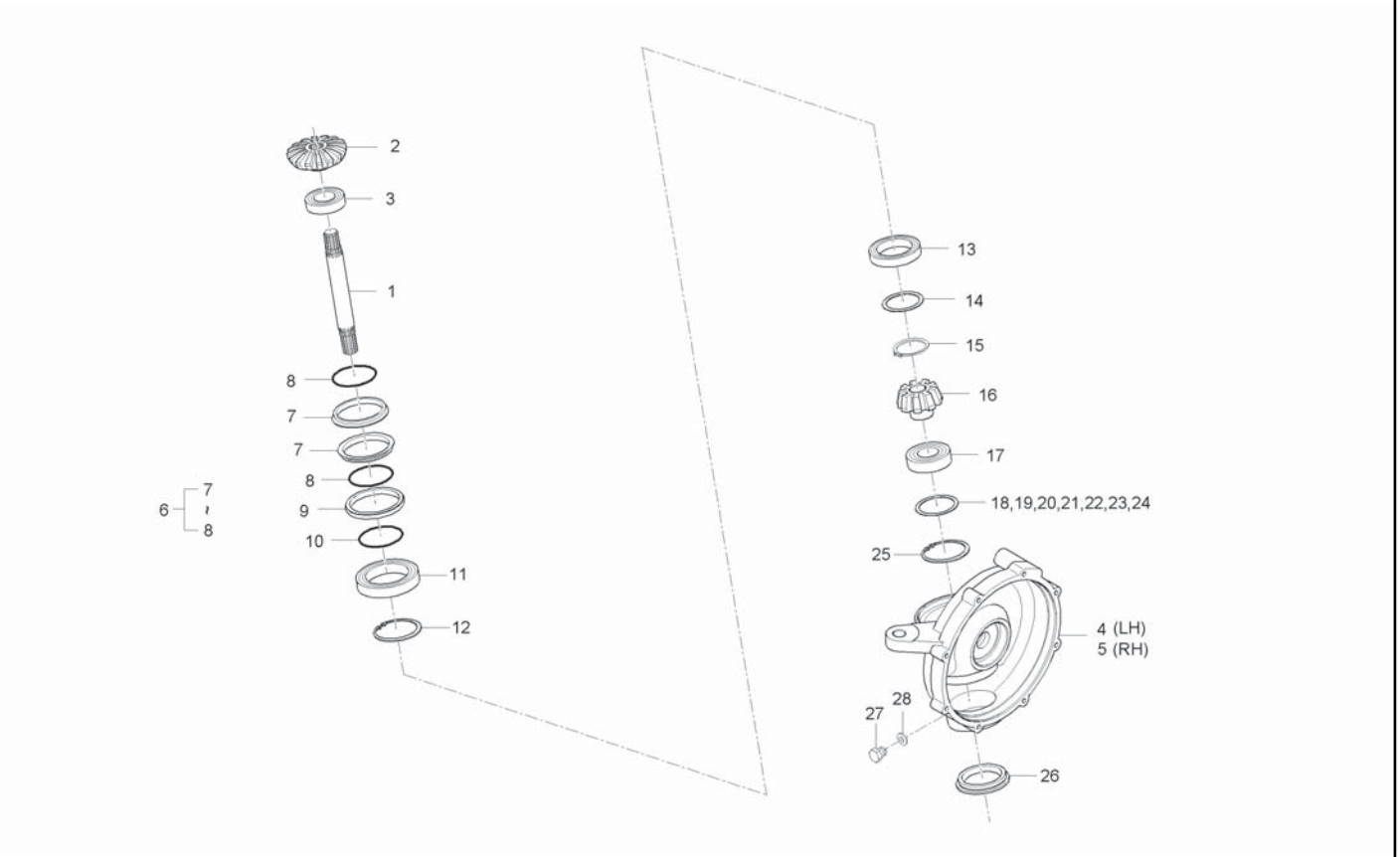

A : CK35-EU , B : CK35H-EU

No.	Part Number	Desciption	Q'TY A	Q'TY B	Q'TY C	Q'TY D	Q'TY E	I.C	Remark
1	T2185-43462	SHAFT, BEVEL GEAR	2	2					
2	T2185-43831	BEVEL GEAR, 16	2						
2	T2185-43832	BEVEL GEAR, 16	2	2				<--->	
3	T2185-43851	BALL BEARING	2	2					
4	T2185-43632	CASE, FRONT AXLE LH	1	1					
5	T2185-43642	CASE, FRONT AXLE RH	1	1					
6	T4520-43652	FLOATING SEAL ASSY	2	2					
7	T4520-43662	RING, SEAL	2	2					
8	T4520-43672	O RING	2	2					
9	T2185-43471	HOUSING	2	2					
10	04811-11100	O RING	2	2					
11	08101-06012	BALL BEARING	2	2					
12	04611-00800	SNAP RING	2	2					
13	08101-06010	BALL BEARING	2	2					#6010
14	T2185-43691	COLLAR, FR AXLE SHAFT	2	2					
15	04612-00500	SNAP RING	2	2					
16	T2185-43651	BEVEL GEAR, 11	2						
16	T2185-43652	BEVEL GEAR, 11	2	2				<--->	
17	08101-06207	BALL BEARING	2	2					#6207

----> Old replace New
<-X-> Not interchangeable
<-O-> Interchangeable with another part(s)
<---- New replace Old
<---> Interchangeable

CK30M-T550A

FRONT AXLE CASE GROUP

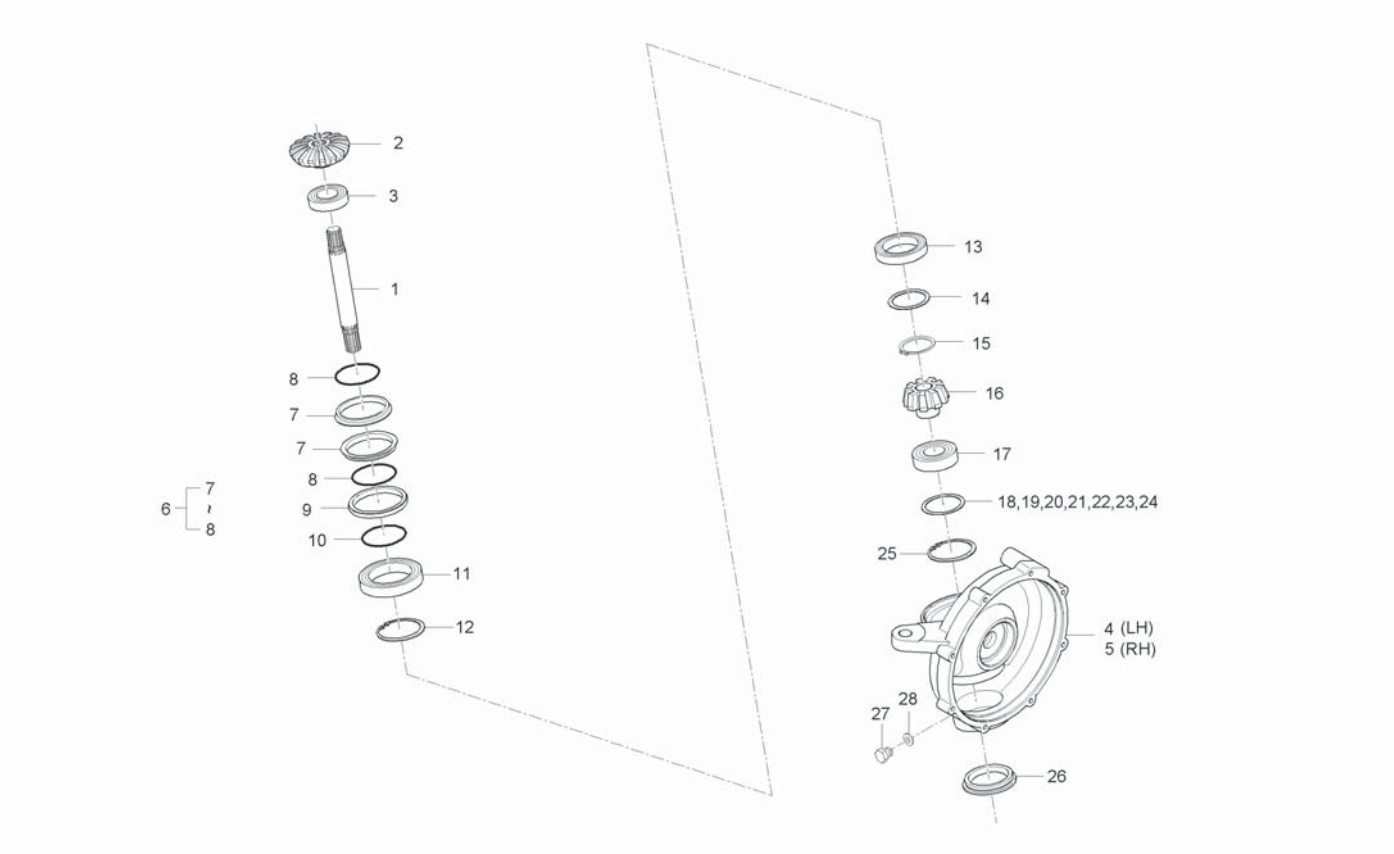

A : CK35-EU , B : CK35H-EU

No.	Part Number	Desciption	Q'TY A	Q'TY B	Q'TY C	Q'TY D	Q'TY E	I.C	Remark
18	T2185-43881	SHIM, 1.0	2	2					
19	T2185-43891	SHIM, 1.2	2	2					
20	T2185-43901	SHIM, 1.4	2	2					
21	T2185-42361	SHIM, 1.6	2	2					
22	T2185-42371	SHIM, 1.8	2	2					
23	T2185-42381	SHIM, 2.0	2	2					
24	T2185-42391	SHIM, 2.2	2	2					
25	04611-00720	SNAP RING	2	2					DIA72
26	T2185-43541	PLUG	2	2					
27	06331-35010	PLUG	2	2					M6*P1.0
28	04717-01000	WASHER, SEAL	2	2					M10

----> Old replace New
<-X-> Not interchangeable
<-O-> Interchangeable with another part(s)
<---- New replace Old
<---> Interchangeable

CK30M-T560A

FRONT AXLE GROUP

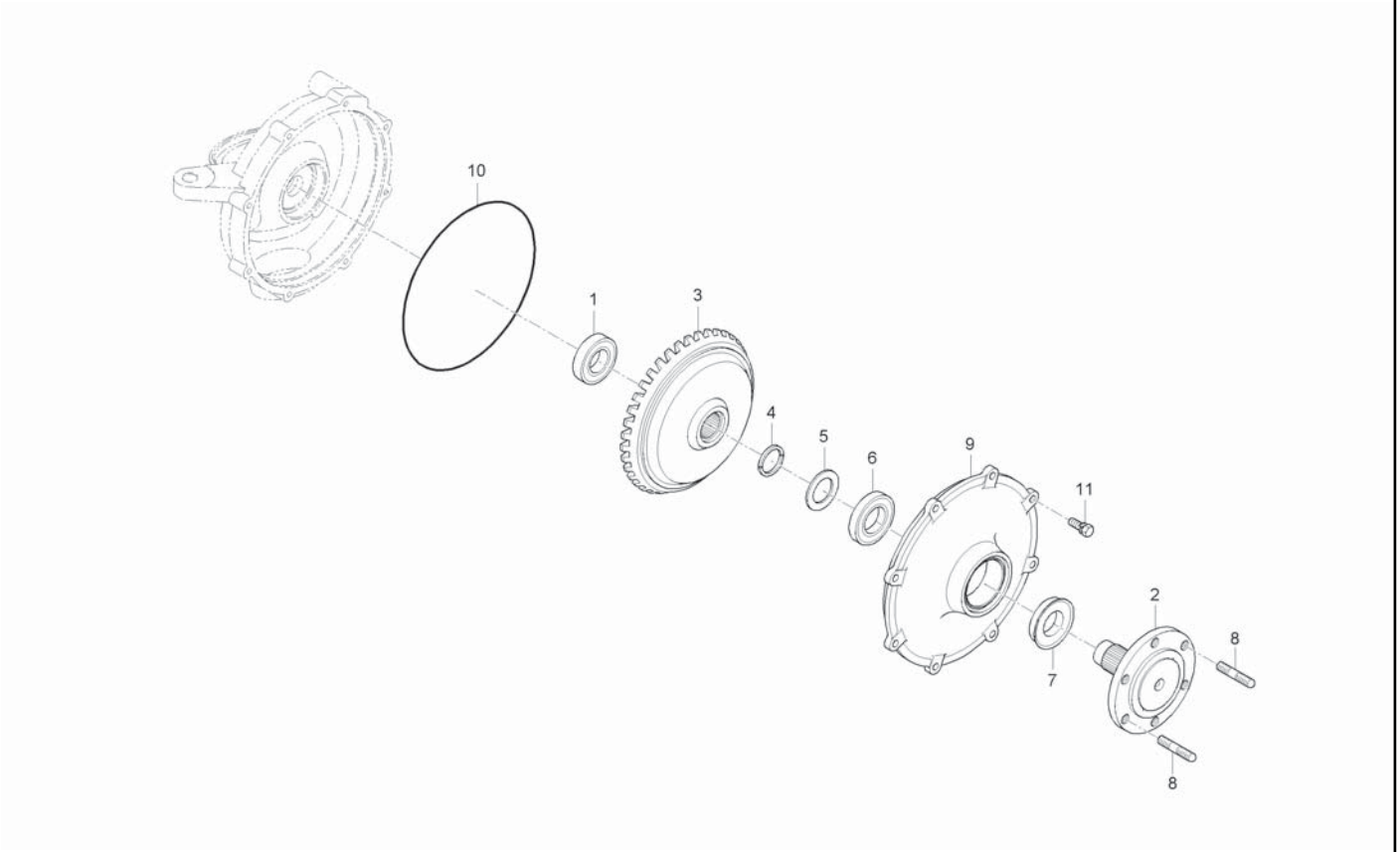

A : CK35-EU , B : CK35H-EU

No.	Part Number	Desciption	Q'TY A	Q'TY B	Q'TY C	Q'TY D	Q'TY E	I.C	Remark
1	08101-06306	BALL BEARING	2	2					#6306
2	T2440-43611	FRONT AXLE	2	2					
3	T2185-43661	BEVEL GEAR, 42	2	2					
4	37650-4368-0	PIN, SEMILUNAR SNAP	4	4					
5	T2185-43681	SPACER	2	2					
6	08101-06207	BALL BEARING	2	2					#6207
7	T2440-43492	SEAL, OIL	2	2					
8	01574-51225	STUD	4	4					
9	T2185-43621	COVER, FRONT AXLE	2	2					
10	T2185-43671	O RING	2	2					
11	01123-50825	BOLT, WASHER	16	16					M8*P1.25

----> Old replace New
<-X-> Not interchangeable
<-O-> Interchangeable with another part(s)

<---- New replace Old
<---> Interchangeable

CK30M-T585B

STEERING CYLINDER GROUP

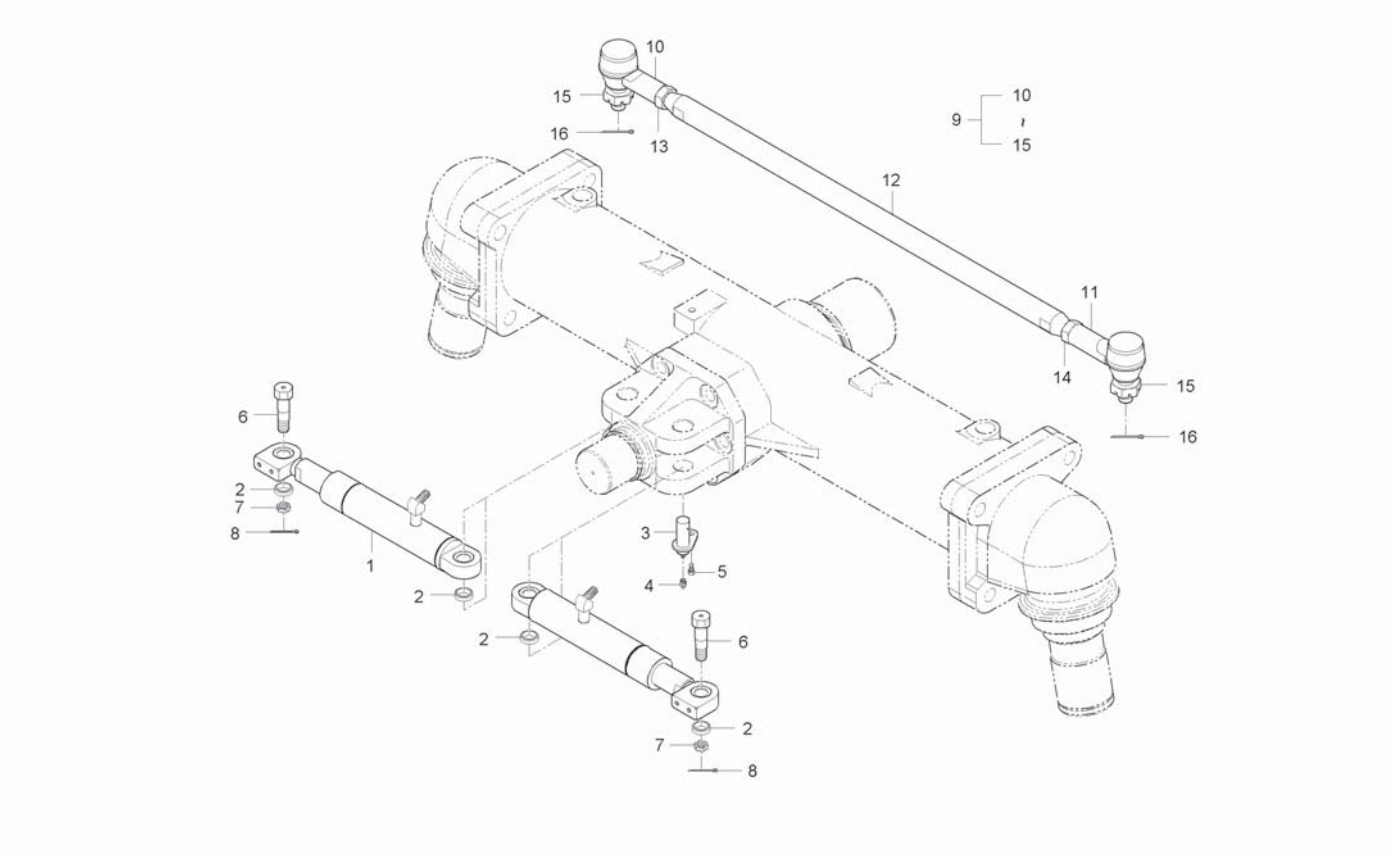

A : CK35-EU , B : CK35H-EU

No.	Part Number	Desciption	Q'TY A	Q'TY B	Q'TY C	Q'TY D	Q'TY E	I.C	Remark
1	T2185-32301	ASSY,STEERING CYLINDER(R)	1	1					
2	T4625-31151	SPACER	4	4					
3	T4625-31361	PIN,CYLINDER SUPPORT	2	2					
4	06613-10010	NIPPLE, GREASE	1	1					A-M6F
5	01123-50816	BOLT, WASHER	2	2					M8*P1.25
6	T2620-31183	PIN, SUPPORT	2	2					
7	T2610-31311	NUT, SLOTIED	2	2					
8	05511-50335	PIN, SPLIT	2	2					DIA3*35
9	T2185-31132	TIE ROD ASSY	1	1					
10	T2240-12602	TIE ROD END ASSY, RH	1	1					
11	T2240-12702	TIE ROD END ASSY, LH	1	1					
12	T2185-31142	ROD, TIE	1	1					
13	02174-50160	NUT	1	1					
14	37650-1128-1	NUT	1	1					
15	34150-1283-1	NUT, SLOTIED	1	1					
16	05511-50325	PIN, SPLIT	2	2					

----> Old replace New
<-X-> Not interchangeable
<-O-> Interchangeable with another part(s)
<---- New replace Old
<---> Interchangeable

CK30H-T610A

PROPER SHAFT GROUP

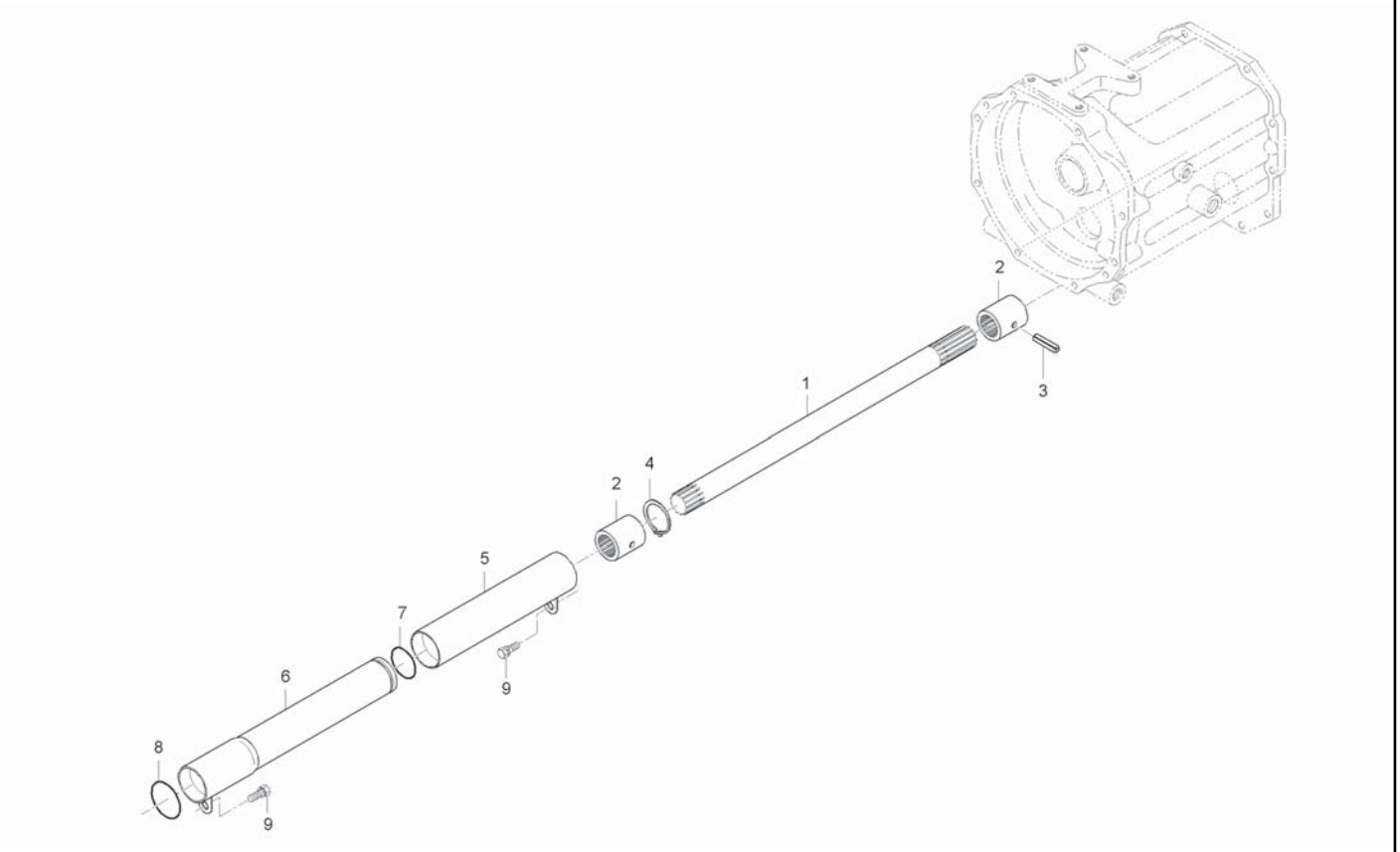

A : CK35-EU , B : CK35H-EU

No.	Part Number	Desciption	Q'TY A	Q'TY B	Q'TY C	Q'TY D	Q'TY E	I.C	Remark
1	T2195-44581	SHAFT, PROPELLER		1					
2	T4620-44592	COUPLING		2					
3	05411-00635	PIN, SPRING		1					DIA5*36
4	04612-00250	SNAP RING		1					
5	T2195-44591	COVER 1, PROPELLER SHAFT		1					
6	T2350-44621	COVER 1, PROPELLER SHAFT		1					
7	04811-00420	O RING		1					
8	04811-06350	O RING		1					
9	01123-50816	BOLT, WASHER		2					M8*P1.25

----> Old replace New
<-X-> Not interchangeable
<-O-> Interchangeable with another part(s)
<---- New replace Old
<---> Interchangeable

CK30M-T610A

PROPER SHAFT GROUP

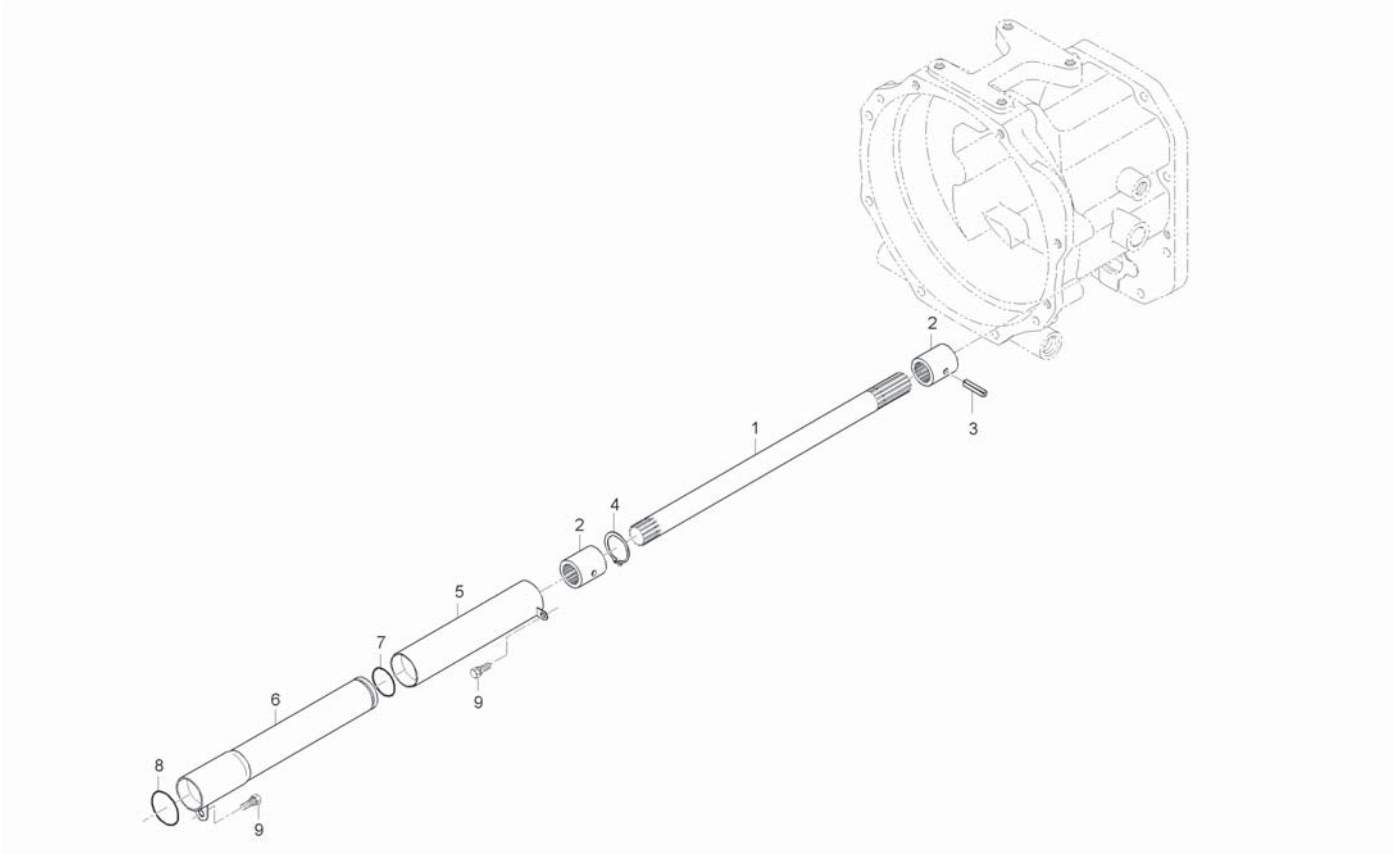

A : CK35-EU , B : CK35H-EU

No.	Part Number	Desciption	Q'TY A	Q'TY B	Q'TY C	Q'TY D	Q'TY E	I.C	Remark
1	T2185-44581	SHAFT, PROPELLER	1						
2	T4620-44592	COUPLING	2						
3	05411-00635	PIN, SPRING	1						
4	04612-00250	SNAP RING	1						
5	T2350-44611	COVER 1, PROPELLER SHAFT	1						
6	T2350-44621	COVER 1, PROPELLER SHAFT	1						
7	04811-00420	O RING	1						
8	04811-06350	O RING	1						
9	01123-50816	BOLT, WASHER	2						

----> Old replace New
<-X-> Not interchangeable
<-O-> Interchangeable with another part(s)

<---- New replace Old
<---> Interchangeable

CK30H-T100A

CLUTCH GROUP

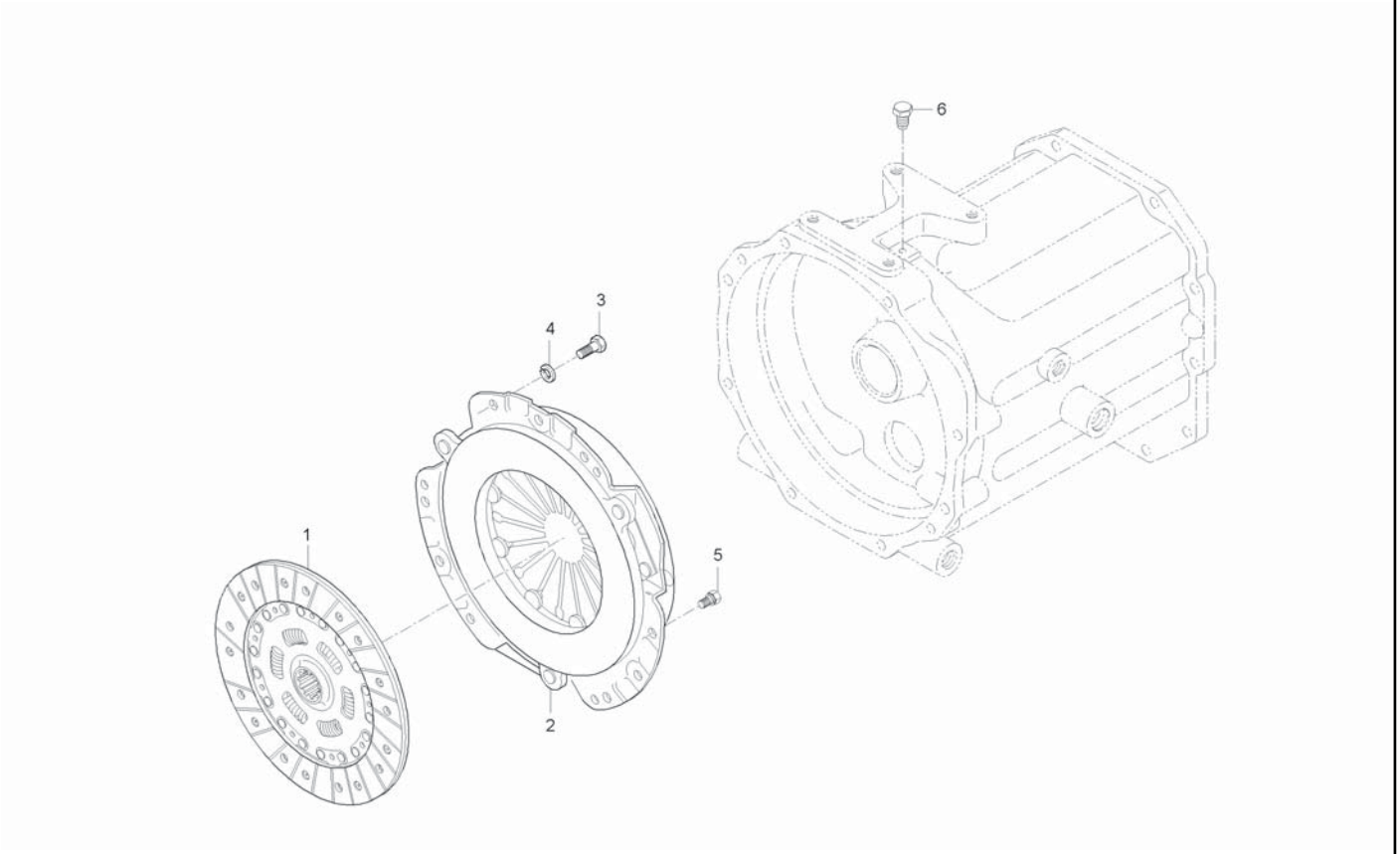

A : CK35-EU , B : CK35H-EU

No.	Part Number	Desciption	Q'TY A	Q'TY B	Q'TY C	Q'TY D	Q'TY E	I.C	Remark
1	T2195-14451	CLUTCH DISK ASSY		1					
2	37300-1450-1	CLUTCH PRESSURE PLATE ASSY		1					
3	34220-1451-2	REAMER BOLT		2					
4	04512-50080	SPRING WASHER		2					M08
5	01123-50816	BOLT, WASHER		4					M8*P1.25
6	T2305-43883	PLUG		1					

----> Old replace New
<-X-> Not interchangeable
<-O-> Interchangeable with another part(s)
<---- New replace Old
<---> Interchangeable

CK30M-T100A

CLUTCH GROUP

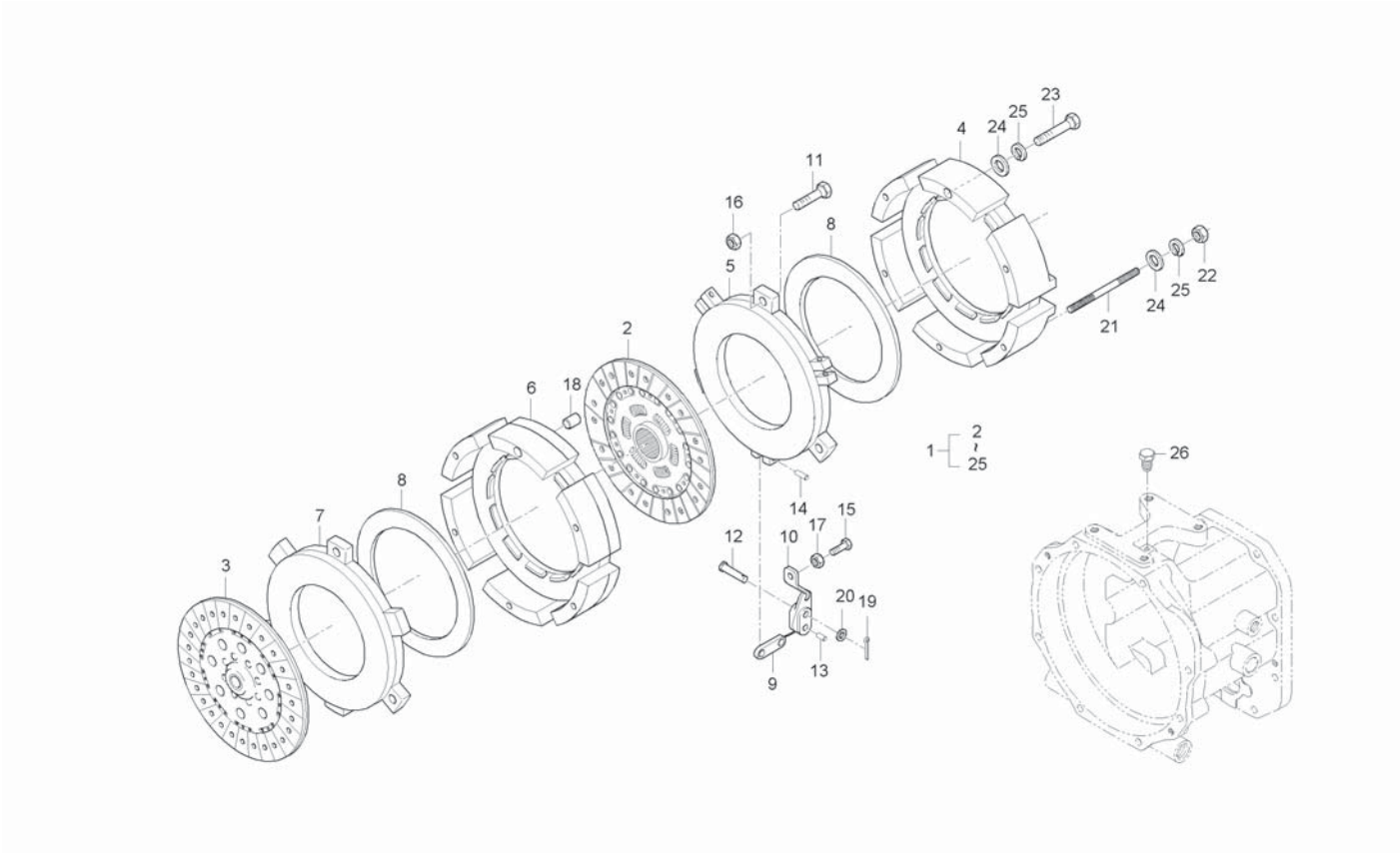

A : CK35-EU , B : CK35H-EU

No.	Part Number	Desciption	Q'TY A	Q'TY B	Q'TY C	Q'TY D	Q'TY E	I.C	Remark
1	T2185-14352	DUAL CLUTCH ASSY, 2	1						
2	T2185-14362	TRAVELING DISK ASSY	1						
3	T2565-14371	CLUTCH DISK ASSY, PTO	1						
4	T2565-14411	COVER, 1	1						
5	T2565-14431	PLATE 1, PRESSURE	1						
6	T2565-14421	COVER 2	1						
7	T2565-14441	PLATE 2, PRESSURE	1						
8	T2185-14521	SPRING, DIAPHRAGM	2						
9	T2440-14552	RELEASE ROD ASSY	3						
10	T2440-14542	RELEASE LEVER ASSY	3						
11	T2440-14581	BOLT	3						
12	T2440-14561	PIN, CONNECTING	3						
13	T2440-14571	PIN, PARALLEL	3						
14	T2440-14591	PIN, PARALLEL	3						
15	T2440-14621	BOLT, ADJUSTING	3						
16	02176-50100	NUT	3						
17	T2440-14531	NUT, FIXING	3						
18	T2440-14671	TUBE, FIXING	3						
19	T2440-14641	PIN, SPLIT	3						

----> Old replace New
<-X-> Not interchangeable
<-O-> Interchangeable with another part(s)
<---- New replace Old
<---> Interchangeable

CK30M-T100A

CLUTCH GROUP

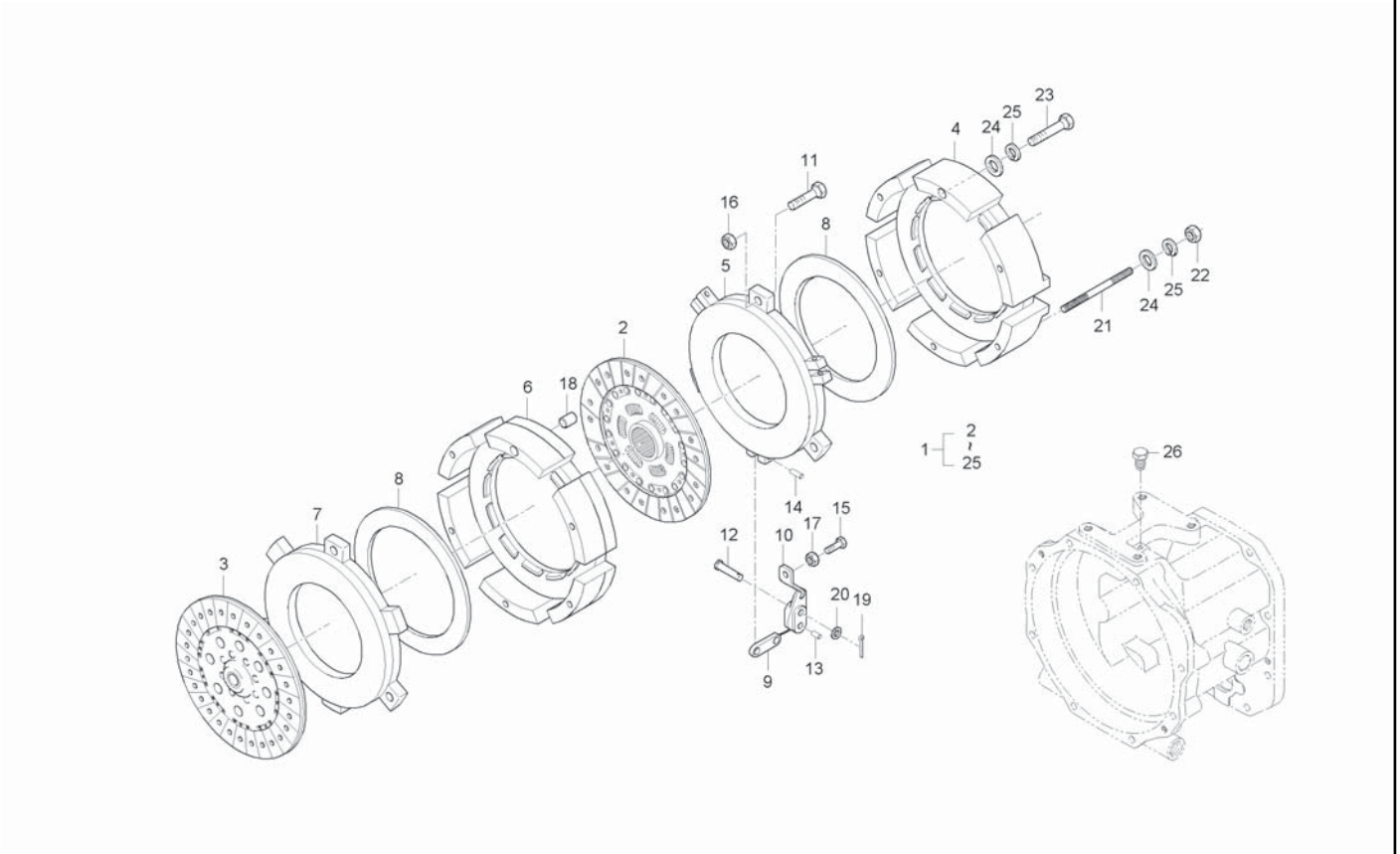

A : CK35-EU , B : CK35H-EU

No.	Part Number	Desciption	Q'TY A	B	C	D	E	I.C	Remark
20	04012-50080	WASHER, PLAIN	3						
21	01513-50880	STUD	2						
22	02156-50080	NUT	2						
23	01153-50880	BOLT	4						
23	01123-50880	BOLT, WASHER	4					<----	
24	04013-50080	WASHER	6						
25	04512-50080	SPRING WASHER	2						
26	T2305-43883	PLUG	1						

----> Old replace New
<-X-> Not interchangeable
<-O-> Interchangeable with another part(s)
<---- New replace Old
<---> Interchangeable

CK30H-T110A

CLUTCH LEVER GROUP

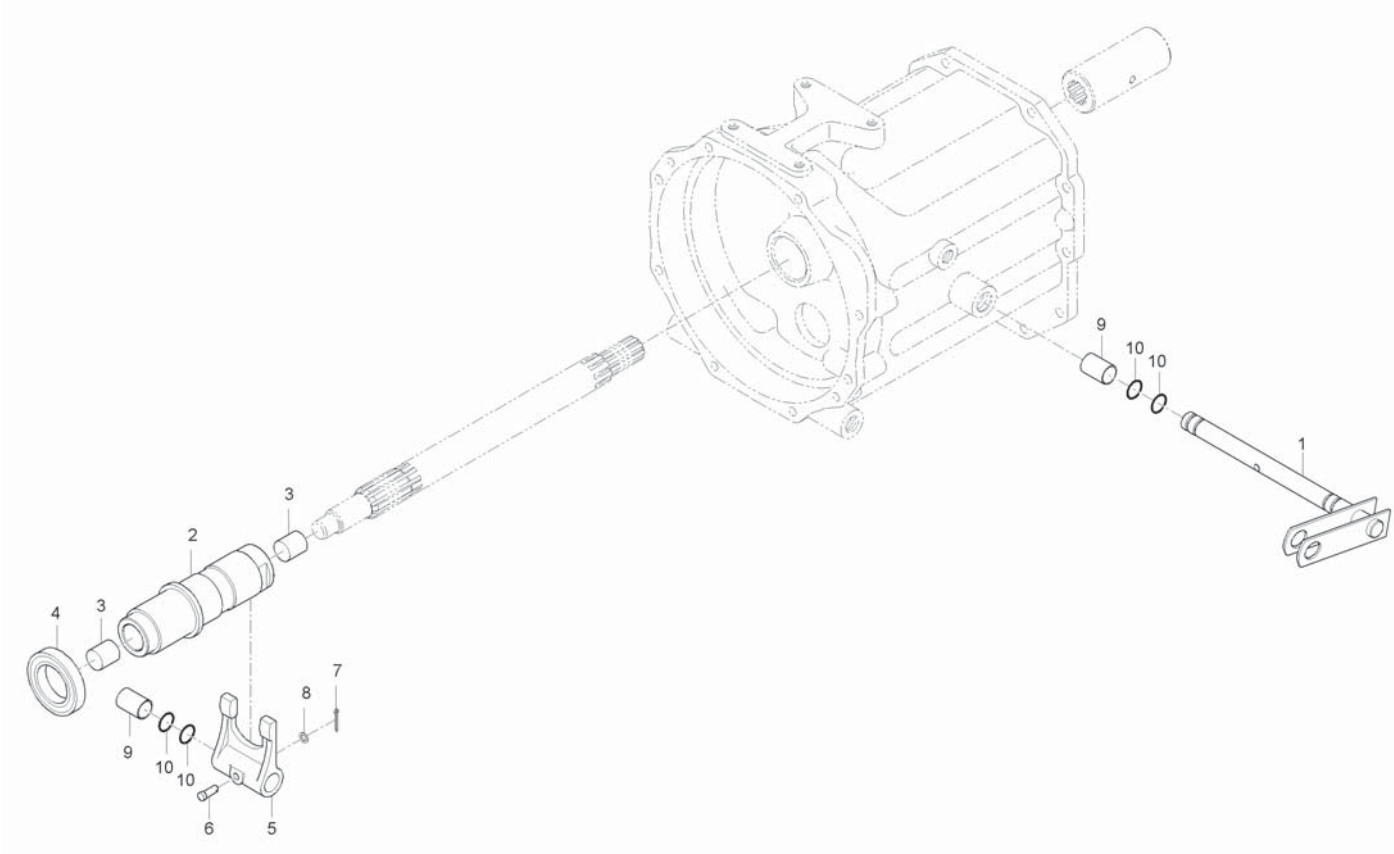

A : CK35-EU , B : CK35H-EU

No.	Part Number	Desciption	Q'TY A	Q'TY B	Q'TY C	Q'TY D	Q'TY E	I.C	Remark
1	T2185-14714	LEVER, CLUTCH		1					
2	T2195-14813	HUB, RELEASE BEARING		1					
3	08511-02520	BUSH		2					MB2520DU
4	08490-00001	BEARING, THRUST BALL		1					KOYO,RCT45-1S
5	T2195-14721	FORK, CLUTCH RELEASE		1					
6	05112-50840	JOINT PIN		1					
7	05511-50220	PIN, SPLIT		1					2*20
8	04012-50080	WASHER, PLAIN		1					DIA18*T1.2
9	08511-02030	BUSH		2					
10	04811-00160	O RING		4					DIA15.8

----> Old replace New
<-X-> Not interchangeable
<-O-> Interchangeable with another part(s)
<---- New replace Old
<---> Interchangeable

CK30M-T110A

CLUTCH LEVER GROUP

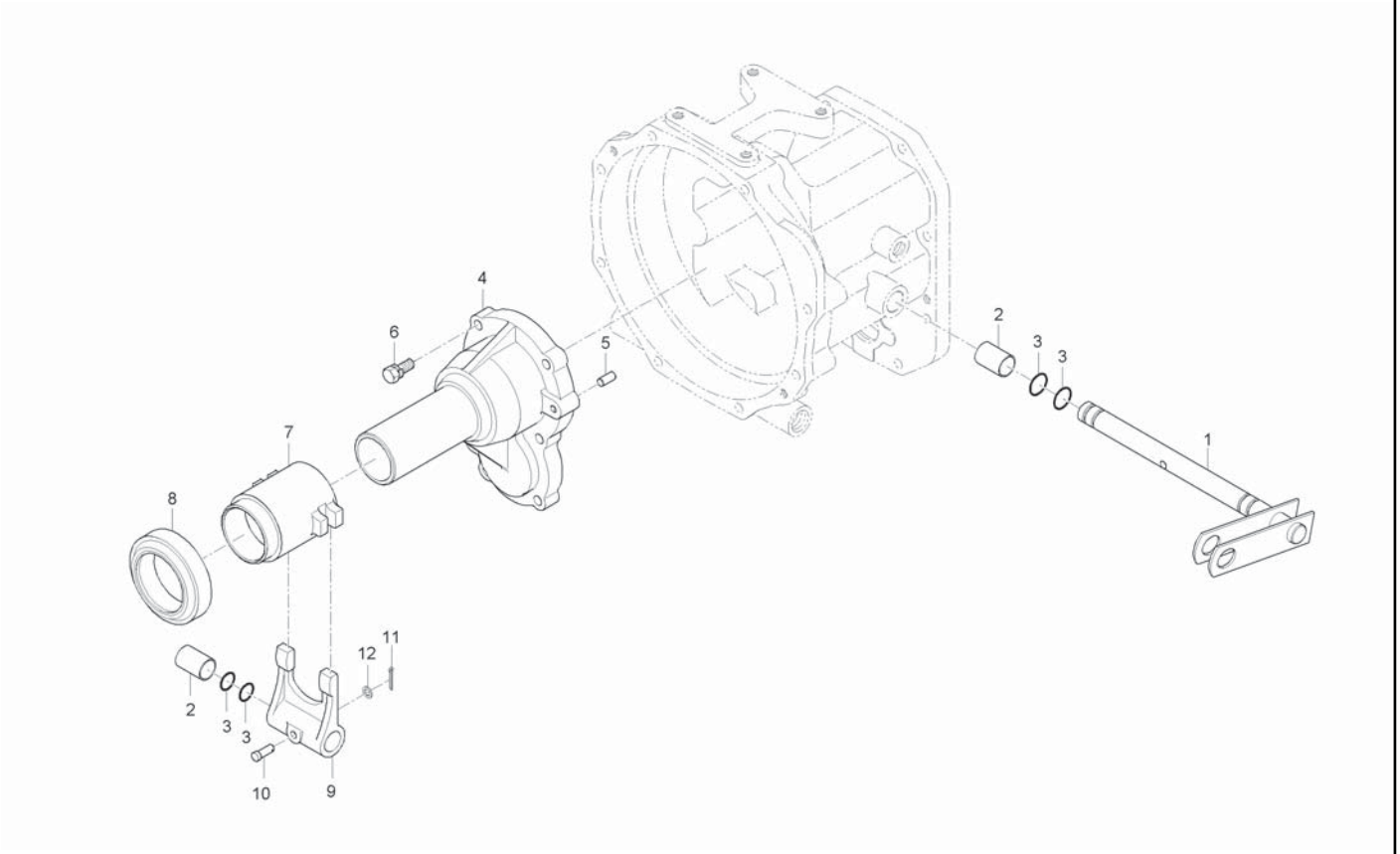

A : CK35-EU , B : CK35H-EU

No.	Part Number	Desciption	Q'TY A	Q'TY B	Q'TY C	Q'TY D	Q'TY E	I.C	Remark
1	T2185-14713	LEVER, CLUTCH	1						
1	T2185-14714	LEVER, CLUTCH	1					<--->	
2	08511-02030	BUSH	2						
3	04811-00160	O RING	4						
4	T2185-14752	CASE, PROPELLAR SHAFT	1						
4	T2185-14753	CASE, PROPELLAR SHAFT	1					<----	
5	05012-00818	PIN, PARALLEL	2						
6	01123-50825	BOLT, WASHER	6						
7	T2185-14811	HUB, RELEASE BEARING	1						
8	T2440-14971	BEARING, THRUST BALL	1						
9	T2185-14723	FORK, CLUTCH RELEASE	1						
10	05112-50840	JOINT PIN	1						
11	05511-50220	PIN, SPLIT	1						
12	04012-50080	WASHER, PLAIN	1						

----> Old replace New
<-X-> Not interchangeable
<-O-> Interchangeable with another part(s)
<---- New replace Old
<---> Interchangeable

CK30H-T130A

CLUTCH HOUSING 1 GROUP

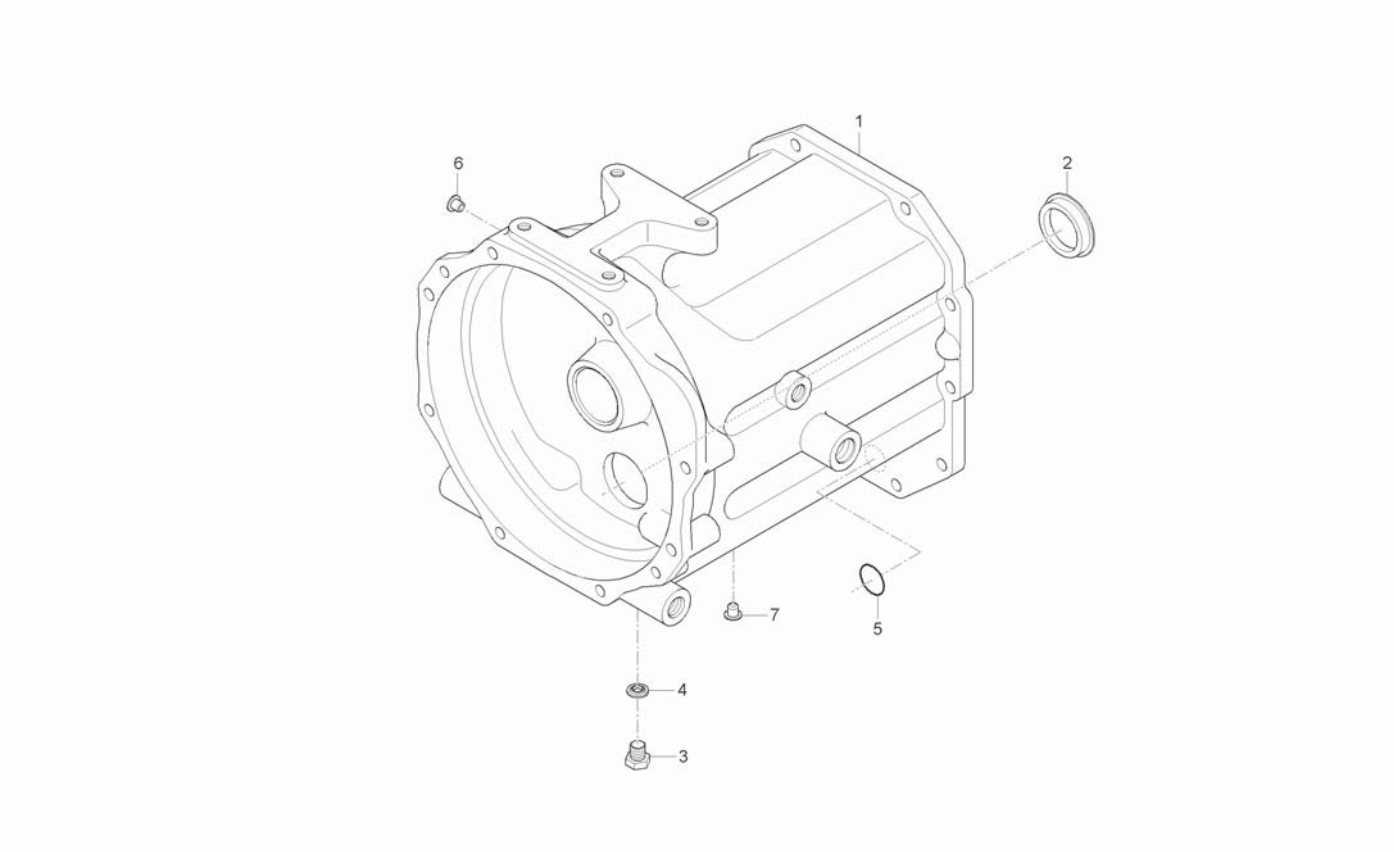

A : CK35-EU , B : CK35H-EU

No.	Part Number	Desciption	Q'TY A	Q'TY B	Q'TY C	Q'TY D	Q'TY E	I.C	Remark
1	T2195-14114	HOSHING, CLUTCH		1					
1	T2195-14115	HOSHING, CLUTCH		1				<--->	
1	T2195-14116	HOSHING, CLUTCH		1				<----	
2	T2305-51191	CAP		1					
3	06331-35010	PLUG		1					M6*P1.0
4	04717-01000	WASHER, SEAL		1					M10
5	04811-06420	O RING		1					
6	32210-2758-1	PLUG		1					
7	31220-1429-3	PLUG		4					

----> Old replace New
<-X-> Not interchangeable
<-O-> Interchangeable with another part(s)
<---- New replace Old
<---> Interchangeable

CK30M-T130A

CLUTCH HOUSING 1 GROUP

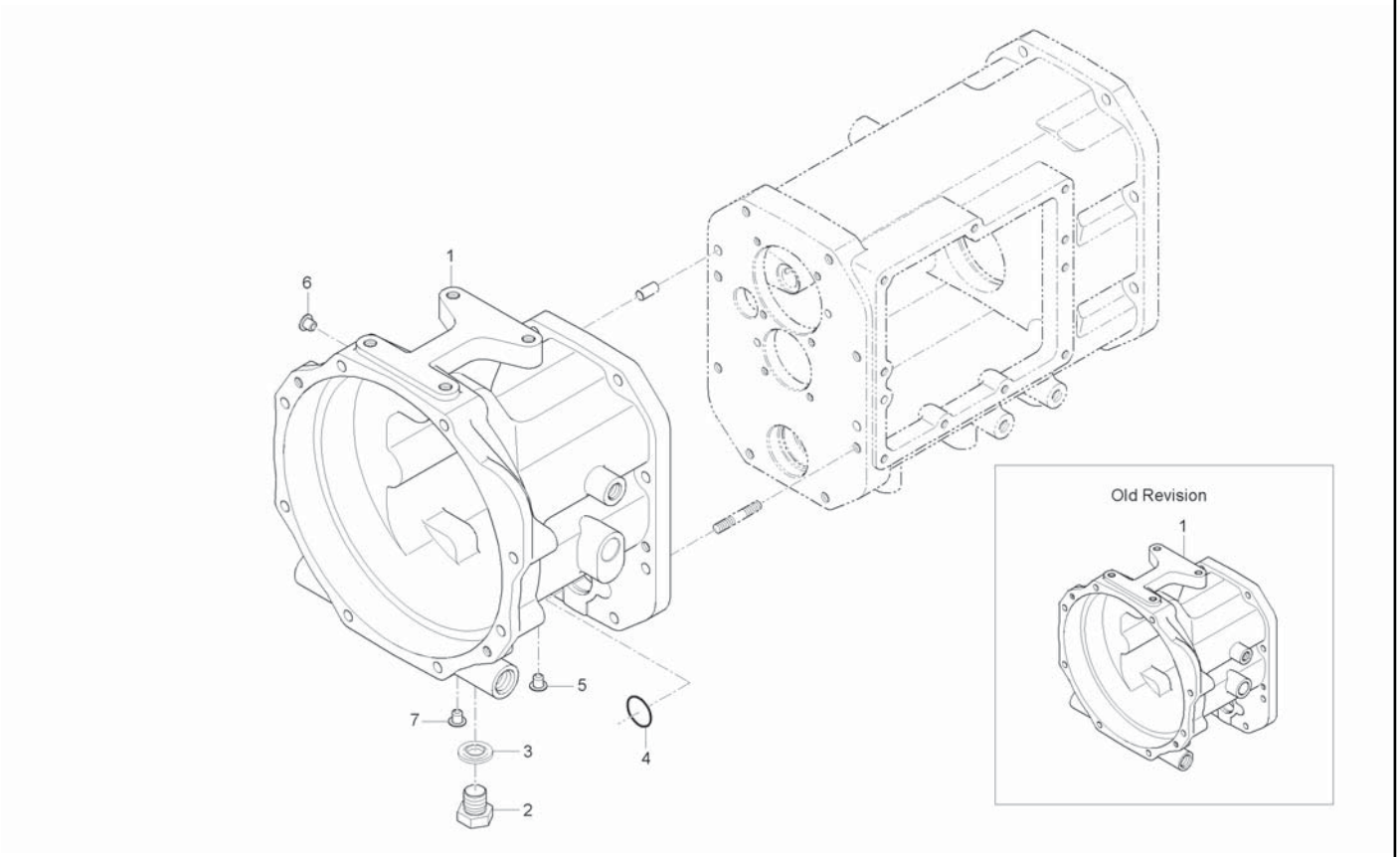

A : CK35-EU , B : CK35H-EU

No.	Part Number	Desciption	Q'TY A	Q'TY B	Q'TY C	Q'TY D	Q'TY E	I.C	Remark
1	T2185-14116	HOSHING, CLUTCH	1						
1	T2185-14117	HOSHING, CLUTCH	1					<----	
2	06331-35010	PLUG	1						
3	04717-01000	WASHER, SEAL	1						
4	04811-06420	O RING	1						
5	34150-2758-1	PLUG	2						
6	32210-2758-1	PLUG	1						
7	31220-1429-3	PLUG	4						

----> Old replace New
<-X-> Not interchangeable
<-O-> Interchangeable with another part(s)
<---- New replace Old
<---> Interchangeable

CK30M-T140A

CLUTCH HOUSING 2 GROUP

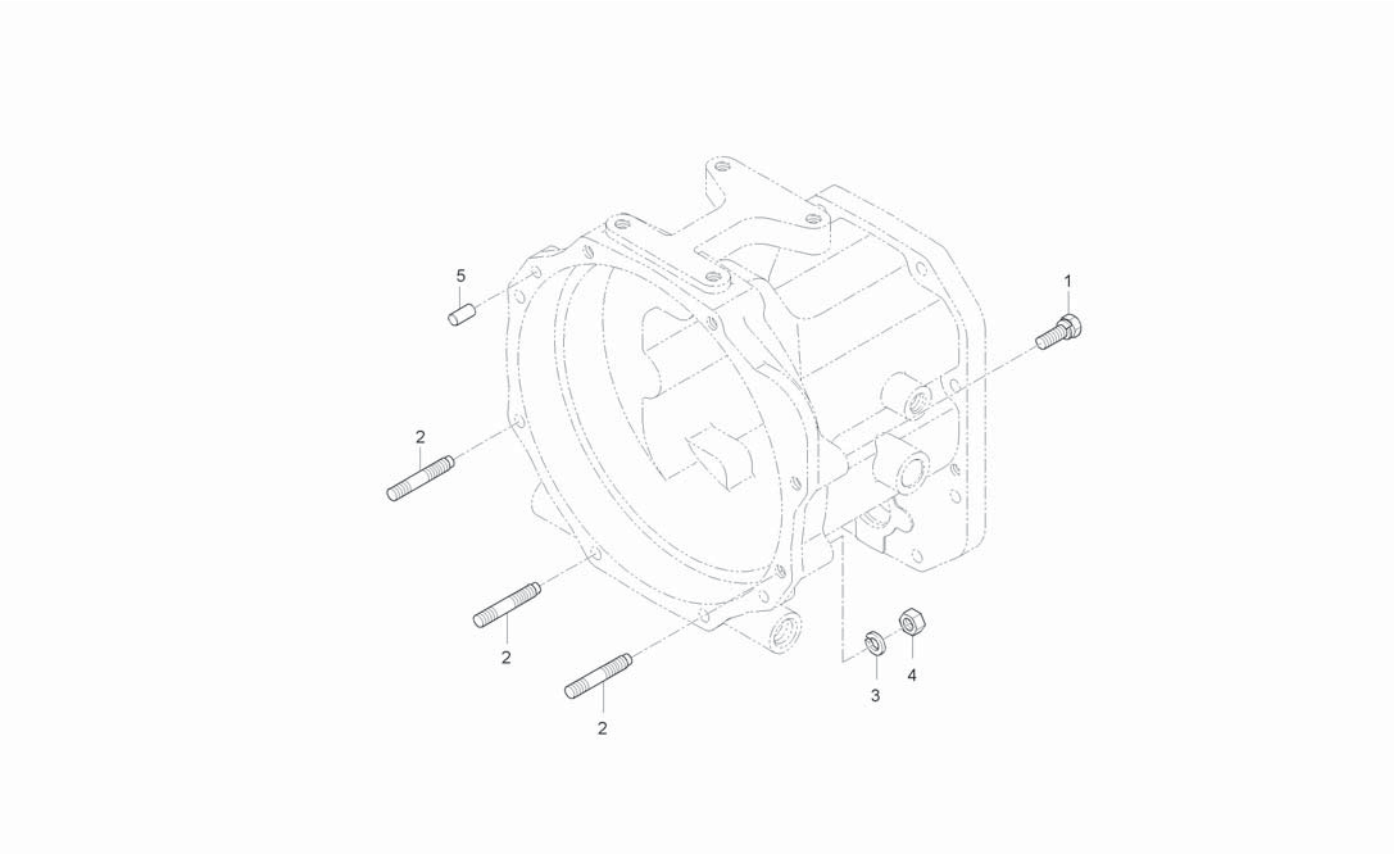

A : CK35-EU , B : CK35H-EU

No.	Part Number	Desciption	Q'TY A	Q'TY B	Q'TY C	Q'TY D	Q'TY E	I.C	Remark
1	01133-51065	BOLT, WASHER	4	4					
1	01177-51065	BOLT	4	4				<----	M10XP1.25(9T /스프링
2	01517-51060	STUD	4	4					M10*1.25*60
3	04512-50100	WASHER, SPRING	4	4					M10
4	02176-50100	NUT	4	4					M10X1.25
5	05012-01025	PIN, PARALLEL	2	2					

----> Old replace New
<-X-> Not interchangeable
<-O-> Interchangeable with another part(s)
<---- New replace Old
<---> Interchangeable

CK30H-T150A

HST CASE GROUP

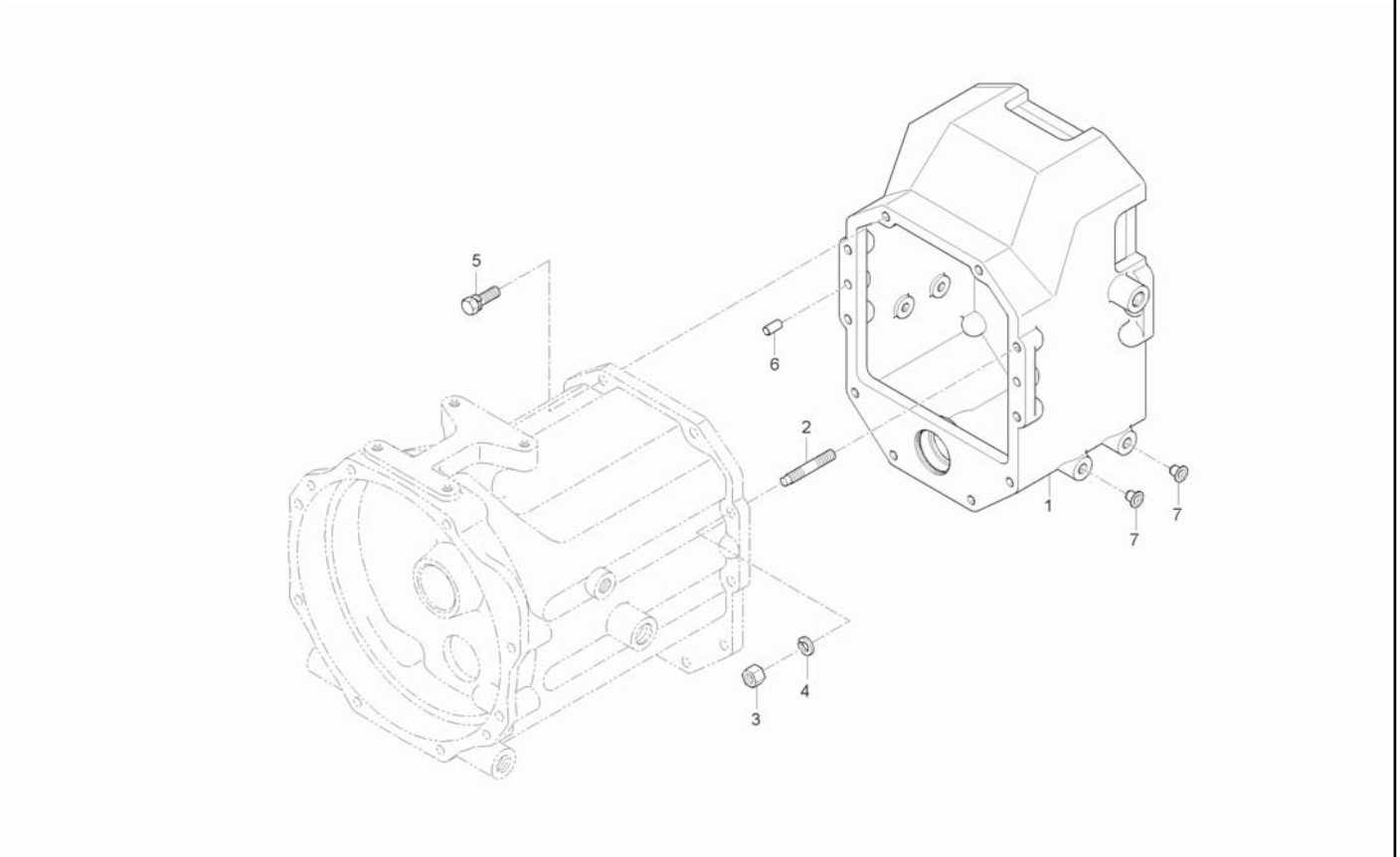

A : CK35-EU , B : CK35H-EU

No.	Part Number	Desciption	Q'TY A	Q'TY B	Q'TY C	Q'TY D	Q'TY E	I.C	Remark
1	T2195-21141	CASE, HST		1					
1	T2195-21142	CASE, HST		1				<----	
1	T2195-21143	CASE, HST		1				<--->	
1	T2195-21144	CASE, HST		1				<----	
2	01517-51030	STUD		2					
3	02176-50100	NUT		2					M10X1.25
4	04512-50100	WASHER, SPRING		2					M10
5	01133-51035	BOLT, WASHER		8					M10X1.25
5	01177-51035	BOLT, WASHER		8				<----	M10XP1.25(9T /스프링
6	05012-01020	PIN, PARALLEL		2					
7	32210-2758-1	PLUG		4					

----> Old replace New
<-X-> Not interchangeable
<-O-> Interchangeable with another part(s)
<---- New replace Old
<---> Interchangeable

CK30H-T160A

MID CASE GROUP

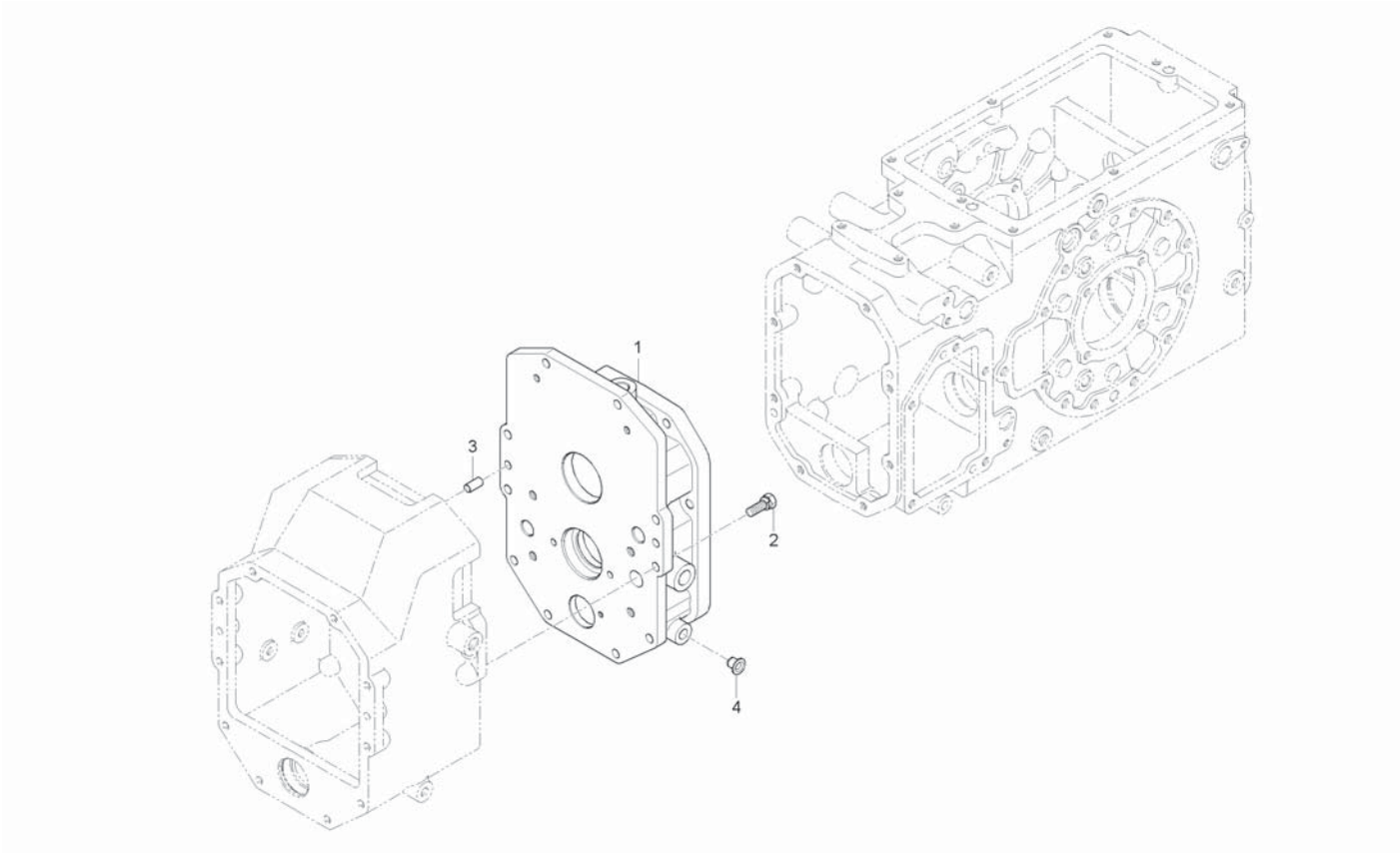

A : CK35-EU , B : CK35H-EU

No.	Part Number	Desciption	Q'TY A	Q'TY B	Q'TY C	Q'TY D	Q'TY E	I.C	Remark
1	T2195-21152	CASE, HST MID		1					
1	T2195-21153	CASE, HST MID		1				<----	
1	T2195-21154	CASE, MID		1				<-X->	
2	01133-51035	BOLT, WASHER		10					M10X1.25
2	01177-51035	BOLT, WASHER		10				<----	M10XP1.25(9T /스프링
3	05012-01020	PIN, PARALLEL		2					
4	32210-2758-1	PLUG		2					

----> Old replace New
<-X-> Not interchangeable
<-O-> Interchangeable with another part(s)
<---- New replace Old
<---> Interchangeable

CK30M-T160A

MID CASE GROUP

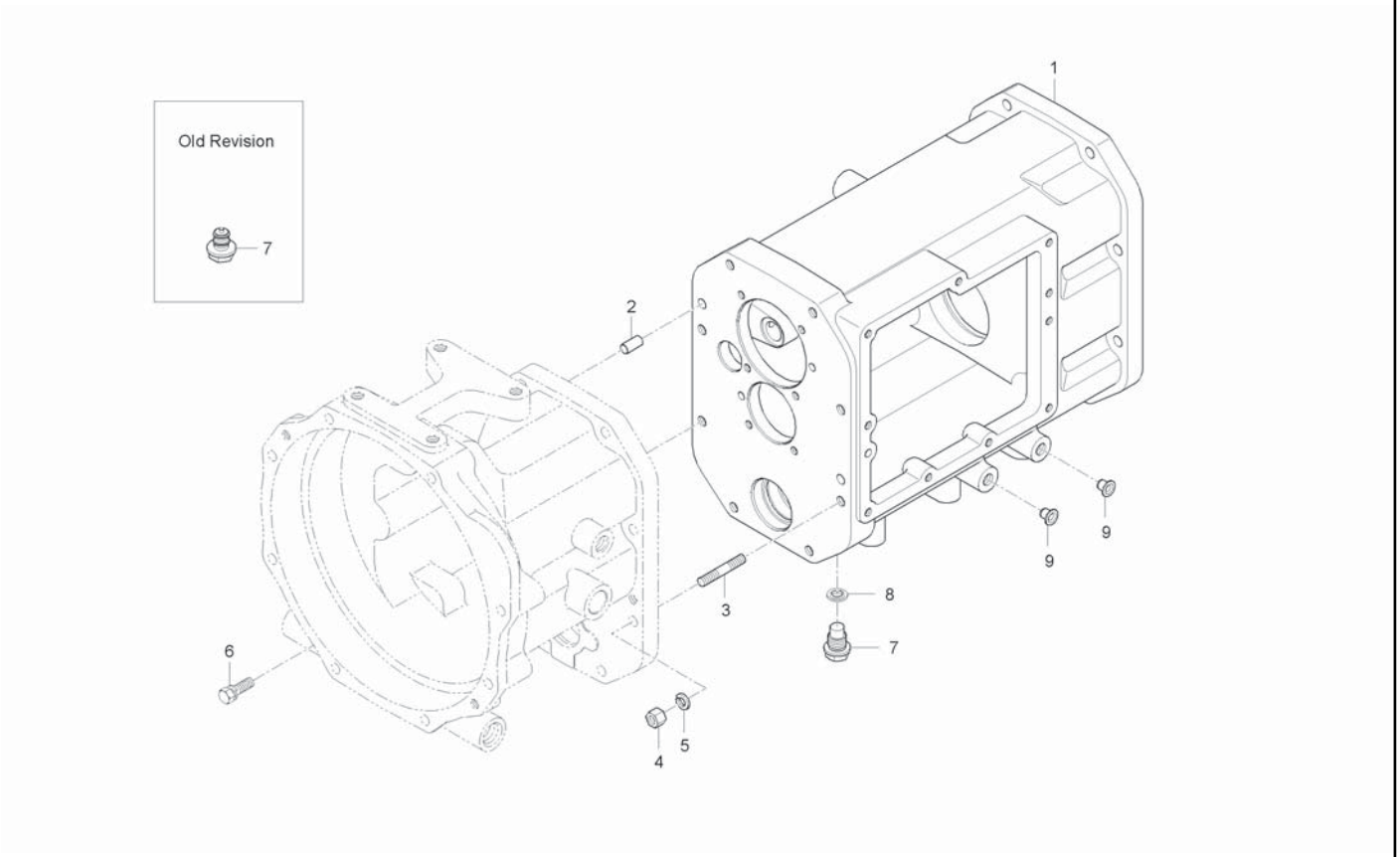

A : CK35-EU , B : CK35H-EU

No.	Part Number	Desciption	Q'TY A	B	C	D	E	I.C	Remark
1	T2185-21153	CASE, MID	1						
1	T2185-21154	CASE, MID	1					<----	
1	T2185-21155	CASE,MIDDLE	1					<--->	
2	05012-01020	PIN, PARALLEL	2						
3	01517-51035	STUD	2						
4	02176-50100	NUT	2						
5	04512-50100	WASHER, SPRING	2						
6	01133-51040	BOLT, WASHER	6						
7	T4260-14271	PLUG, MAGNET	1						
7	T4125-14261	PLUG, MAGNET	1					<--->	
7	T4930-14261	PLUG	1					<--->	
8	04717-02650	WASHER, SEAL	1						
9	32210-2758-1	PLUG	11						

----> Old replace New
<-X-> Not interchangeable
<-O-> Interchangeable with another part(s)
<---- New replace Old
<---> Interchangeable

CK30H-T170A TRANSMISSION CASE GROUP

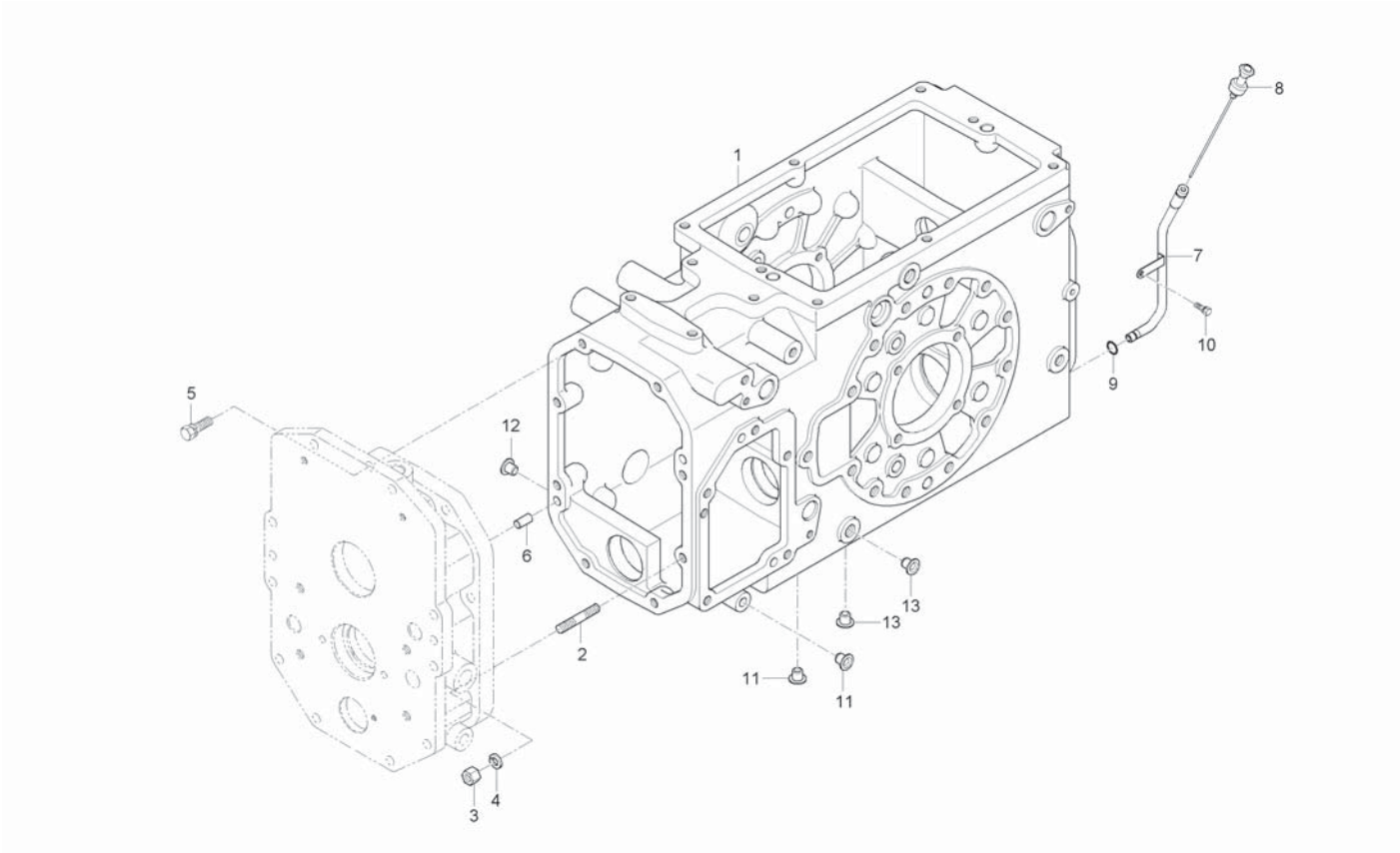

A : CK35-EU , B : CK35H-EU

No.	Part Number	Desciption	Q'TY A	Q'TY B	Q'TY C	Q'TY D	Q'TY E	I.C	Remark
1	T2195-21112	CASE, TRANSMISSION		1					
1	T2195-21113	CASE, TRANSMISSION		1				<----	
1	T2195-21114	CASE, TRANSMISSION		1				<----	
1	T2195-21115	CASE, TRANSMISSION		1				<-0->	
1	T2195-21116	CASE, TRANSMISSION		1				<----	
1	T2195-21117	CASE, TRANSMISSION		1 ~GT8900058				<--->	
1	T2195-21118	CASE, TRANSMISSION		1 GT8900059~				<-0->	
1	T2195-21119	CASE, TRANSMISSION		1				<----	
1	T2195-2111A	CASE,TRANSMISSION		1				<----	
1	T2195-2111B	CASE,TRANSMISSION		1				<----	
2	01517-51035	STUD		2					
3	02176-50100	NUT		2					M10X1.25
4	04512-50100	WASHER, SPRING		2					M10
5	01133-51040	BOLT, WASHER		6					M10XP1.25X40
5	01177-51045	BOLT		6				<----	M10XP1.25(9T /스프링
6	05012-01020	PIN, PARALLEL		2					
7	T2185-25452	GUIDE, OIL GAUGE		1					
7	T2185-25453	GUIDE, OIL GAUGE		1				<--->	
8	T2185-25902	OIL GAUGE		1					

----> Old replace New
<-X-> Not interchangeable
<-O-> Interchangeable with another part(s)
<---- New replace Old
<---> Interchangeable

CK30H-T170A

TRANSMISSION CASE GROUP

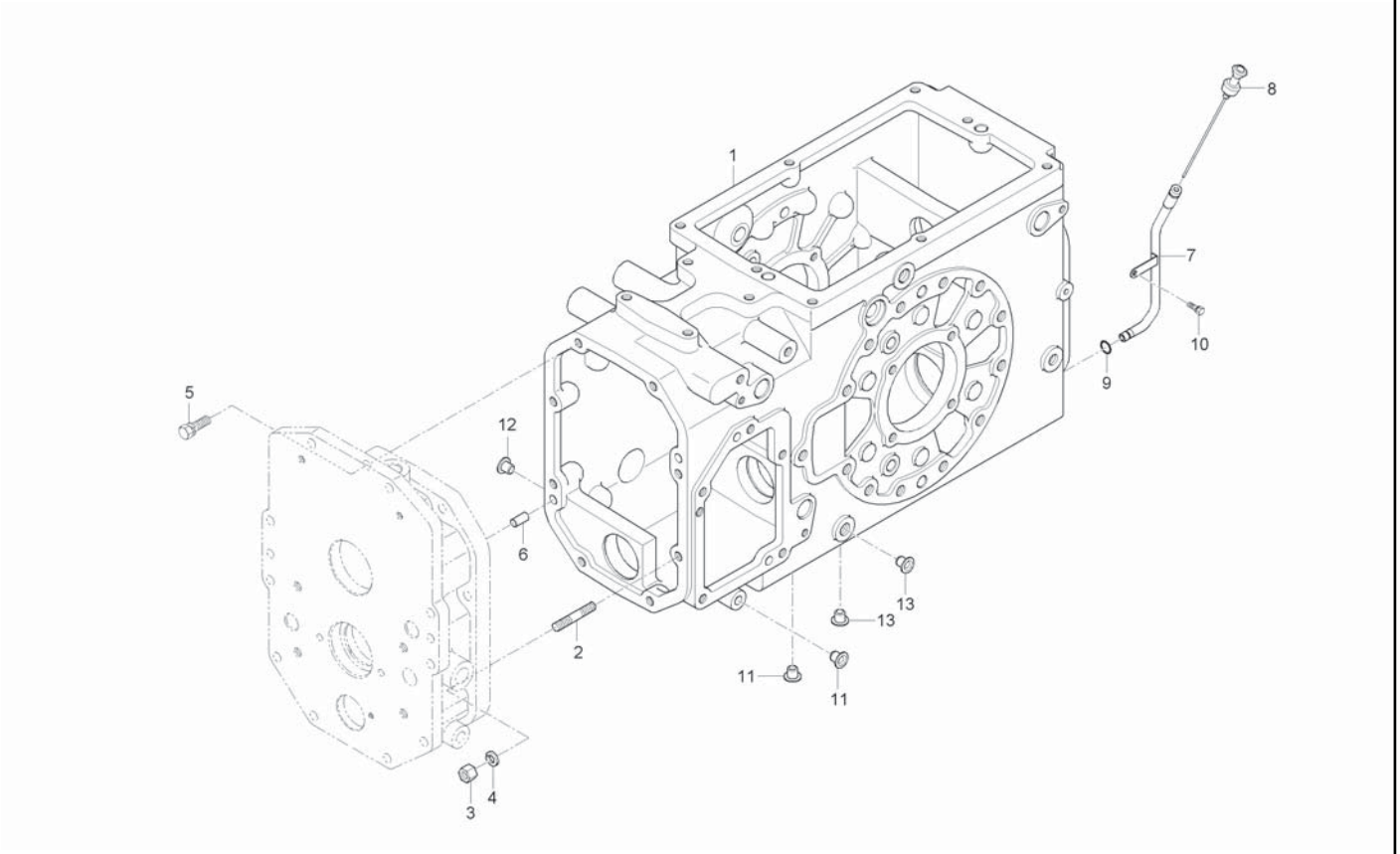

A : CK35-EU , B : CK35H-EU

No.	Part Number	Desciption	Q'TY A	Q'TY B	Q'TY C	Q'TY D	Q'TY E	I.C	Remark
8	T2185-25902OE	OIL GAUGE		1				<----	
9	04811-10110	O RING		1					
10	01023-50612	BOLT, WASHER		1					M6*P1.0
11	34150-2758-1	PLUG		5					
12	32210-2758-1	PLUG		1					
13	31220-1429-3	PLUG		4					

----> Old replace New
<-X-> Not interchangeable
<-O-> Interchangeable with another part(s)
<---- New replace Old
<---> Interchangeable

CK30ME-T170A TRANSMISSION CASE GROUP

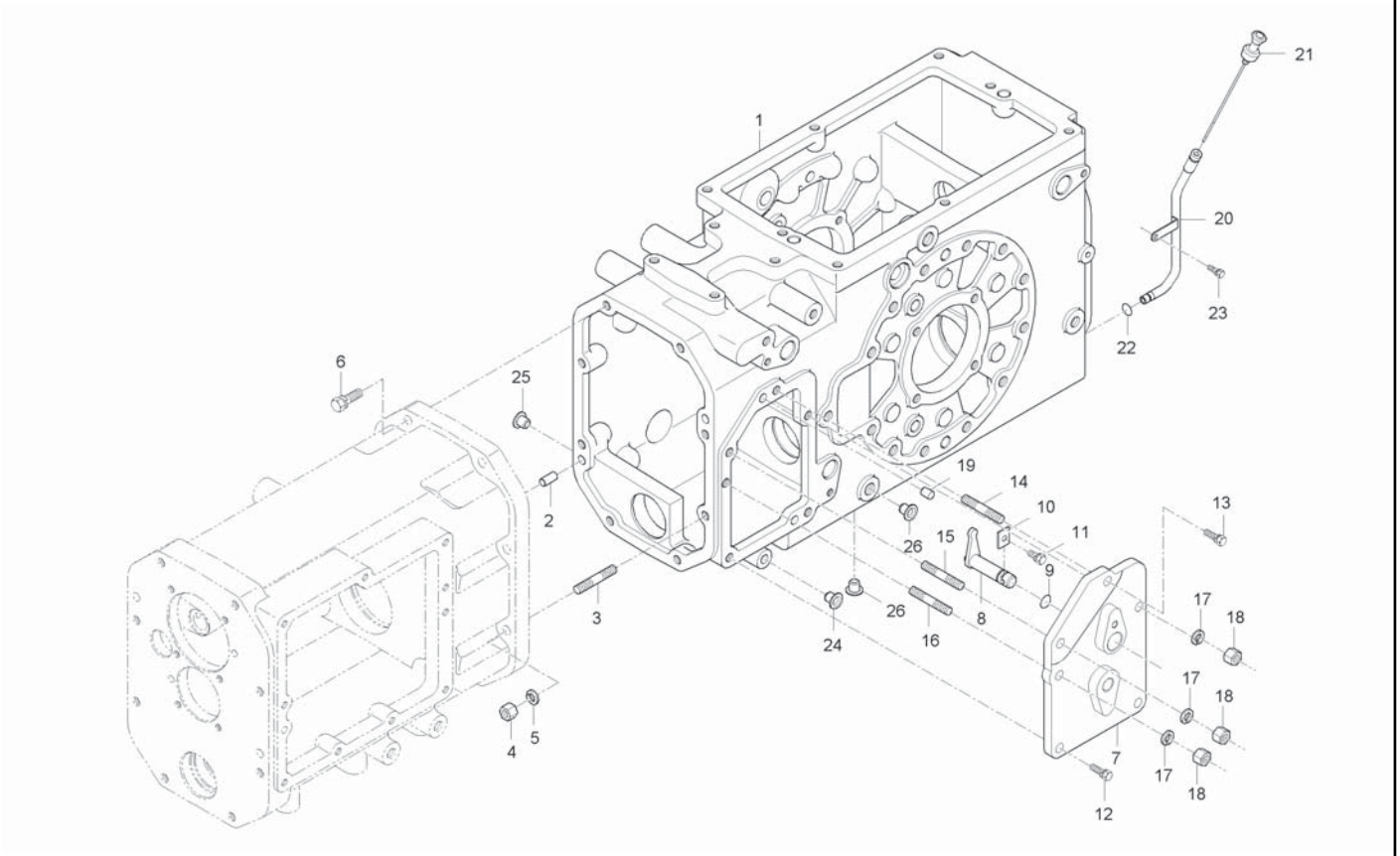

A : CK35-EU , B : CK35H-EU

No.	Part Number	Desciption	Q'TY A	Q'TY B	Q'TY C	Q'TY D	Q'TY E	I.C	Remark
1	T2185-21117	CASE, TRANSMISSION	1 ~GT8100064						
1	T2185-21119	CASE, TRANSMISSION	1 GT8100065~					<-0->	
2	05012-01020	PIN, PARALLEL	2						
3	01517-51035	STUD	2						
4	02176-50100	NUT	2						
5	04512-50100	WASHER, SPRING	2						
6	01133-51040	BOLT, WASHER	6						
7	T2185-23233	COVER	1						
8	T2181-23142	ARM, CREEP SHIFT	1						
9	04811-00160	O RING	1						
10	35265-2321-1	STOPPER	1						
11	01123-50820	BOLT, WASHER	1						
12	01133-51032	BOLT, WASHER	2						
13	01133-51040	BOLT, WASHER	1						
14	01517-51035	STUD	1						
14	01517-51030	STUD	1					<--->	
15	01517-51040	STUD	1						
16	01517-51030	STUD	1						
17	04512-50100	WASHER, SPRING	3						

----> Old replace New
<-X-> Not interchangeable
<-O-> Interchangeable with another part(s)
<---- New replace Old
<---> Interchangeable

CK30ME-T170A TRANSMISSION CASE GROUP

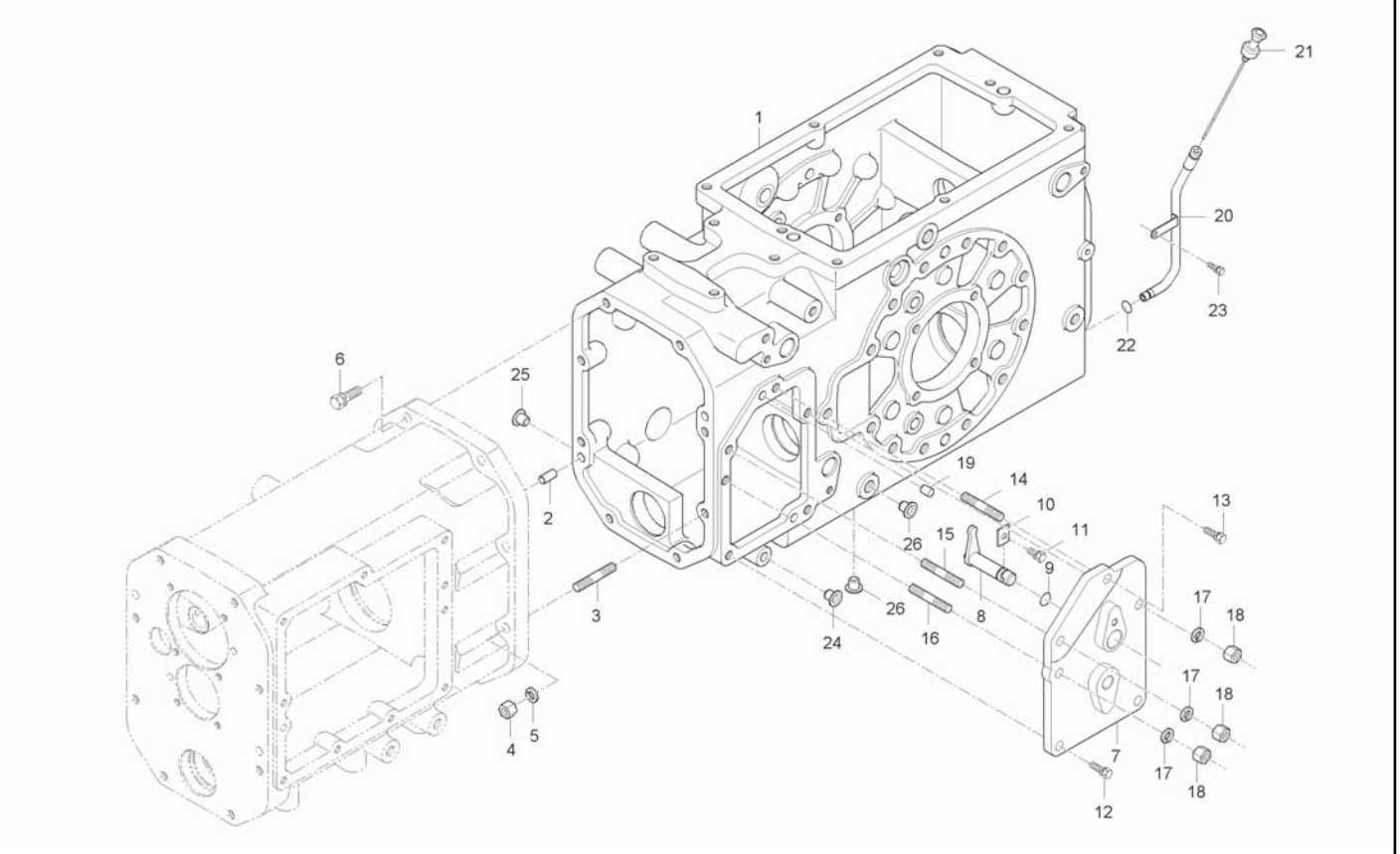

A : CK35-EU , B : CK35H-EU

No.	Part Number	Desciption	Q'TY A	B	C	D	E	I.C	Remark
18	02176-50100	NUT	3						
19	05012-01018	PIN, PARALLEL	2						
20	T2185-25452	GUIDE, OIL GAUGE	1						
20	T2185-25453	GUIDE, OIL GAUGE	1					<--->	
21	T2185-25902OE	OIL GAUGE	1						
22	04811-10110	O RING	1						
23	01023-50612	BOLT, WASHER	1						
24	34150-2758-1	PLUG	1						
25	32210-2758-1	PLUG	1						
26	31220-1429-3	PLUG	4						

----> Old replace New
<-X-> Not interchangeable
<-O-> Interchangeable with another part(s)
<---- New replace Old
<---> Interchangeable

CK30H-T180A

MAIN SHAFT GROUP

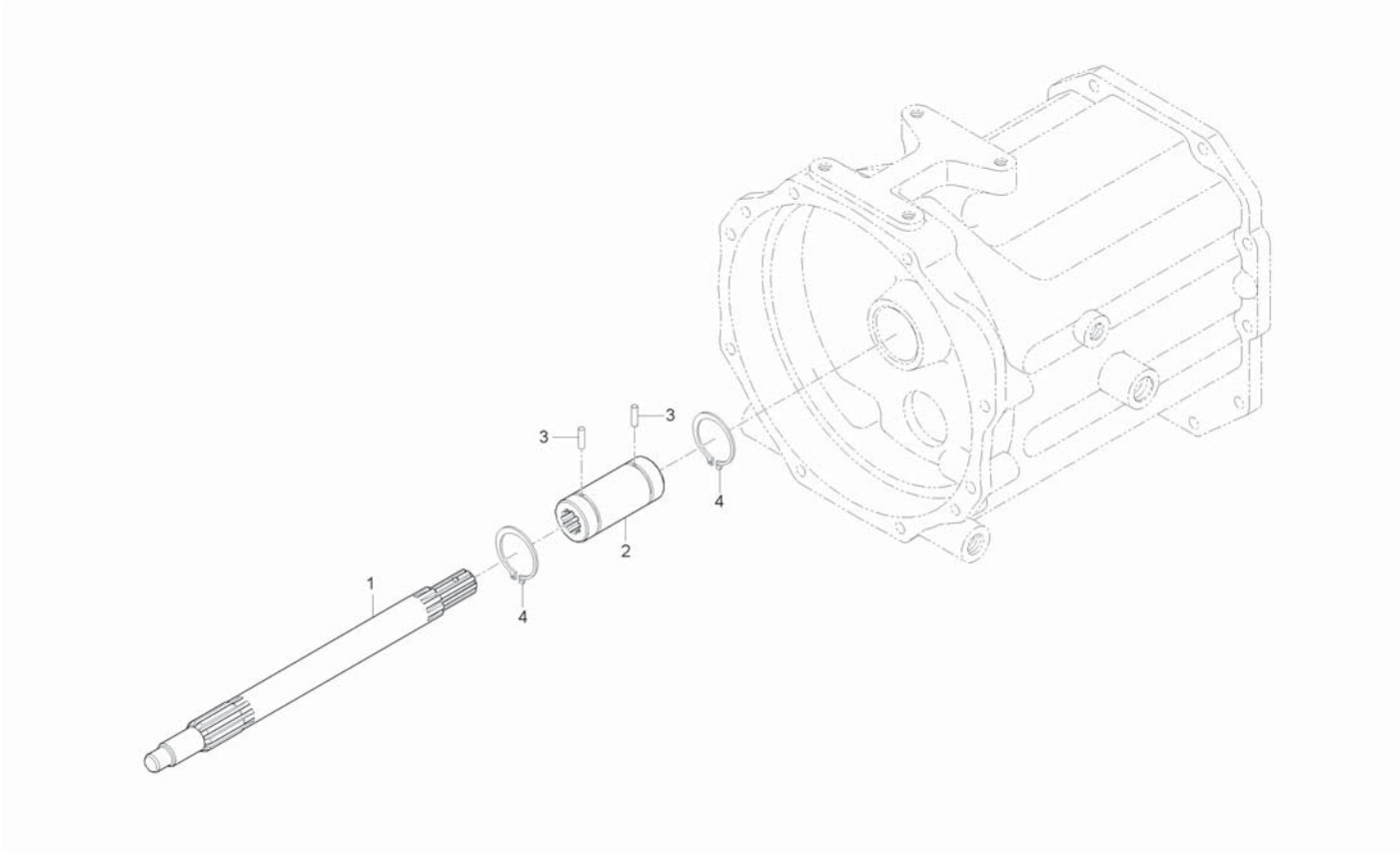

A : CK35-EU , B : CK35H-EU

No.	Part Number	Desciption	Q'TY A	Q'TY B	Q'TY C	Q'TY D	Q'TY E	I.C	Remark
1	T2195-21622	SHAFT, MAIN		1					
1	T2195-21623	SHAFT, MAIN		1				<-X->	
1	T2195-21624	SHAFT, MAIN		1				<----	
1	T2195-21625	SHAFT, MAIN		1				<----	
2	T2195-21632	COUPLING		1					
3	05012-00530	PIN, PARALLEL		2					
4	04612-00340	SNAP RING		2					

----> Old replace New
<-X-> Not interchangeable
<-O-> Interchangeable with another part(s)
<---- New replace Old
<---> Interchangeable

CK30H-T190A

HST OUTPUT SHAFT GROUP

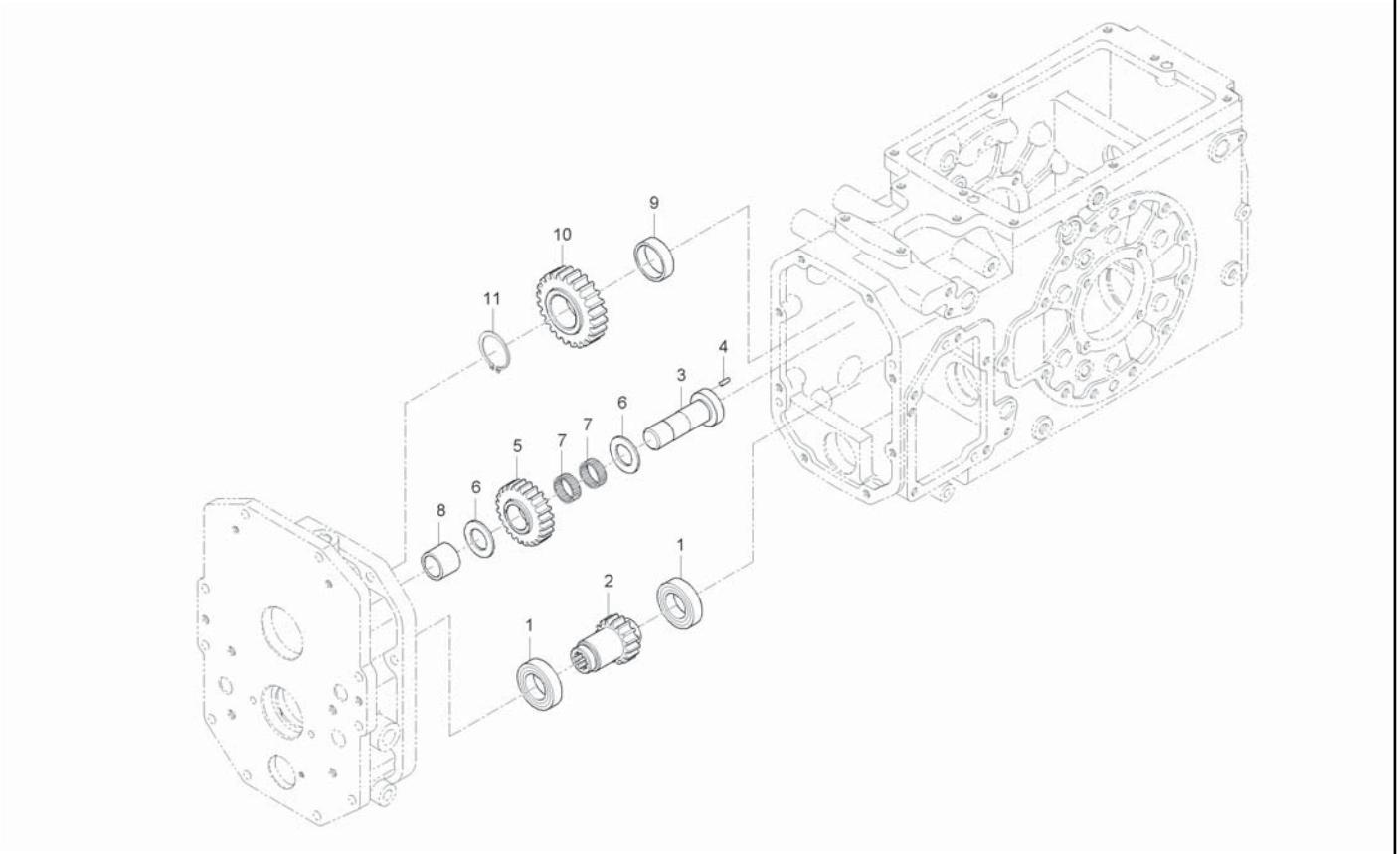

A : CK35-EU , B : CK35H-EU

No.	Part Number	Desciption	Q'TY A	Q'TY B	Q'TY C	Q'TY D	Q'TY E	I.C	Remark
1	08101-06006	BALL BEARING		2					#6006
2	T2195-21423	GEAR, 15		1					
3	T2195-21443	SHAFT, HST COUNTER		1					
4	05012-00510	PIN, DOWEL		2					
5	T2195-21432	GEAR, 22		1					
6	T4620-22731	COLLAR, THRUST		2					
7	08822-53013	NEEDLE BEARING		2					
8	T2195-21411	SPACER		1					
9	T2195-21471	SPACER		1					
10	T2195-21452	GEAR, 27		1					
11	04612-00400	SNAP RING		1					

----> Old replace New
<-X-> Not interchangeable
<-O-> Interchangeable with another part(s)

<---- New replace Old
<---> Interchangeable

CK30M-T200A

SHUTTLE SYSTEM GROUP

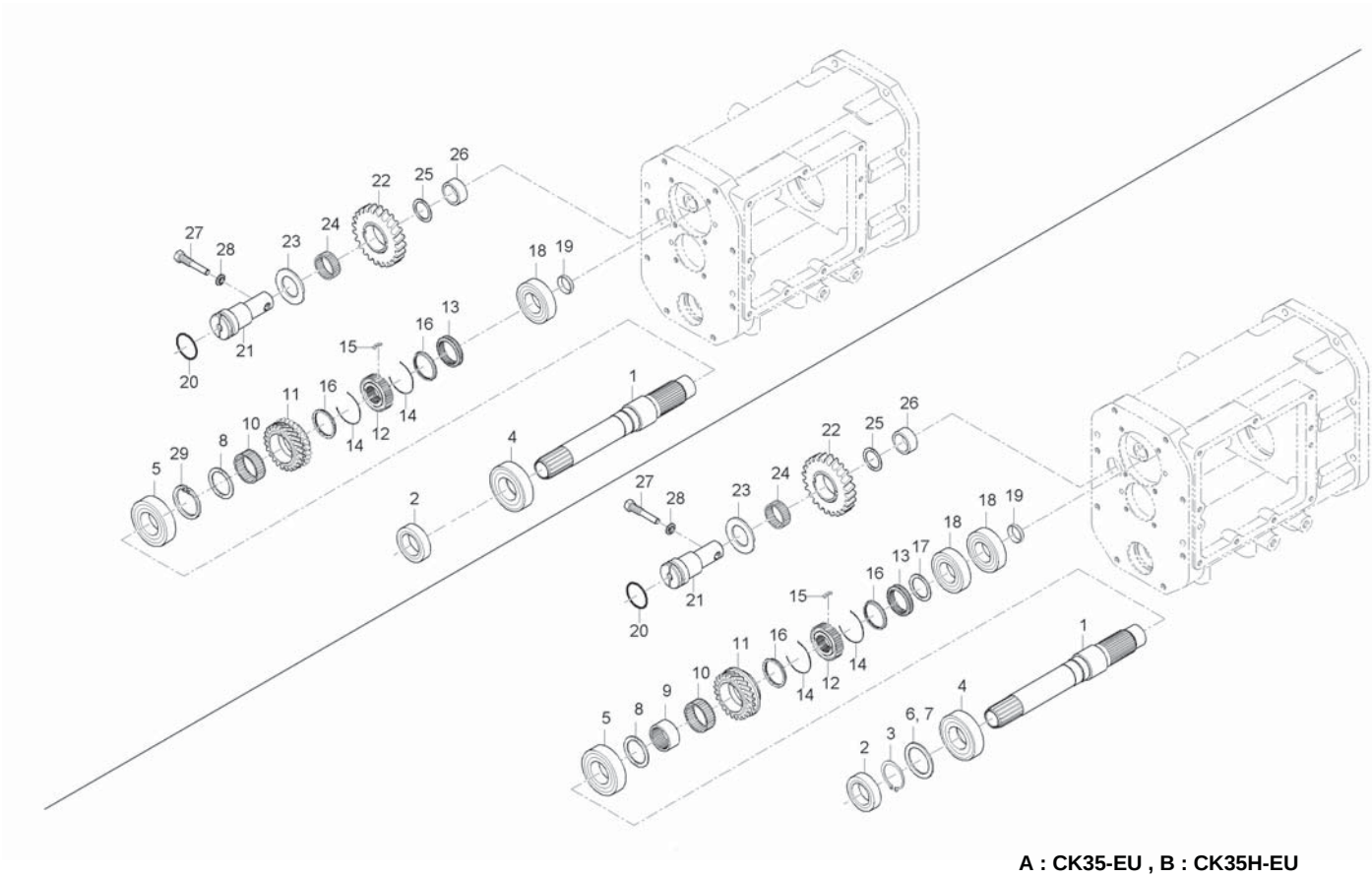

A : CK35-EU , B : CK35H-EU

No.	Part Number	Desciption	Q'TY A	Q'TY B	Q'TY C	Q'TY D	Q'TY E	I.C	Remark
1	T2185-22511	SHAFT, SHUTTLE	1 ~JT8100013						
1	T2185-22512	SHAFT, SHUTTLE	1 JT8100014~					<-0->	
2	09503-86211	SEAL, OIL	1						
3	04612-00400	SNAP RING	1						
4	08101-06008	BALL BEARING	1						
5	08101-06208	BALL BEARING	1						
6	37650-4317-0	SHIM, 0.1	2						
7	37650-4314-0	SHIM, 0.2	2						
8	T2185-22531	COLLAR, THRUST	1						
9	T2185-22521	RING, IN	1						
10	08824-55017	NEEDLE BEARING	1 ~JT8100013						
10	08824-04718	NEEDLE BEARING	1 JT8100014~					<-0->	
11	T2185-22626	GEAR, 28	1 ~JT8100013						
11	T2185-22627	GEAR, 28	1 JT8100014~					<-0->	
12	T2185-22811	HUB, SPLINE	1 ~JT8100013						
12	T2185-22812	HUB, SPLINE	1 JT8100014~					<-0->	
13	T2185-22844	SHIFT	1 ~JT8100013						
13	T2185-22845	SHIFTER	1 JT8100014~					<-0->	
14	T2185-22823	SPRING, SYNCHRONIZER	2						

----> Old replace New
<-X-> Not interchangeable
<-0-> Interchangeable with another part(s)
<---- New replace Old
<---> Interchangeable

CK30M-T200A

SHUTTLE SYSTEM GROUP

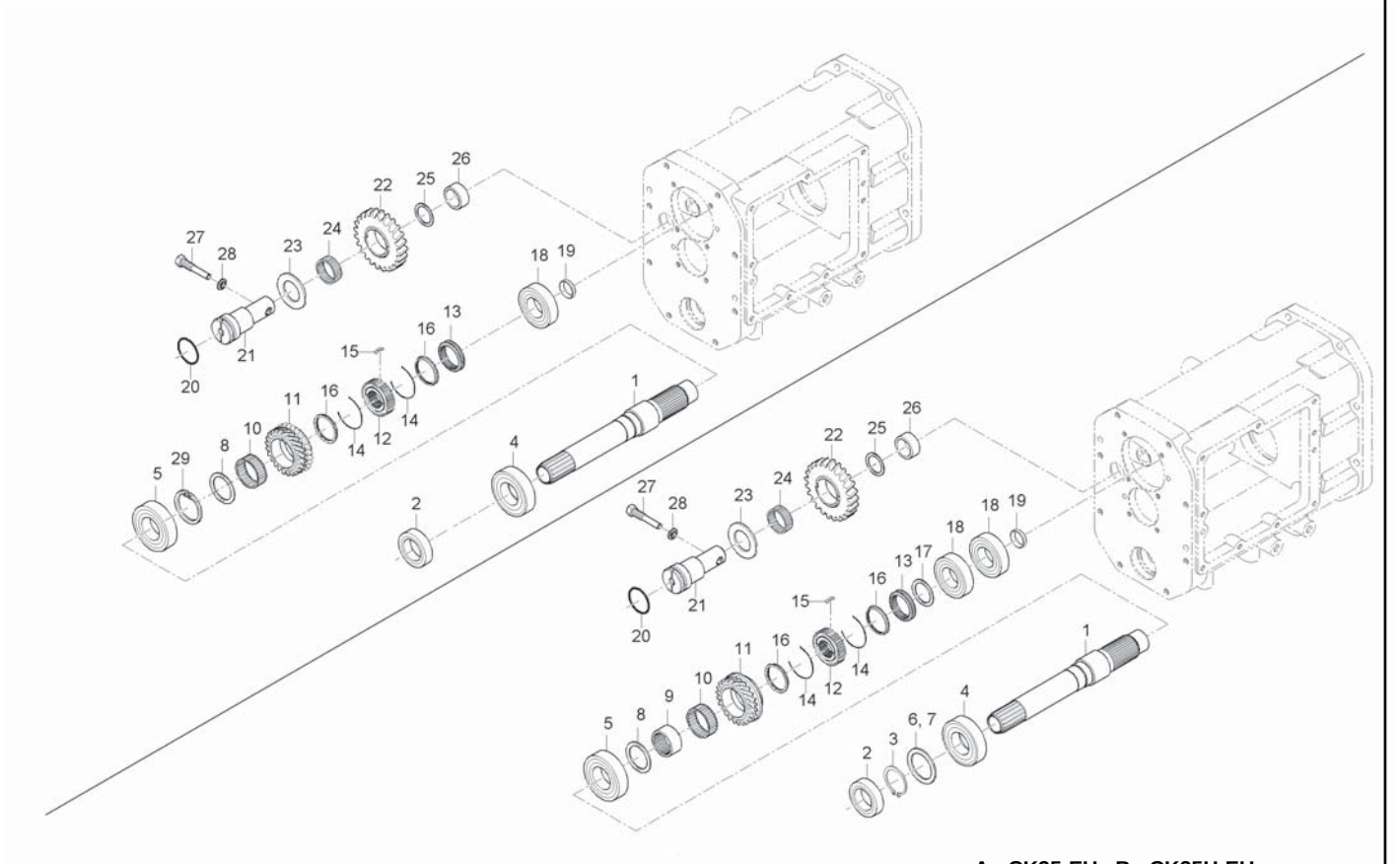

A : CK35-EU , B : CK35H-EU

No.	Part Number	Desciption	Q'TY A	Q'TY B	Q'TY C	Q'TY D	Q'TY E	I.C	Remark
15	T2610-21812	KEY, SYNCHRONIZER	3						
16	T2185-22852	SYNCHRONIZER RING	2						
17	T2185-22581	COLLAR, THRUST	1						
18	08101-06907	BALL BEARING	2 ~JT8100013						
18	08101-06907	BALL BEARING	1 JT8100014~					<-0->	
19	T2440-21361	SEAL, OIL	1						
20	04811-50250	O RING	1						
21	T2185-22712	SHAFT, REVERSE	1						
22	T2185-22723	GEAR, 25	1						
23	T4620-22731	COLLAR, THRUST	1						
24	08822-53020	NEEDLE BEARING	1						
25	31365-2278-1	COLLAR	1						
26	T2185-22771	SPACER	1						
27	T4620-22791	BOLT, CLAMPING	1						
28	04717-01000	WASHER, SEAL	1						
29	T4810-22852	SNAP RING	2						

----> Old replace New
<-X-> Not interchangeable
<-O-> Interchangeable with another part(s)
<---- New replace Old
<---> Interchangeable

CK30M-T210A

SHAFT 1 GROUP

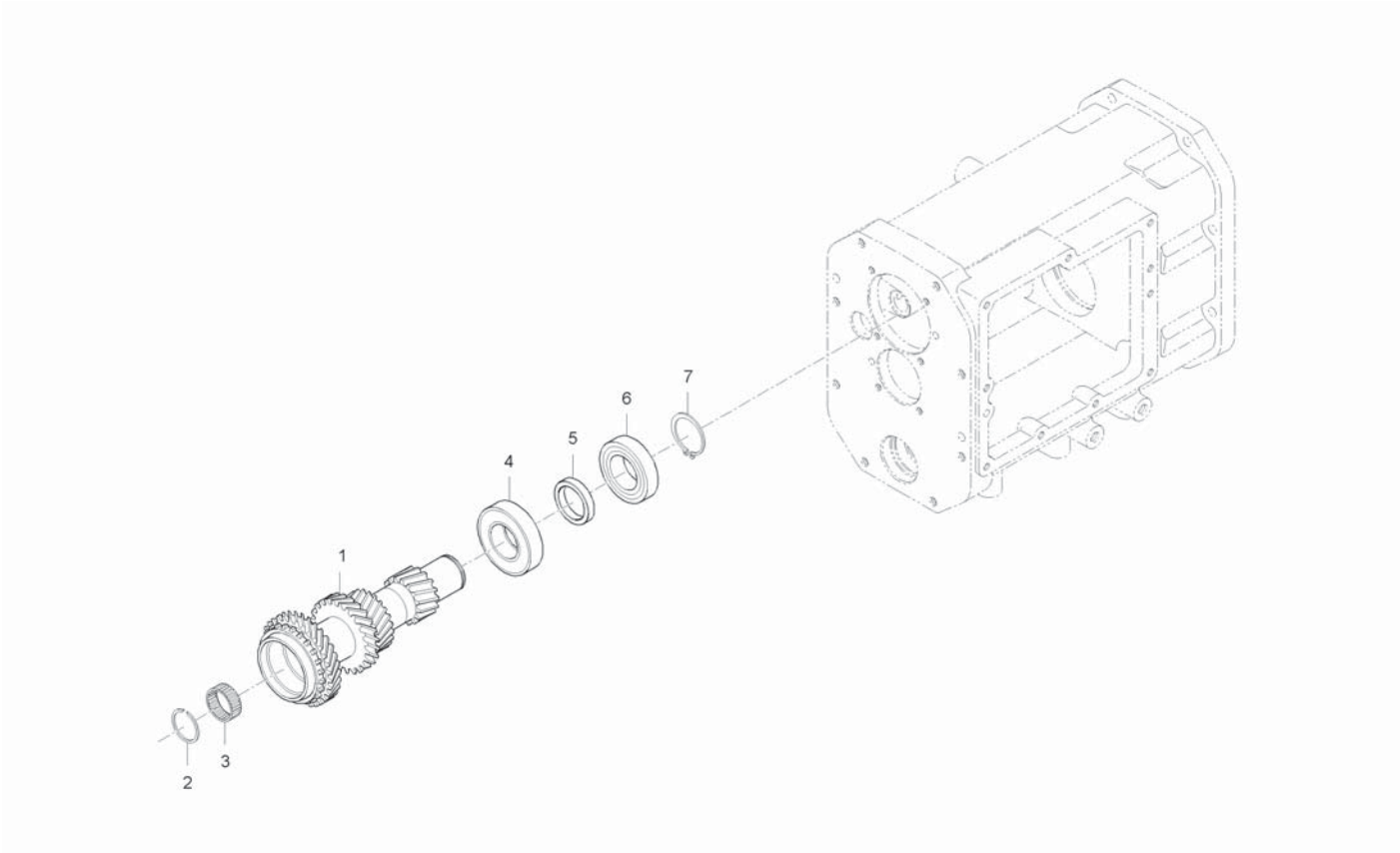

A : CK35-EU , B : CK35H-EU

No.	Part Number	Desciption	Q'TY A	Q'TY B	Q'TY C	Q'TY D	Q'TY E	I.C	Remark
1	T2185-21714	SHAFT, MAIN SHIFT GEAR	1 ~JT8100013						
1	T2185-21715	SHAFT, MAIN SHIFT GEAR	1 JT8100014~					<-0->	
2	T2305-21891	SNAP RING	1						
3	08822-53017	NEEDLE BEARING	1						
4	08101-06207	BALL BEARING	1						
5	T2185-21781	SPACER	1						
6	08101-06007	BALL BEARING	1						
7	04612-00350	SNAP RING	1						

----> Old replace New
<-X-> Not interchangeable
<-O-> Interchangeable with another part(s)
<---- New replace Old
<---> Interchangeable

CK30M-T220A

SHAFT 2 GROUP

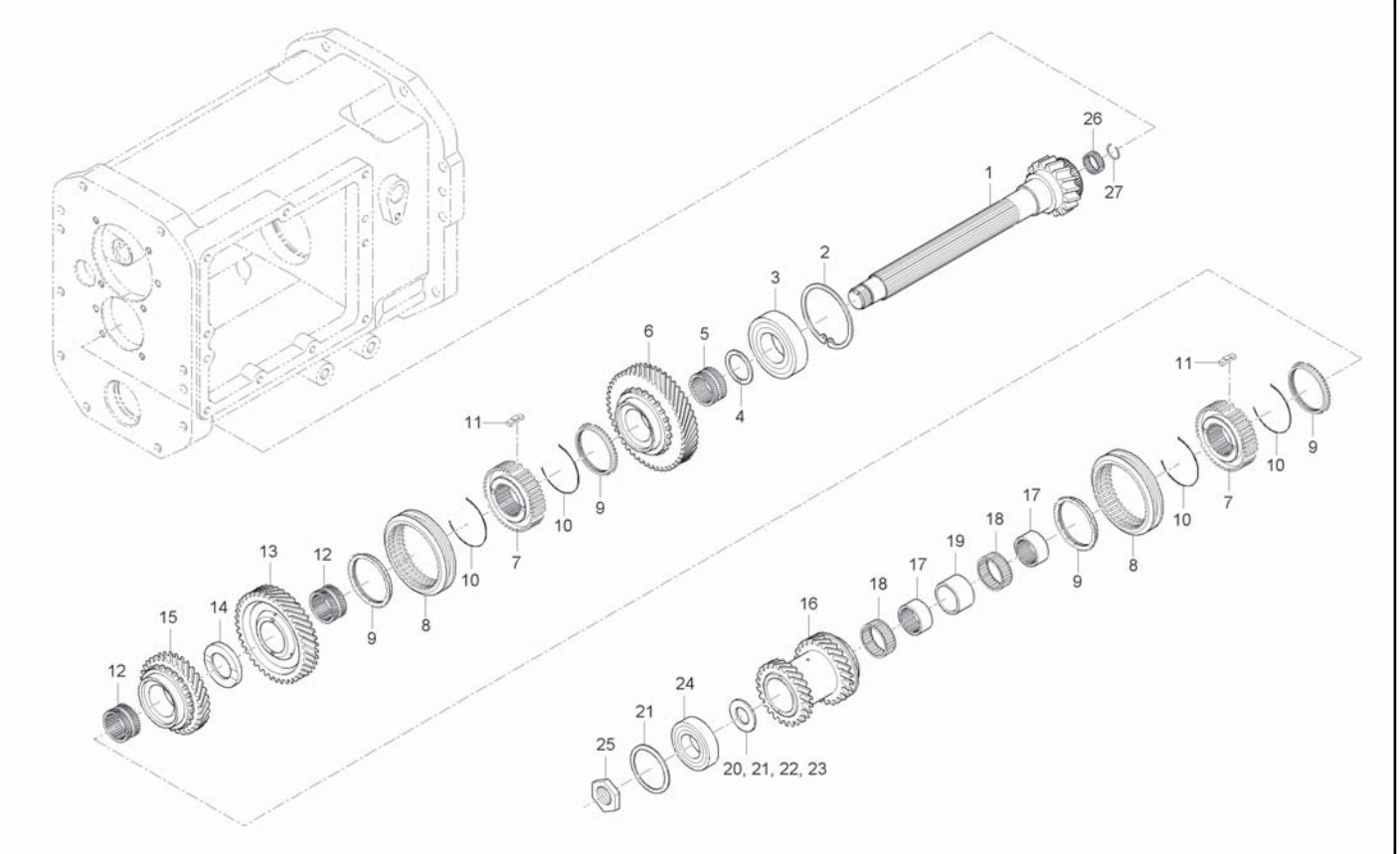

A : CK35-EU , B : CK35H-EU

No.	Part Number	Desciption	Q'TY A	Q'TY B	Q'TY C	Q'TY D	Q'TY E	I.C	Remark
1	T2185-21514	SHAFT, GEAR 18	1						
2	04611-00800	SNAP RING	1						
3	08101-06307	BALL BEARING	1						
4	T2305-25191	COLLAR, THRUST	1						
5	T2185-21531	RING, IN	1						
6	T2185-21611	GEAR, 43	1						
7	T2185-21651	HUB, SYNCHRONIZER	2						
8	T2610-21754	SHIFT	2						
9	T4240-21792	SYNCHRONIZER RING	4						
10	38360-2178-1	SPRING	4						
11	T2610-21812	KEY, SYNCHRONIZER	6						
12	T2440-21901	RING, IN	2						
13	T2185-21621	GEAR, 39	1						
14	T2185-21521	COLLAR, THRUST	1						
15	T2185-21631	GEAR, 33	1						
16	T2185-21643	GEAR, 26X27	1						
17	38435-2179-1	RING, IN	2						
18	08823-54027	NEEDLE BEARING	2						
19	T2185-21561	SPACER	1						

----> Old replace New
<-X-> Not interchangeable
<-O-> Interchangeable with another part(s)
<---- New replace Old
<---> Interchangeable

CK30M-T220A

SHAFT 2 GROUP

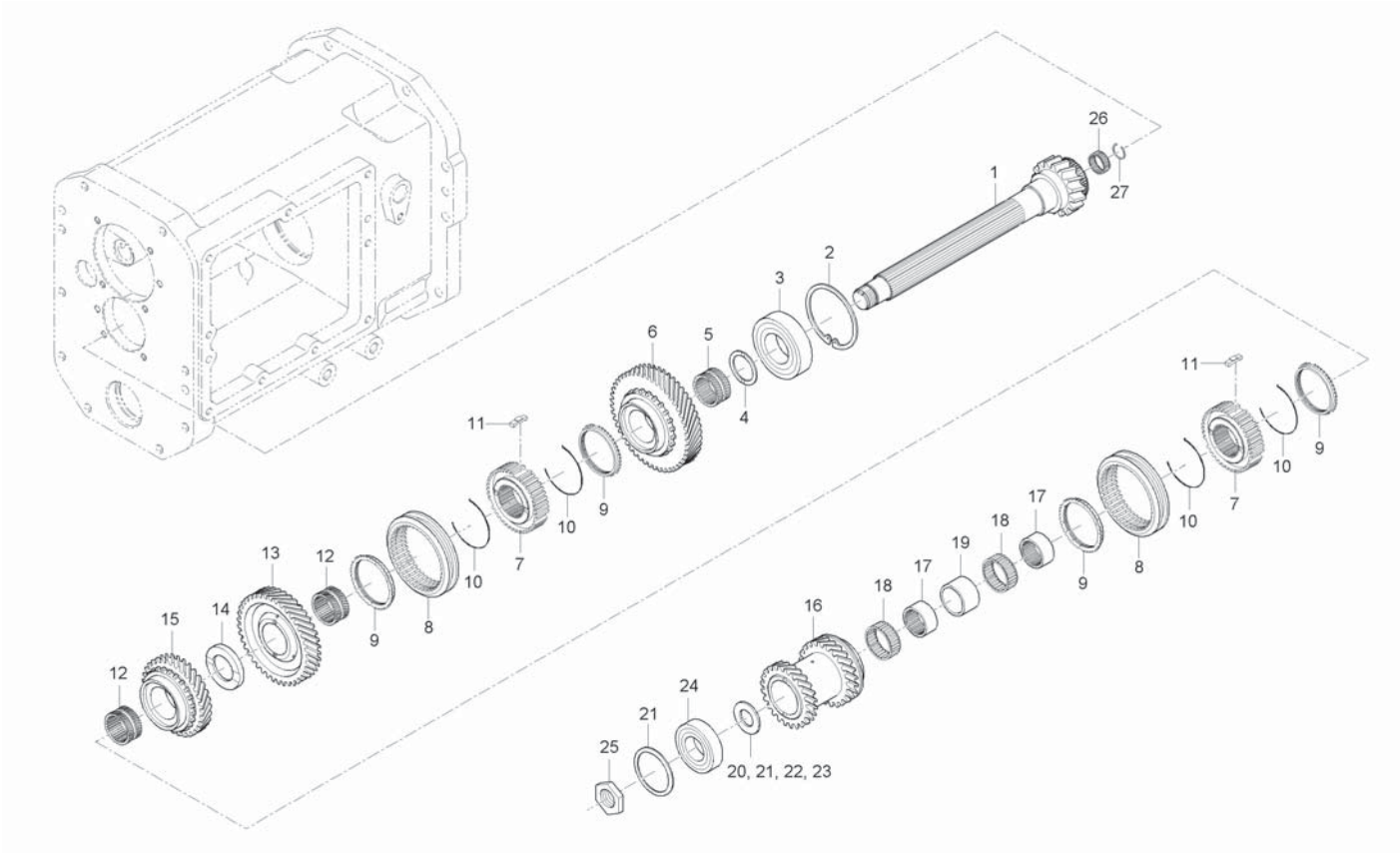

A : CK35-EU , B : CK35H-EU

No.	Part Number	Desciption	Q'TY A	Q'TY B	Q'TY C	Q'TY D	Q'TY E	I.C	Remark
20	T2305-21762	COLLAR, THRUST	1						
21	K5400-14571	SHIM	1						
22	K5400-14581	SHIM	1						
23	K5400-14591	SHIM	1						
24	08101-06305	BALL BEARING	1						
25	T2350-25361	NUT, 24	1						
26	08822-02617	NEEDLE BEARING	1						
27	T2360-44591	SNAPRING 1, FR WHEEL DRIVE SHAFT	1						

----> Old replace New
<-X-> Not interchangeable
<-O-> Interchangeable with another part(s)
<---- New replace Old
<---> Interchangeable

CK30H-T230A

SPEED SHIFT FORK GROUP

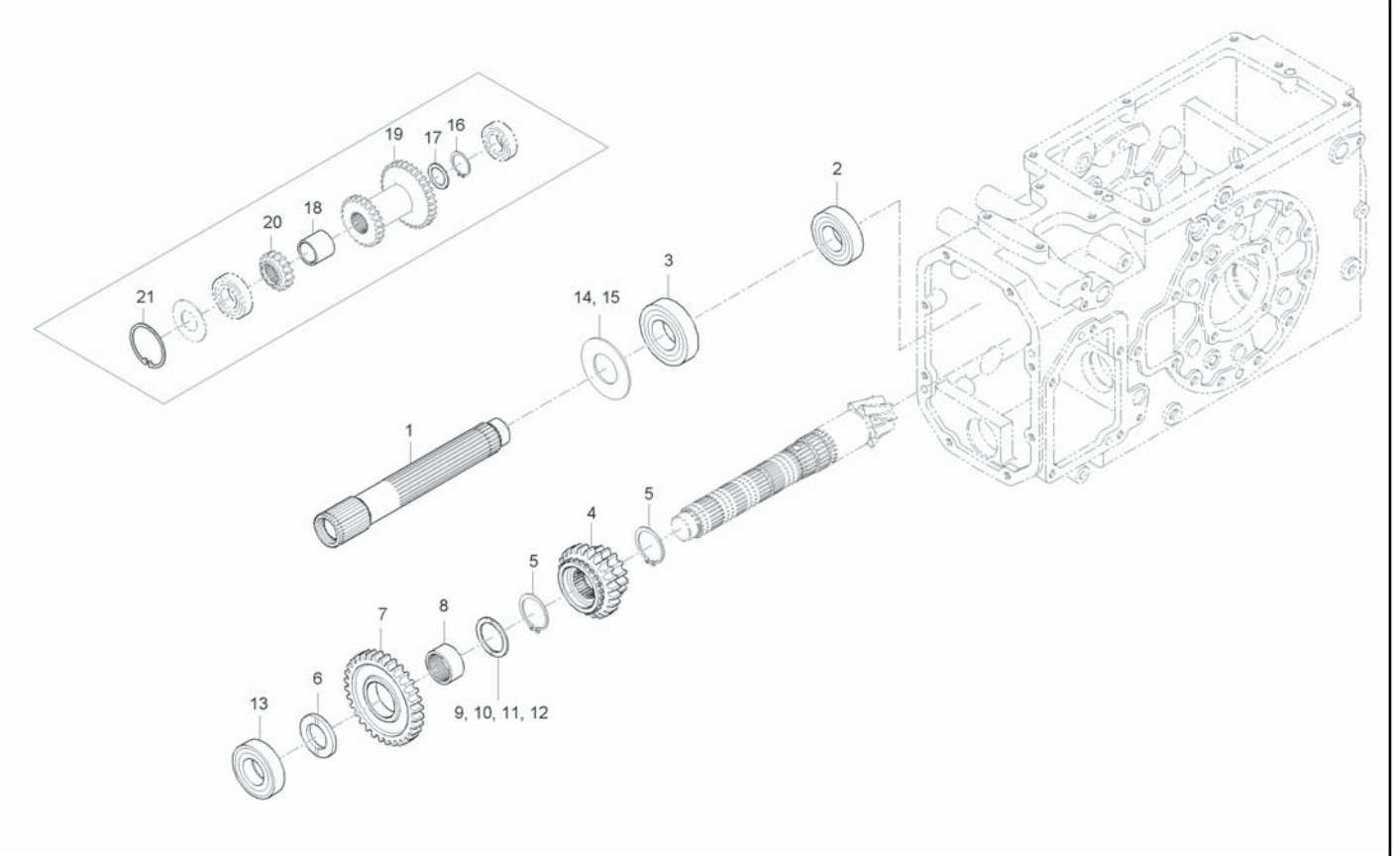

A : CK35-EU , B : CK35H-EU

No.	Part Number	Desciption	Q'TY A	Q'TY B	Q'TY C	Q'TY D	Q'TY E	I.C	Remark
1	T2195-23711	SHAFT, GEAR 18X27X36		1					
2	08101-06206	BALL BEARING		1					#6206
3	08101-06208	BALL BEARING		1					#6208
4	T2195-23521	GEAR, 26X17		1					
5	04612-00300	SNAP RING		2					
6	T4810-22581	COLLAR, THRUST		1					
7	T2195-23533	GEAR, 34		1					
8	T2195-23541	RING, IN		1					
9	T2195-23561	COLLAR, THRUST		1					
10	T2195-23671	COLLAR, THRUST		1					
11	T2195-23681	COLLAR, THRUST		1					
12	T2195-23691	COLLAR, THRUST		1					
13	08101-06205	BALL BEARING		1					DIA25
14	T4520-42351	SHIM, 0.1		1					
15	T4520-42361	SHIM, 0.2		1					
16	T2615-25691	SNAP RING		1					
17	T2615-25681	COLLAR		1					
18	T2195-23661	SPACER		1					
19	T2195-23633	GEAR, 27X36		1					

----> Old replace New
<-X-> Not interchangeable
<-O-> Interchangeable with another part(s)
<---- New replace Old
<---> Interchangeable

CK30H-T230A

SPEED SHIFT FORK GROUP

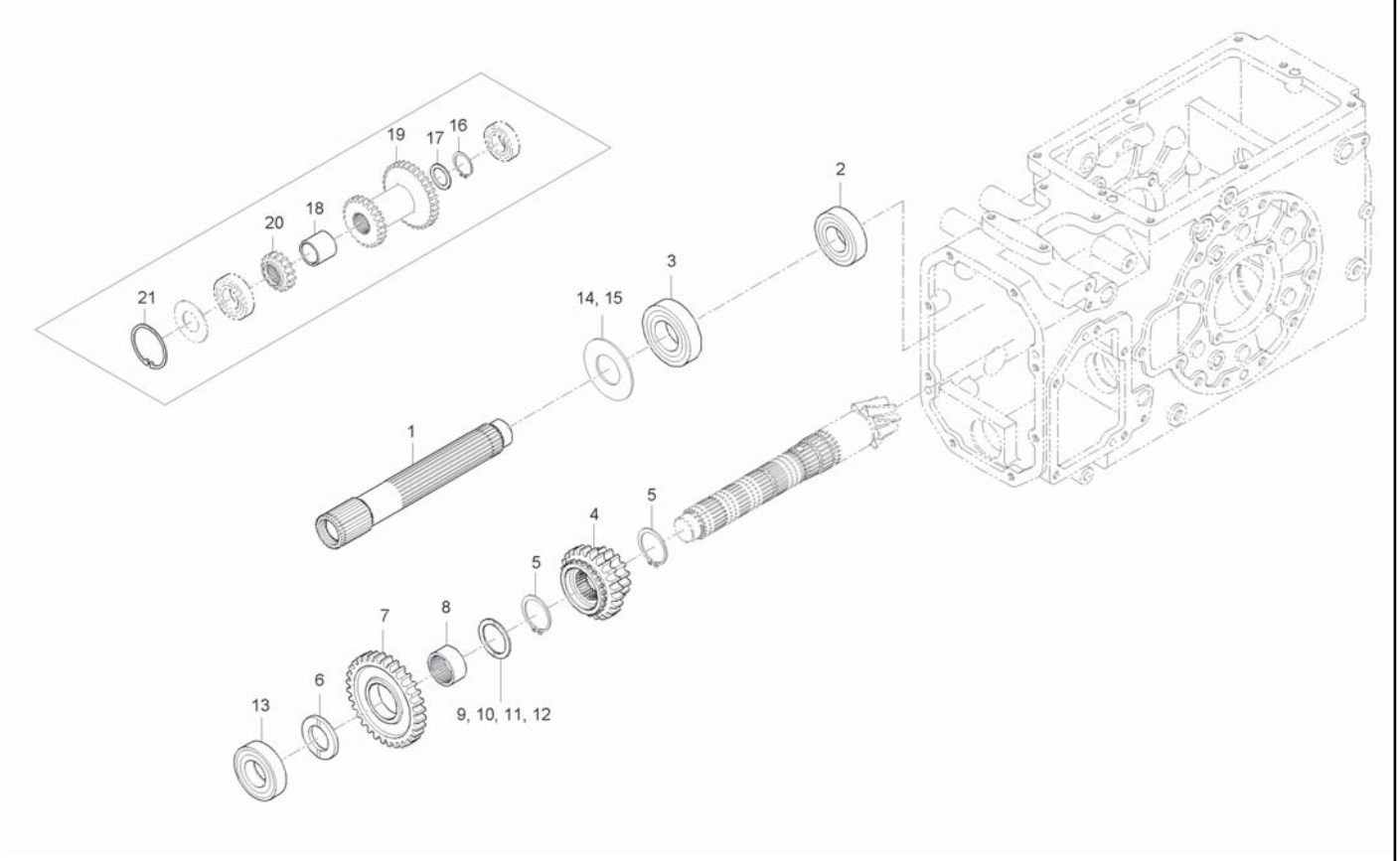

A : CK35-EU , B : CK35H-EU

No.	Part Number	Desciption	Q'TY A	Q'TY B	Q'TY C	Q'TY D	Q'TY E	I.C	Remark
20	T2195-23613	GEAR, 18		1					
21	04611-00720	SNAP RING		1					DIA72

----> Old replace New
<-X-> Not interchangeable
<-O-> Interchangeable with another part(s)
<---- New replace Old
<---> Interchangeable

CK30M-T230A

SPEED SHIFT FORK GROUP

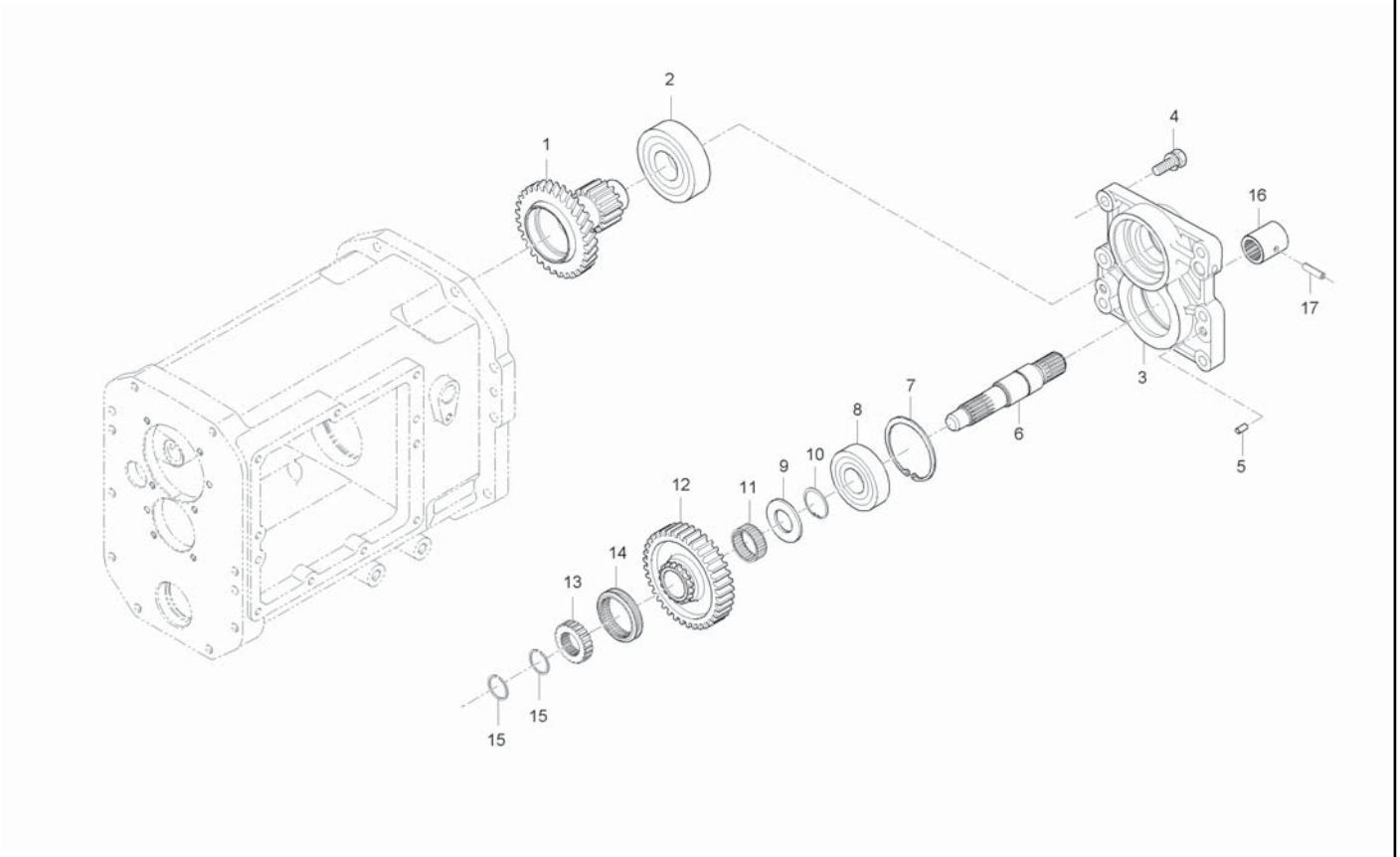

A : CK35-EU , B : CK35H-EU

No.	Part Number	Desciption	Q'TY A	Q'TY B	Q'TY C	Q'TY D	Q'TY E	I.C	Remark
1	T2185-23512	GEAR, 34X15	1						
2	08101-06207	BALL BEARING	1						
3	T2185-23313	BEARING COVER	1						
4	01133-51040	BOLT, WASHER	6						
5	05012-01018	PIN, PARALLEL	2						
6	T2185-23686	SHAFT, SUBMISSION	1						
7	04611-00720	SNAP RING	1						
8	08101-06306	BALL BEARING	1						
9	T2305-21762	COLLAR, THRUST	1						
10	04612-00300	SNAP RING	1						
11	08822-53020	NEEDLE BEARING	1						
12	T2185-23623	GEAR, 37	1						
13	T2185-23672	BOSS, SPLINE	1						
14	T4620-23681	SHIFT	1						
15	T2185-23701	SNAP RING	2						
16	37805-4452-1	COUPLING	1						
17	05411-00636	PIN, SPRING	1						

----> Old replace New
<-X-> Not interchangeable
<-O-> Interchangeable with another part(s)
<---- New replace Old
<---> Interchangeable

CK30H-T240A

PTO DRIVE SHAFT GROUP

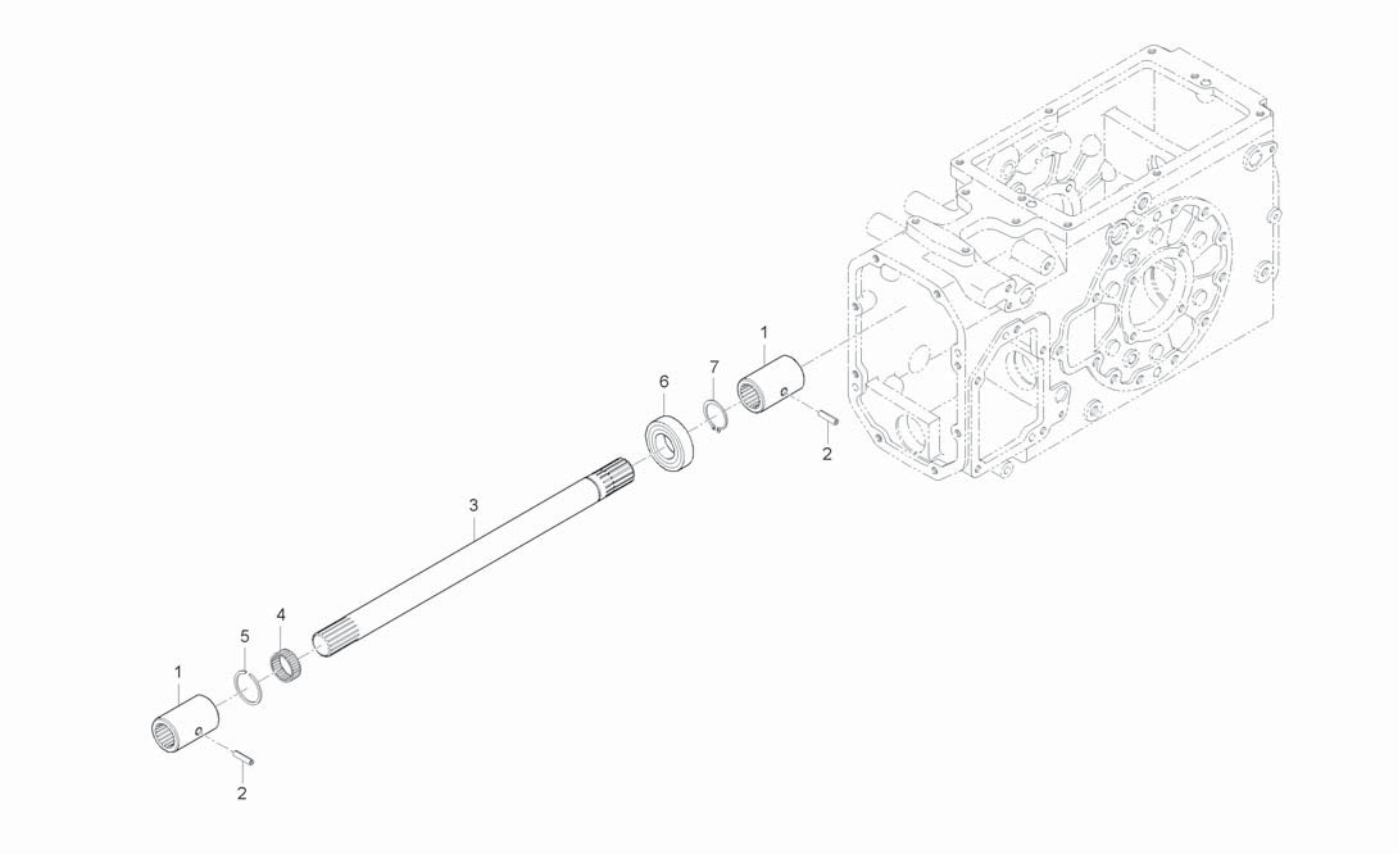

A : CK35-EU , B : CK35H-EU

No.	Part Number	Desciption	Q'TY A	Q'TY B	Q'TY C	Q'TY D	Q'TY E	I.C	Remark
1	T2195-25241	COUPLING		2					
2	05411-00528	PIN, SPRING		2					
3	T2195-25272	SHAFT 1, PTO DRIVE		1					
4	08822-02620	NEEDLE BEARING		1					KT202617
5	T2360-44591	SNAPRING 1, FR WHEEL DRIVE SHAFT		1					
6	08101-06204	BALL BEARING		1					#6204
7	04612-00200	RING, SNAP		1					DIA20

----> Old replace New
<-X-> Not interchangeable
<-O-> Interchangeable with another part(s)
<---- New replace Old
<---> Interchangeable

CK30M-T240A

PTO DRIVE SHAFT GROUP

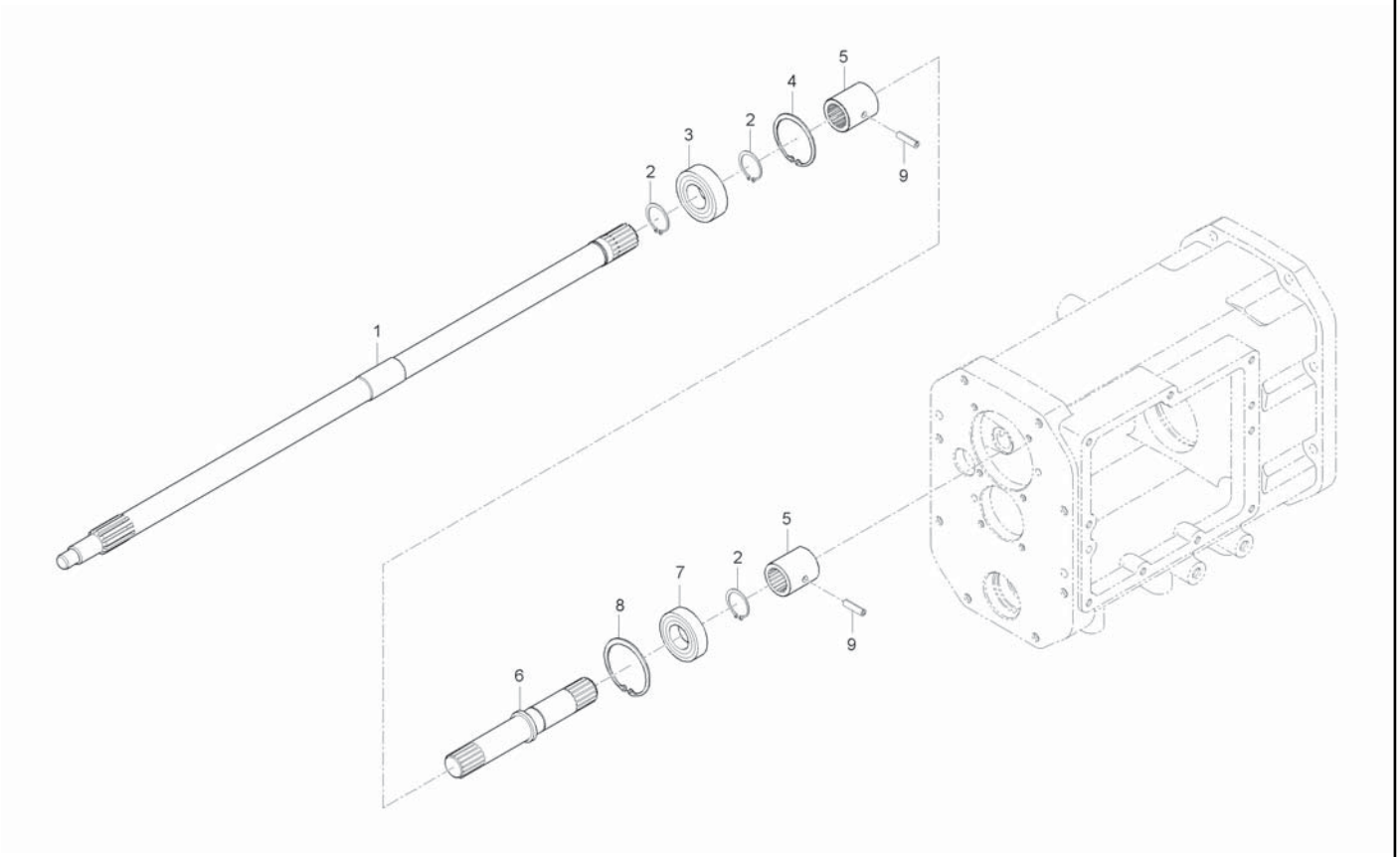

A : CK35-EU , B : CK35H-EU

No.	Part Number	Desciption	Q'TY A	Q'TY B	Q'TY C	Q'TY D	Q'TY E	I.C	Remark
1	T2185-25211	SHAFT 1, PTO DRIVE	1						
2	04612-00250	SNAP RING	3						
3	08101-06205	BALL BEARING	1						
4	04611-00520	SNAP RING	1						
5	37805-4452-1	COUPLING	2						
6	T2185-25221	SHAFT 2, PTO DRIVE	1						
7	08101-06005	BALL BEARING	1						
8	04611-00470	SNAP RING	1						
9	05411-00636	PIN, SPRING	2						

----> Old replace New
<-X-> Not interchangeable
<-O-> Interchangeable with another part(s)

<---- New replace Old
<---> Interchangeable

CK30H-T250A

PTO SHAFT GROUP

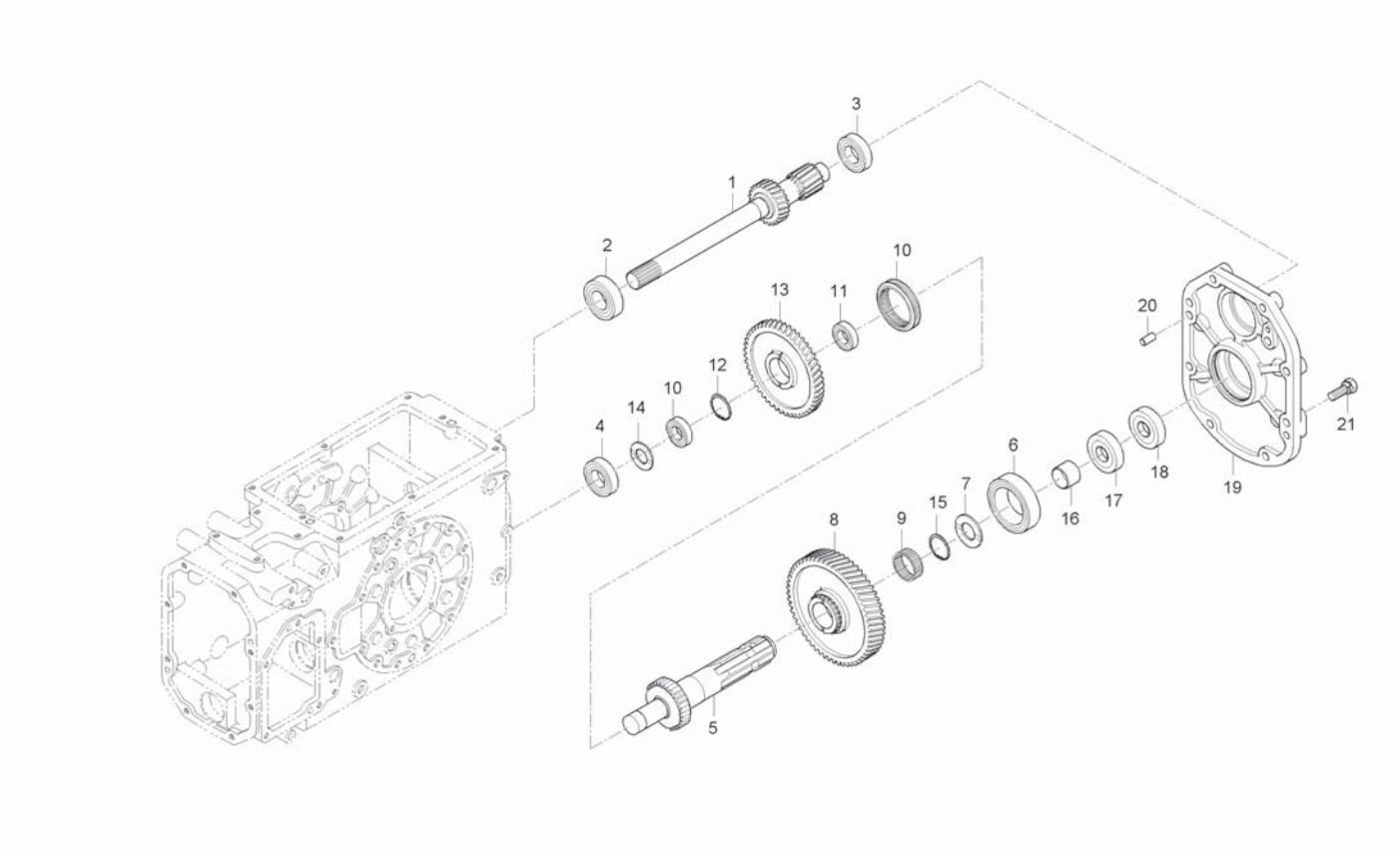

A : CK35-EU , B : CK35H-EU

No.	Part Number	Desciption	Q'TY A	Q'TY B	Q'TY C	Q'TY D	Q'TY E	I.C	Remark
1	T2195-25232	SHAFT, PTO DRIVE		1					
2	08101-06206	BALL BEARING		1					#6206
3	08101-06305	BALL BEARING		1					DIA25
4	08151-06305	BALL BEARING		1					#6305NR
5	T2185-25315	SHAFT, PTO		1					
6	08101-06207	BALL BEARING		1					#6207
7	T4620-21521	COLLAR, THRUST		1					
8	T2185-25122	GEAR, 56		1					
9	08824-04527	NEEDLE BEARING		1					
10	T2185-21981	SHIFT		1					
11	08101-06205	BALL BEARING		2					DIA25
12	04611-00520	SNAP RING		1					
13	T2185-25142	GEAR, 48		1					
14	34150-2156-1	COLLAR		1					
15	C7910-95382	SNAP RING		1					
16	T4620-25383	SLEEVE		1					
17	T4620-25452	SEAL, OIL		1					
18	T4620-25442	SEAL, OIL		1					
19	T2185-25414	CASE, PTO BEARING		1					

----> Old replace New
<-X-> Not interchangeable
<-O-> Interchangeable with another part(s)
<---- New replace Old
<---> Interchangeable

CK30H-T250A

PTO SHAFT GROUP

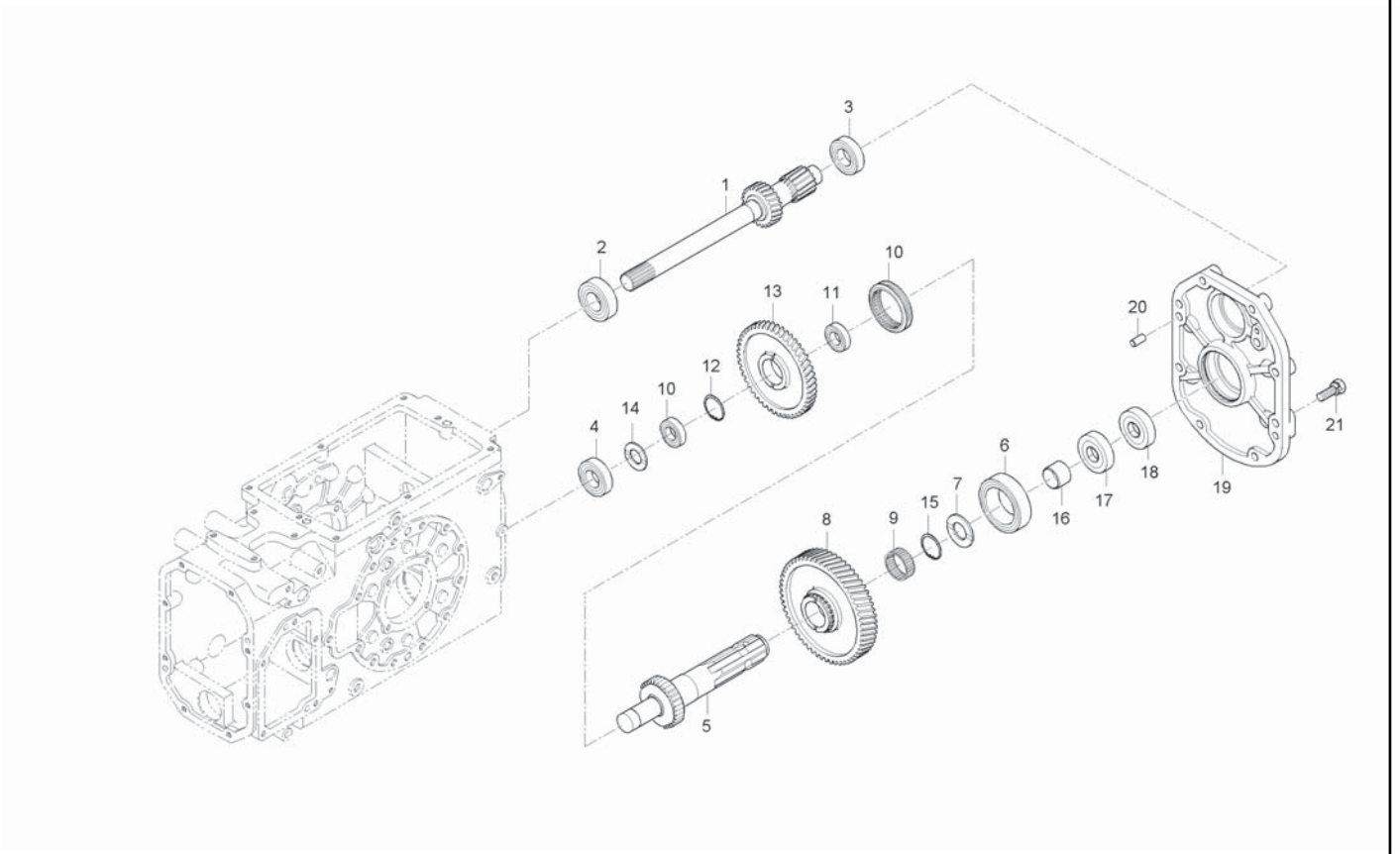

A : CK35-EU , B : CK35H-EU

No.	Part Number	Desciption	Q'TY A	Q'TY B	Q'TY C	Q'TY D	Q'TY E	I.C	Remark
20	05012-01018	PIN, PARALLEL		2					
21	01133-51045	BOLT, WASHER		8					
22	38450-2197-1	BOSS, SPLINE		1					
23	T2350-25361	NUT, 24		1					
24	T2185-25461	PACKING		1					

----> Old replace New
<-X-> Not interchangeable
<-O-> Interchangeable with another part(s)
<---- New replace Old
<---> Interchangeable

CK30M-T250A

PTO SHAFT GROUP

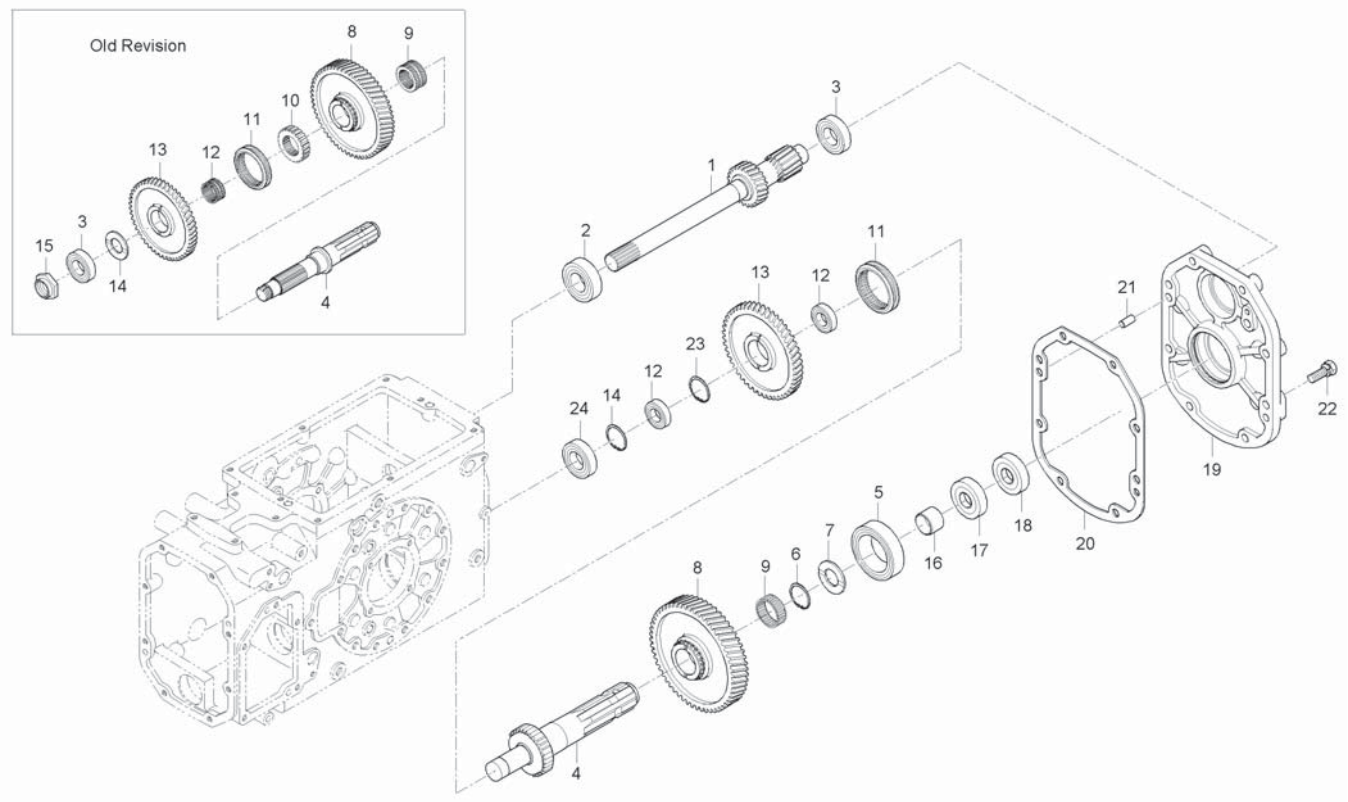

A : CK35-EU , B : CK35H-EU

No.	Part Number	Desciption	Q'TY A	Q'TY B	Q'TY C	Q'TY D	Q'TY E	I.C	Remark
1	T2185-25231	SHAFT, PTO DRIVE	1						
2	08101-06205	BALL BEARING	1						
3	08101-06305	BALL BEARING	1						
4	T2185-25311	SHAFT, PTO	1						
4	T2185-25312	SHAFT, PTO	1					<-X->	
4	T2185-25313	SHAFT, PTO	1					<-X->	
4	T2185-25314	SHAFT, PTO	1					---->	
5	08101-06207	BALL BEARING	1						
6	04611-00720	SNAP RING	1						
7	T2185-25161	COLLAR, THRUST	1						
7	T2440-21681	COLLAR, THRUST	1					<----	
7	T4620-21521	COLLAR, THRUST	1					<-X->	
8	T2185-25121	GEAR, 56	1						
8	T2185-25122	GEAR, 56	1					<-X->	
9	T2440-25131	RING, IN	1						
9	08824-04527	NEEDLE BEARING	1					<-X->	
10	38450-2197-1	BOSS, SPLINE	1						
11	T2440-21981	SHIFT	1						
11	T2185-21981	SHIFT	1					<-X->	

----> Old replace New
<-X-> Not interchangeable
<-O-> Interchangeable with another part(s)
<---- New replace Old
<---> Interchangeable

CK30M-T250A

PTO SHAFT GROUP

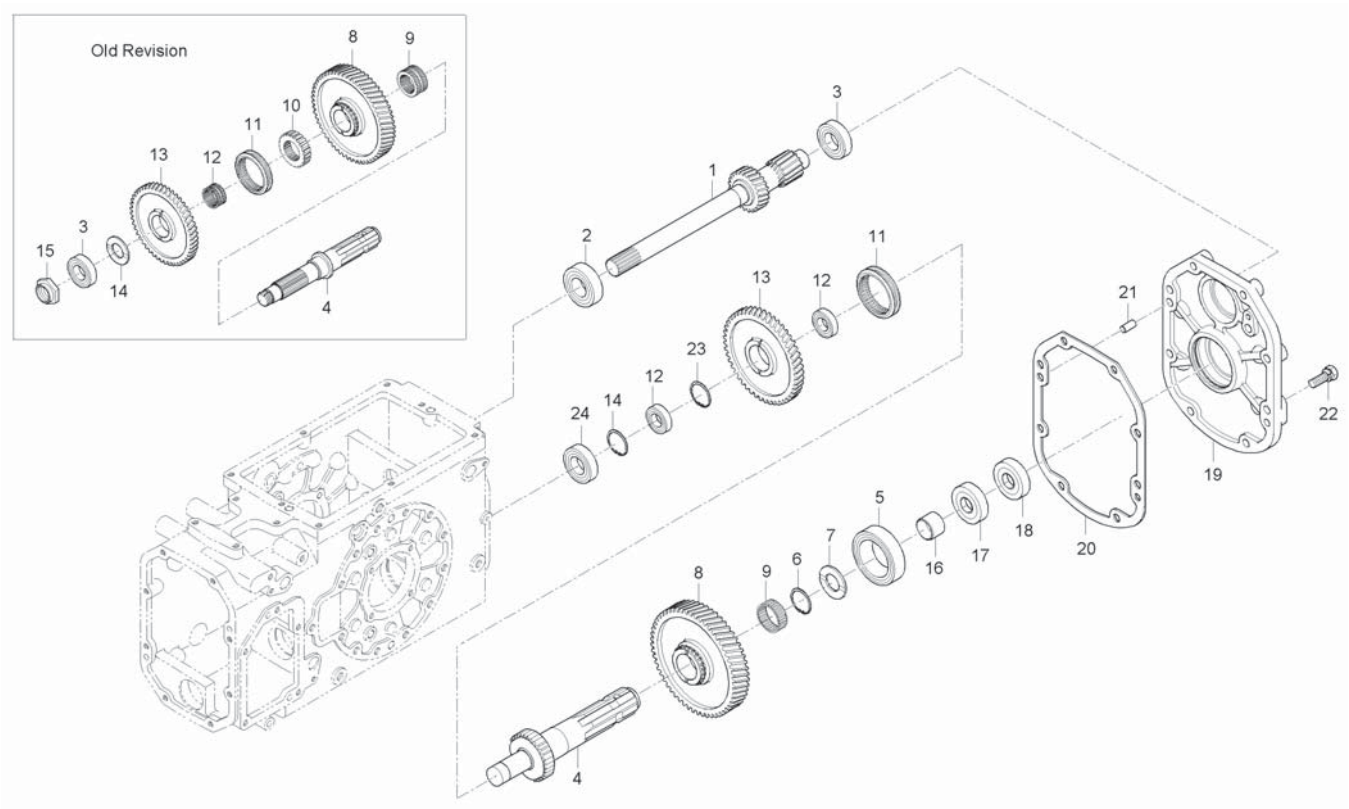

A : CK35-EU , B : CK35H-EU

No.	Part Number	Desciption	Q'TY A	Q'TY B	Q'TY C	Q'TY D	Q'TY E	I.C	Remark
12	T2440-21901	RING, IN	1						
12	08101-06205	BALL BEARING	2					<-X->	
13	T2185-25141	GEAR, 48	1						
13	T2185-25142	GEAR, 48	1					<-X->	
14	T2305-21761	COLLAR, THRUST	1						
14	T2305-21762	COLLAR, THRUST	1					<----	
14	34150-2156-1	COLLAR	1					<-X->	
14	C7910-95382	SNAP RING	1					<-X->	
15	T2350-25361	NUT, 24	1						
16	T4620-25383	SLEEVE	1						
17	T4620-25452	SEAL, OIL	1						
18	T4620-25442	SEAL, OIL	1						
19	T2185-25411	CASE, PTO BEARING	1						
19	T2185-25412	CASE, PTO BEARING	1					<----	
19	T2185-25413	CASE, PTO BEARING	1					<-X->	
19	T2185-25414	CASE, PTO BEARING	1					<-X->	
20	T2185-25461	PACKING	1						
21	05012-01018	PIN, PARALLEL	2						
22	01133-51045	BOLT, WASHER	8						

----> Old replace New
<-X-> Not interchangeable
<-O-> Interchangeable with another part(s)
<---- New replace Old
<---> Interchangeable

CK30M-T250A

PTO SHAFT GROUP

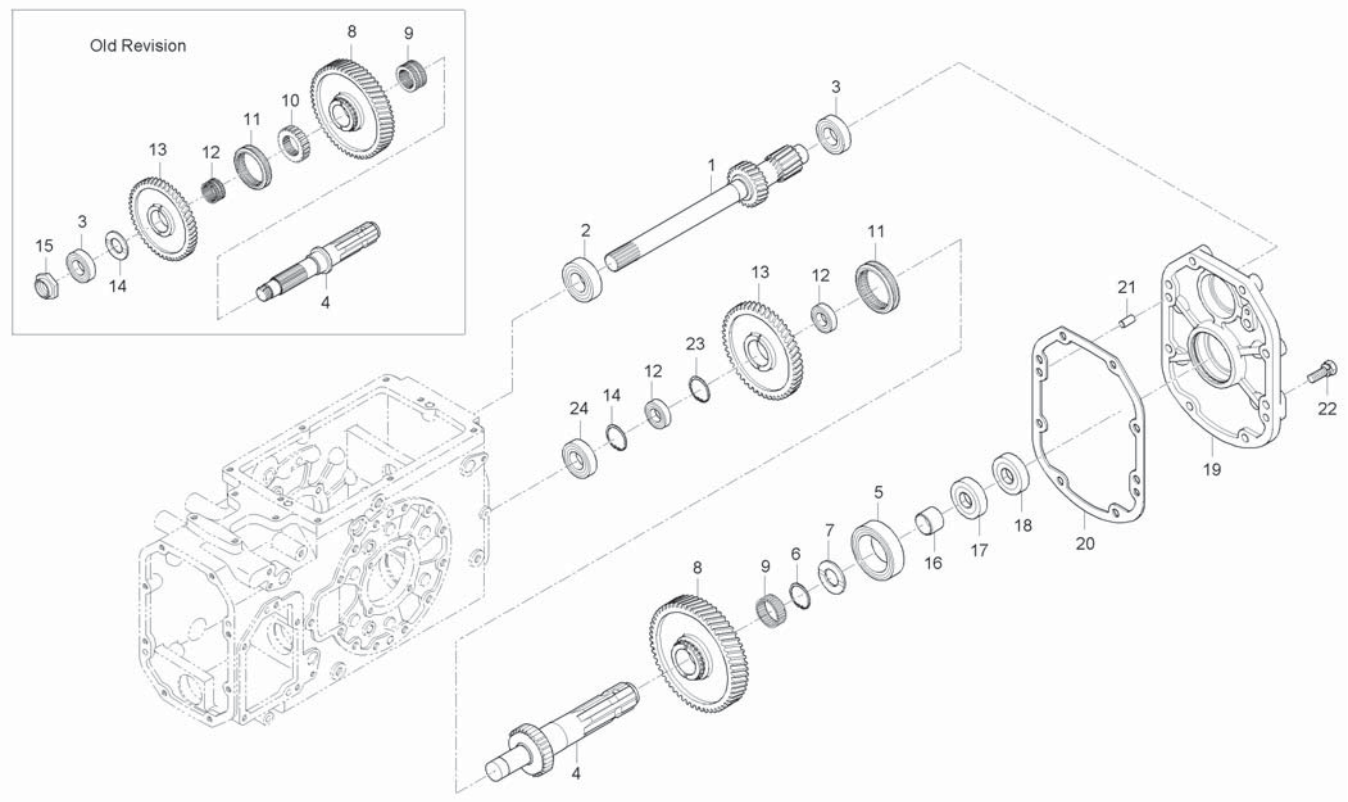

A : CK35-EU , B : CK35H-EU

No.	Part Number	Desciption	Q'TY A	Q'TY B	Q'TY C	Q'TY D	Q'TY E	I.C	Remark
23	04611-00520	SNAP RING	1						
24	08151-06305	BALL BEARING	1						

----> Old replace New
<-X-> Not interchangeable
<-O-> Interchangeable with another part(s)
<---- New replace Old
<---> Interchangeable

CK30M-T260A

MID PTO SHAFT GROUP

(CK35-EU : ~ GT8100084, CK35H-EU : ~ GT8900058)

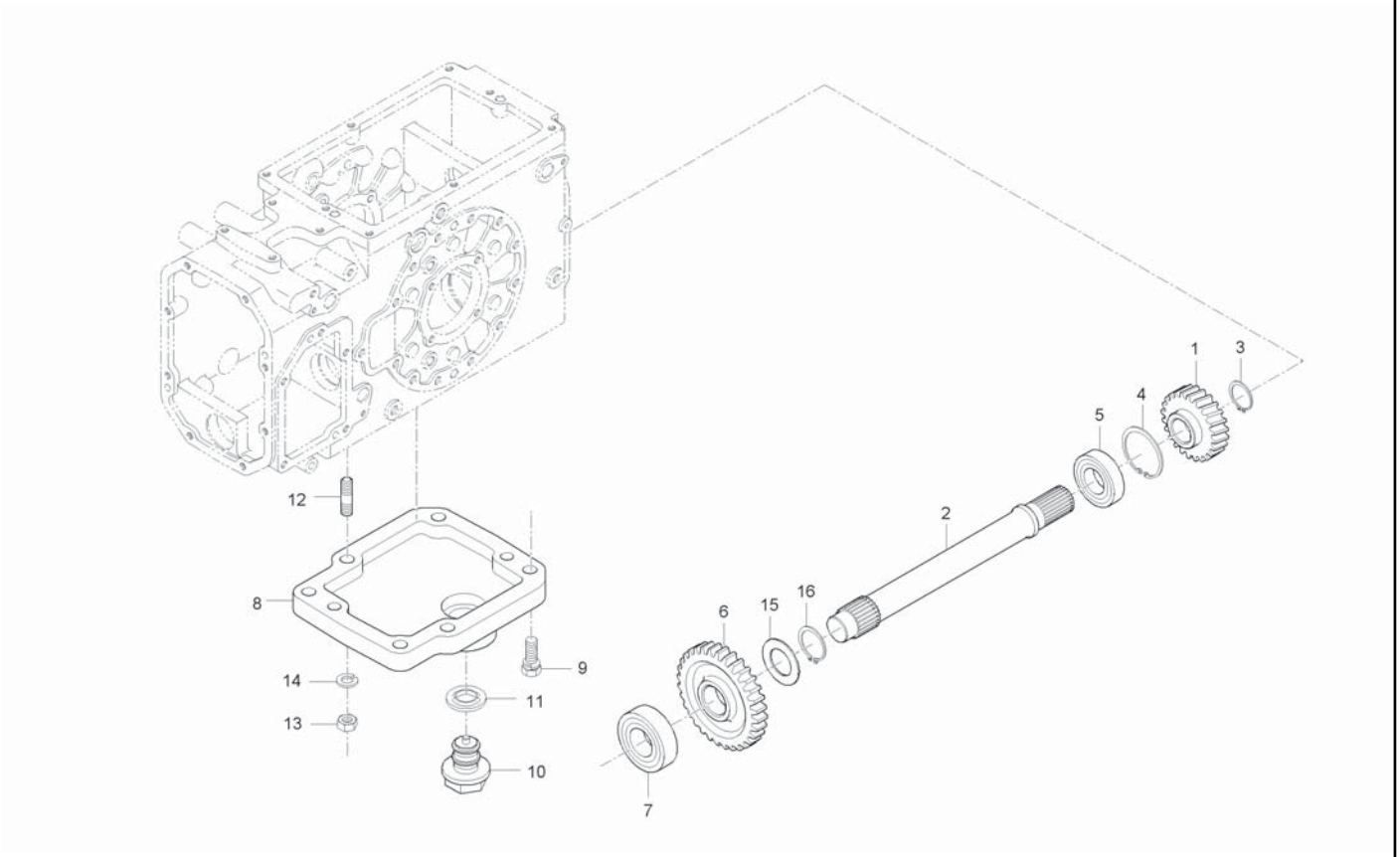

A : CK35-EU , B : CK35H-EU

No.	Part Number	Desciption	Q'TY A	Q'TY B	Q'TY C	Q'TY D	Q'TY E	I.C	Remark
1	T2185-24131	GEAR, 23 MID PTO	1	1					
2	T2185-24141	SHAFT, COUNTER MID PTO	1	1					
3	04612-00250	SNAP RING	1	1					
4	04611-00620	RING, STOPPER	1	1					
5	08101-06305	BALL BEARING	1	1					DIA25
6	T2185-24151	GEAR, 31 MID PTO	1 ~GT8100064	1 ~GT8900058					
6	T2185-24152	GEAR, 31 MID PTO	1 GT8100065~	1 GT8900059~				<-O->	
7	08101-06205	BALL BEARING	1 ~GT8100064	1 ~GT8900058					DIA25
7	08101-06006	BALL BEARING	1 GT8100065~	1 GT8900059~				<-O->	#6006
8	T2185-24174	COVER MID PTO	1	1					
9	01133-51035	BOLT, WASHER	4	4					M10X1.25
10	T4260-14271	PLUG, MAGNET	1						
10	T4125-14261	PLUG, MAGNET	1	1				<--->	
11	04717-02650	WASHER, SEAL	1	1					
12	01517-51030	STUD	2	2					
13	02176-50100	NUT	2	2					M10X1.25
14	04512-50100	WASHER, SPRING	2	2					M10
15	04612-00300	SNAP RING	1	1					
16	38455-2314-1	WASHER	1	1					

----> Old replace New
<-X-> Not interchangeable
<-O-> Interchangeable with another part(s)
<---- New replace Old
<---> Interchangeable

CK30M-T265B

COVER GROUP

(CK35-EU : GT8100085 ~ , CK35H-EU : GT8900059 ~)

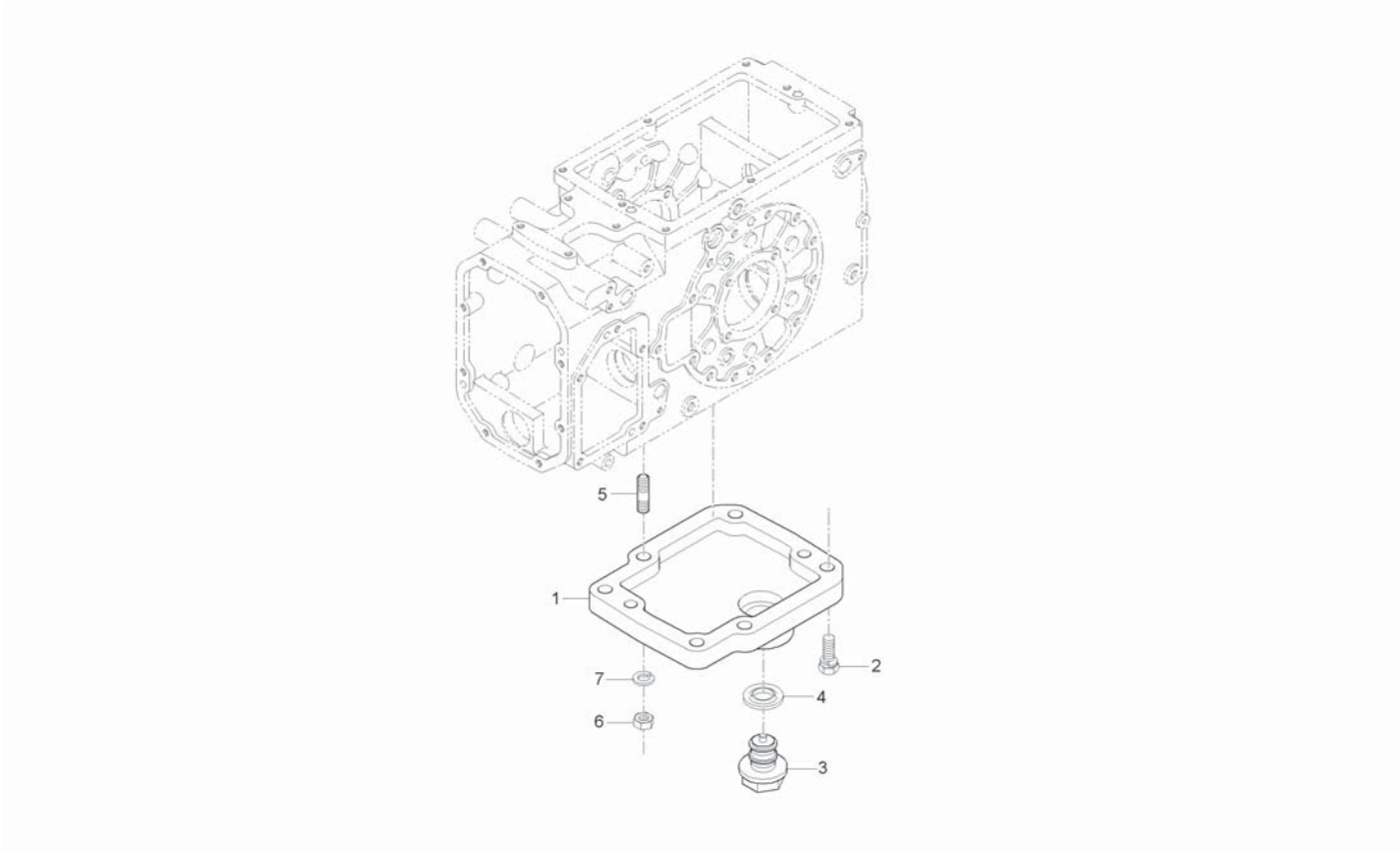

A : CK35-EU , B : CK35H-EU

No.	Part Number	Desciption	Q'TY A	Q'TY B	Q'TY C	Q'TY D	Q'TY E	I.C	Remark
1	T2185-24174	COVER MID PTO	1	1					
2	01133-51035	BOLT, WASHER	4	4					M10X1.25
3	T4125-14261	PLUG, MAGNET	1	1					
4	04717-02650	WASHER, SEAL	1	1					
5	01517-51030	STUD	2	2					
6	02176-50100	NUT	2	2					M10X1.25
7	04512-50100	WASHER, SPRING	2	2					M10

----> Old replace New
<-X-> Not interchangeable
<-O-> Interchangeable with another part(s)
<---- New replace Old
<---> Interchangeable

CK30H-T270A

SPRIAL BEVEL GEAR GROUP

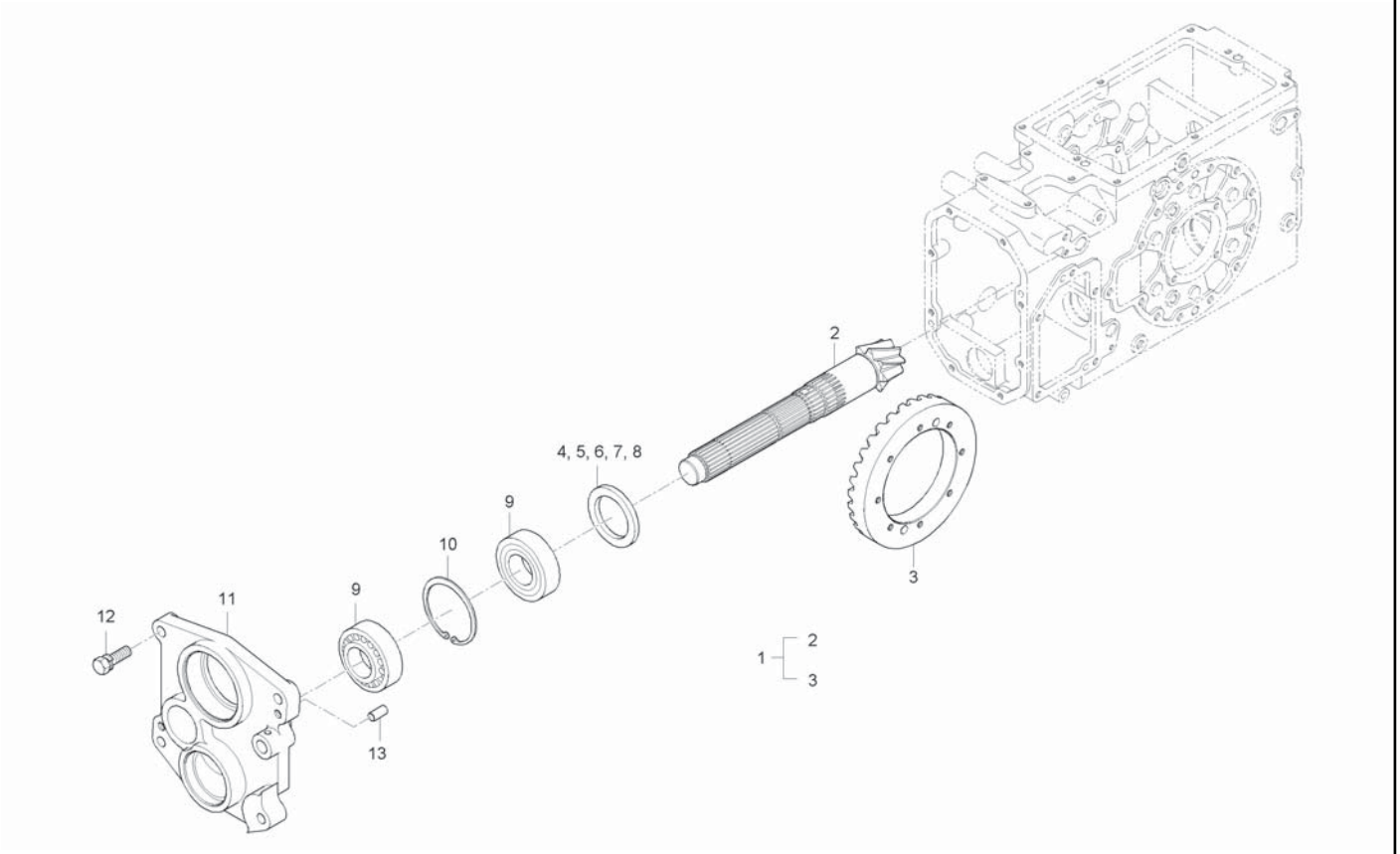

A : CK35-EU , B : CK35H-EU

No.	Part Number	Desciption	Q'TY A	Q'TY B	Q'TY C	Q'TY D	Q'TY E	I.C	Remark
1	T2195-26111	SPIRAL BEVEL GEAR ASSY		1					
2	T2195-22111	PINON, SPIRAL BEVEL		1					
3	T2185-26121	BEVEL GEAR 35, SPIRAL		1					
4	T2195-22052	COLLAR 1.6T, ADJUSTING		1					
5	T2195-22062	COLLAR 1.8T, ADJUSTING		1					
6	T2195-22072	COLLAR 2.0T, ADJUSTING		1					
7	T2195-22082	COLLAR 2.2T, ADJUSTING		1					
8	T2195-22092	COLLAR 2.4T, ADJUSTING		1					
9	38630-4329-2	BEARING, TAPER ROLLER		2					
10	04611-00720	SNAP RING		1					DIA72
11	T2195-21123	BEARING COVER		1					
12	01133-51035	BOLT, WASHER		4					M10X1.25
13	05012-01018	PIN, PARALLEL		2					

----> Old replace New
<-X-> Not interchangeable
<-O-> Interchangeable with another part(s)
<---- New replace Old
<---> Interchangeable

CK30M-T270A

SPRIAL BEVEL GEAR GROUP

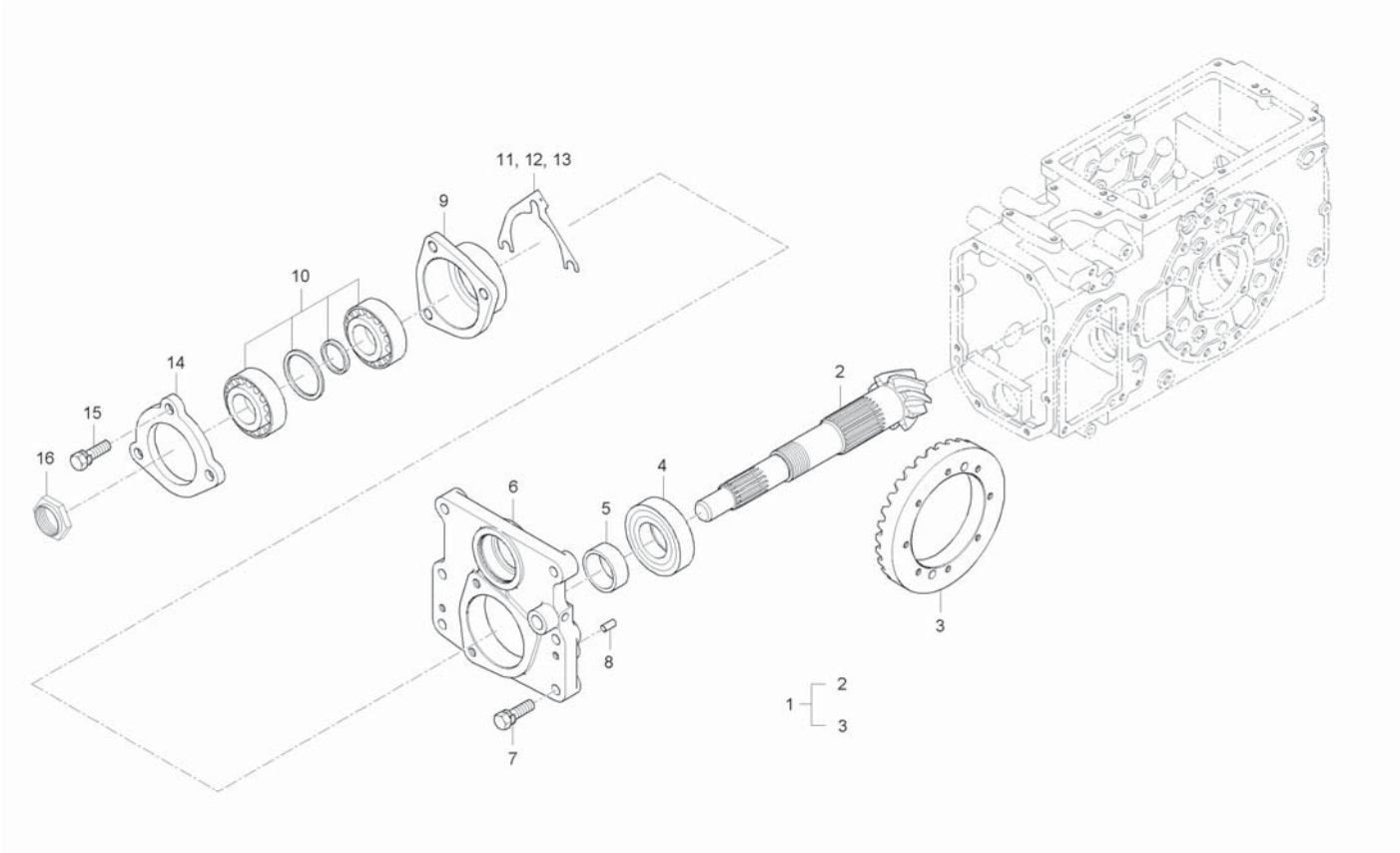

A : CK35-EU , B : CK35H-EU

No.	Part Number	Desciption	Q'TY A	Q'TY B	Q'TY C	Q'TY D	Q'TY E	I.C	Remark
1	T2185-26111	SPIRAL BEVEL GEAR ASSY	1						
2	T2185-22111	PINON, SPIRAL BEVEL	1						
3	T2185-26121	BEVEL GEAR 35, SPIRAL	1						
4	T2610-23811	BEARING, ROLLER	1						
5	T2185-44551	SPACER	1						
6	T2185-21122	BEARING COVER	1						
7	01133-51040	BOLT, WASHER	6						
8	05012-01018	PIN, PARALLEL	2						
9	T2185-23823	CASE, BEARING	1						
10	T2185-22141	BEARING, TAPER ROLLER	1						
11	T2610-23831	SHIM, 0.1	2						
12	T2610-23841	SHIM, 0.2	2						
13	T2610-23851	SHIM, 0.5	2						
14	T2185-23882	BEARING COVER	1						
15	01133-51040	BOLT, WASHER	3						
16	T2185-22341	NUT, 30	1						

----> Old replace New
<-X-> Not interchangeable
<-O-> Interchangeable with another part(s)
<---- New replace Old
<---> Interchangeable

CK30H-T280A

FRONT DRIVING GEAR GROUP

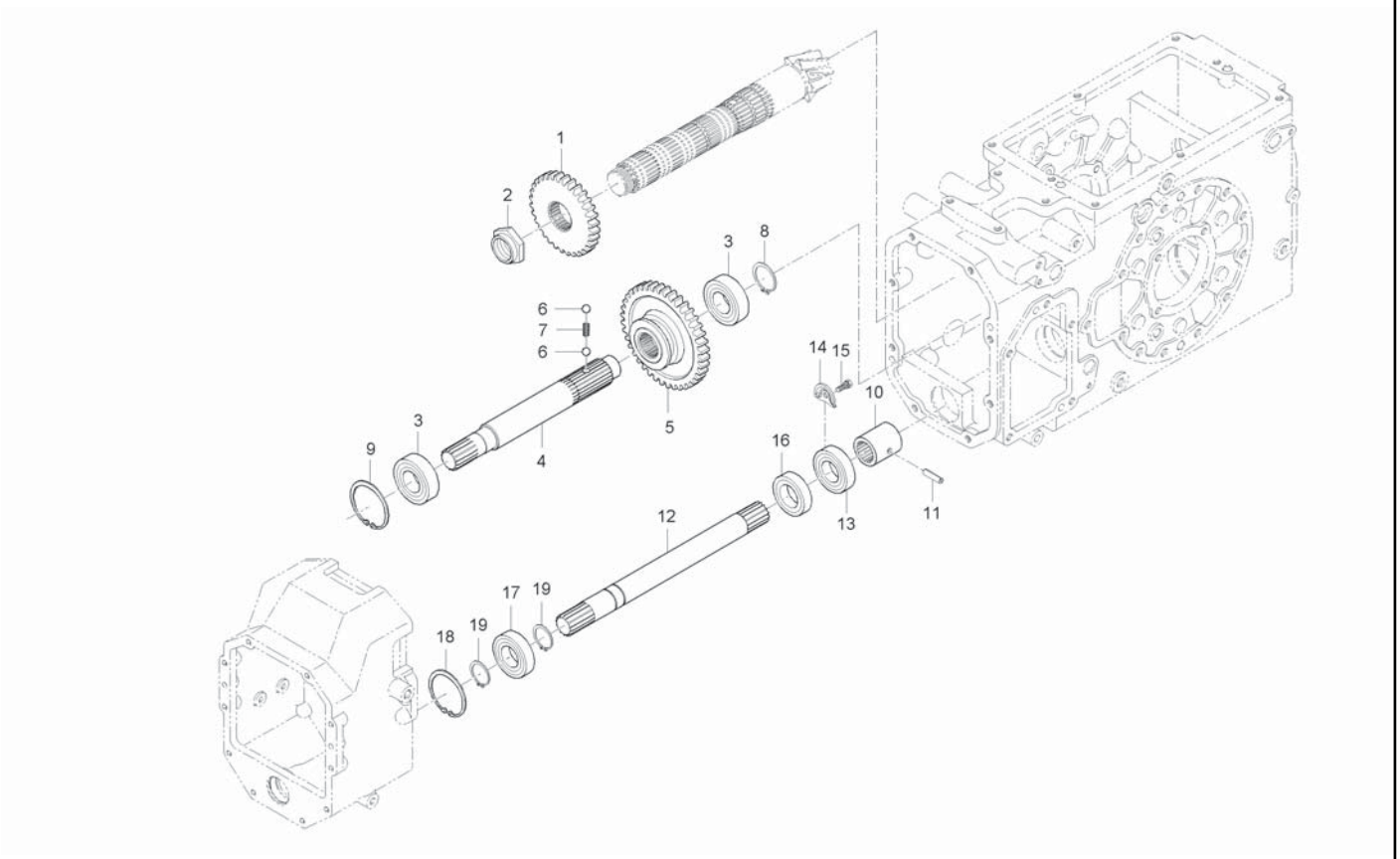

A : CK35-EU , B : CK35H-EU

No.	Part Number	Desciption	Q'TY A	Q'TY B	Q'TY C	Q'TY D	Q'TY E	I.C	Remark
1	T2195-44531	GEAR, 30		1					
2	T4810-21621	NUT, 32		1					
3	08101-06205	BALL BEARING		2					DIA25
4	T2195-44563	SHAFT 1, FRONT DRIVE		1					
5	T2185-44612	GEAR, 39		1					
6	07715-01605	STEEL BALL		2					5/16"
7	T2440-44251	SPRING		1					
8	04612-00300	SNAP RING		2					
9	04611-00520	SNAP RING		1					
10	T4620-44592	COUPLING		1					
11	05411-00636	PIN, SPRING		1					
12	T2195-44572	SHAFT 2, FRONT DRIVE		1					
13	08101-06005	BALL BEARING		1					#6005
14	34150-2194-2	BEARING, RETAINER		1					
15	01123-50818	BOLT, WASHER		1					M8*P1.25
16	09500-25408	SEAL, OIL		1					TC25*40*8
17	08141-06005	BALL BEARING		1					#6005DD
18	04611-00470	SNAP RING		1					
19	04612-00250	SNAP RING		2					

----> Old replace New
<-X-> Not interchangeable
<-O-> Interchangeable with another part(s)
<---- New replace Old
<---> Interchangeable

CK30M-T280A

FRONT DRIVING GEAR GROUP

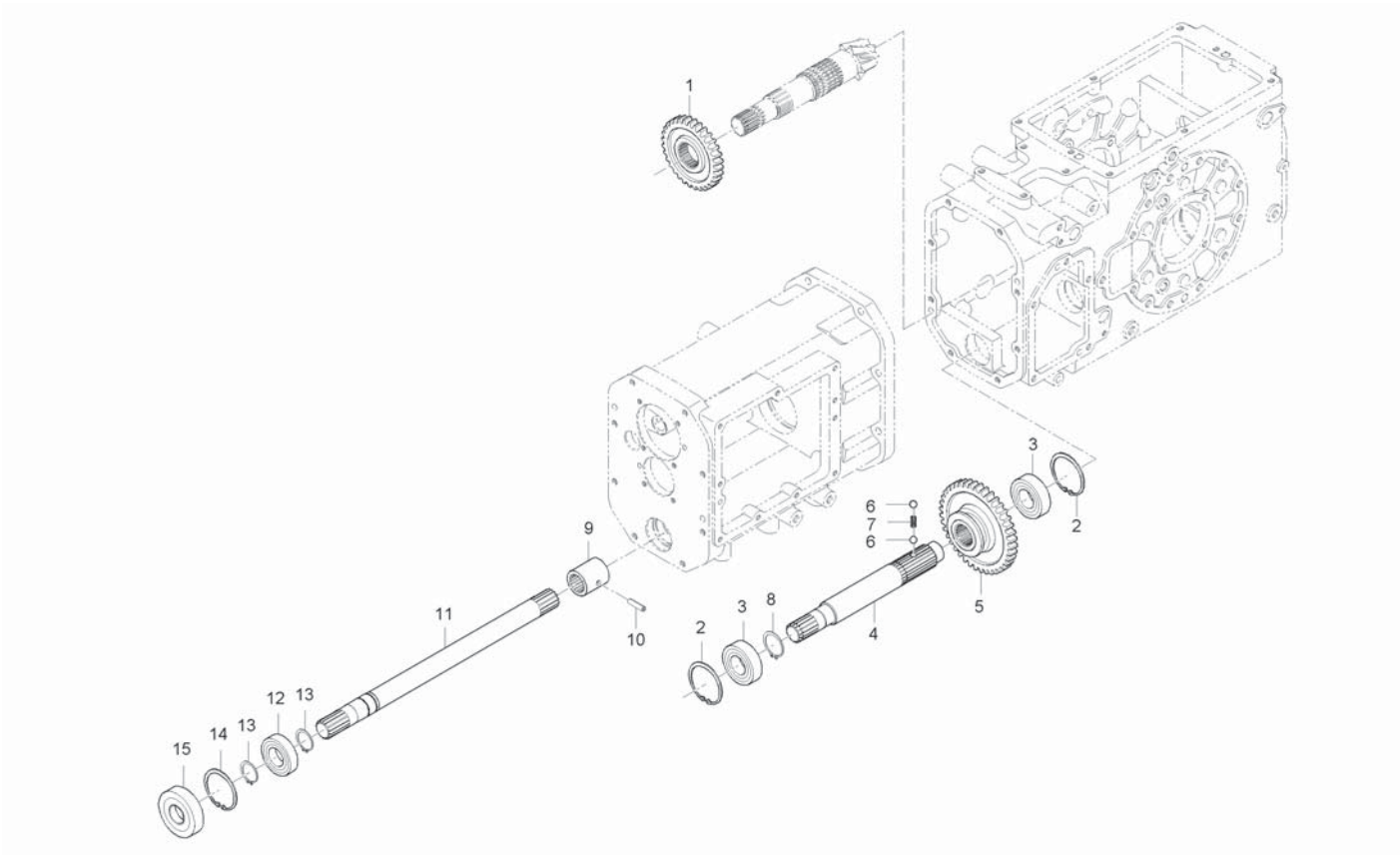

A : CK35-EU , B : CK35H-EU

No.	Part Number	Desciption	Q'TY A	Q'TY B	Q'TY C	Q'TY D	Q'TY E	I.C	Remark
1	T2185-44531	GEAR, 30	1						
2	04611-00520	SNAP RING	1						
3	08101-06205	BALL BEARING	2						
4	T2185-44562	SHAFT 1, FRONT DRIVE	1						
5	T2185-44612	GEAR, 39	1						
6	07715-01605	STEEL BALL	2						
7	T2440-44251	SPRING	1						
8	04612-00300	SNAP RING	1						
9	T4620-44592	COUPLING	1						
10	05411-00636	PIN, SPRING	1						
11	T2185-44571	SHAFT 2, FRONT DRIVE	1						
11	T2185-44572	SHAFT 2, FRONT DRIVE	1					<-0->	
12	08101-06005	BALL BEARING	1						
13	04612-00250	SNAP RING	2						
13	04612-00250	SNAP RING	1					<-0->	
14	04611-00470	SNAP RING	1						
15	09502-55210	OIL SEAL	1						

----> Old replace New
<-X-> Not interchangeable
<-0-> Interchangeable with another part(s)
<---- New replace Old
<---> Interchangeable

CK30M-T290A

SHUTTLE FORK GROUP

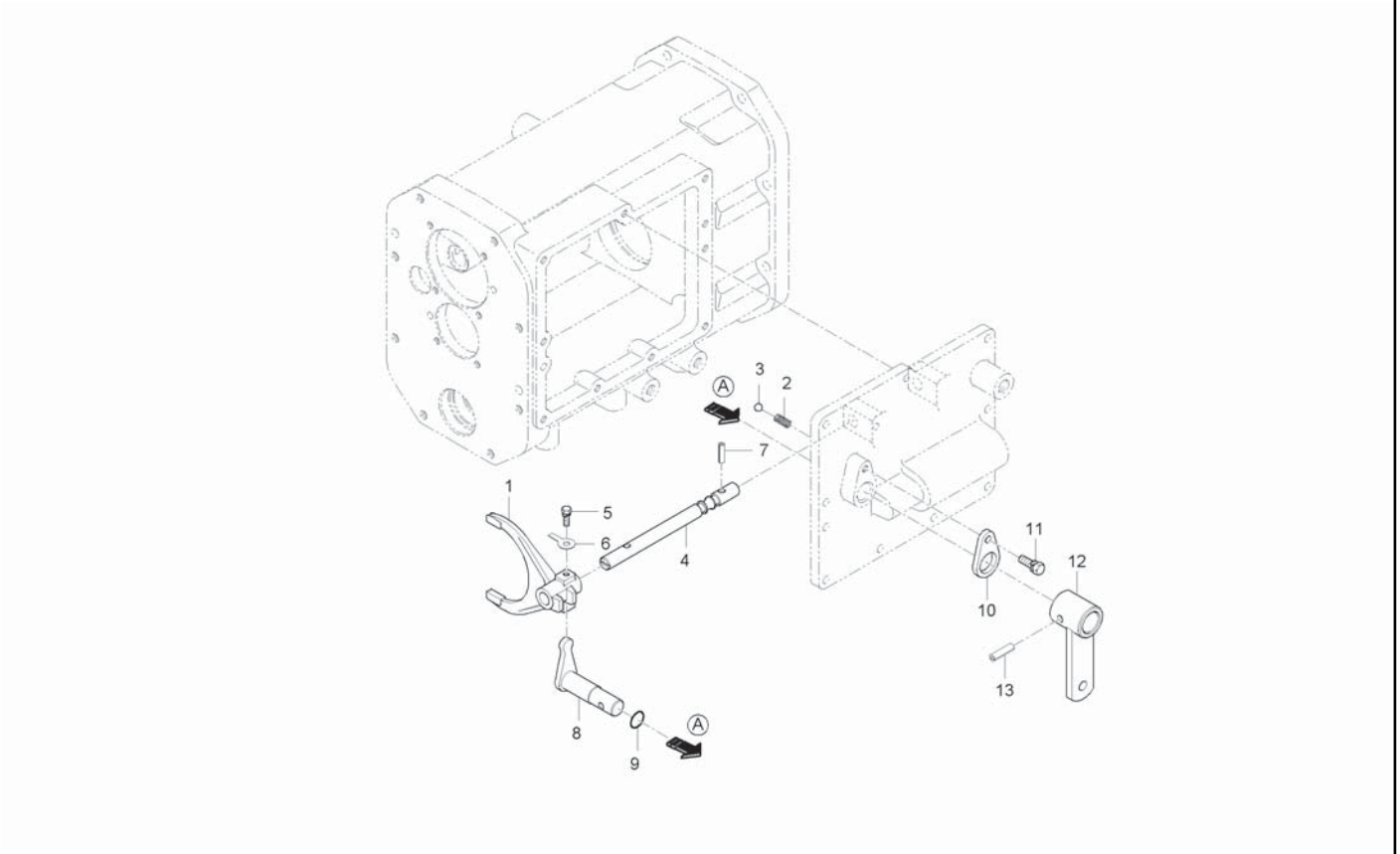

A : CK35-EU , B : CK35H-EU

No.	Part Number	Desciption	Q'TY A	Q'TY B	Q'TY C	Q'TY D	Q'TY E	I.C	Remark
1	T2185-22151	FORK, SHUTTLE SHIFT	1						
2	62331-1853-2	SPRING	1						
3	07715-01605	STEEL BALL	1						
4	T2185-22162	ROD, FORK SHUTTLE	1						
5	T2610-22171	BOLT, CLAMPING	1						
6	04111-50060	WASHER	1						
7	05411-00620	PIN, SPRING	1						
8	T2185-22171	ARM, SHUTTEL SHIFT	1						
9	04811-00160	O RING	1						
10	T4620-44331	STOPPER	1						
11	01123-50816	BOLT, WASHER	1						
12	T2185-22192	LEVER 1, SHUTTLE	1						
13	05411-00630	PIN, SPRING	1						

----> Old replace New
<-X-> Not interchangeable
<-O-> Interchangeable with another part(s)
<---- New replace Old
<---> Interchangeable

CK30M-T310A

MAIN SHIFT FORK GROUP

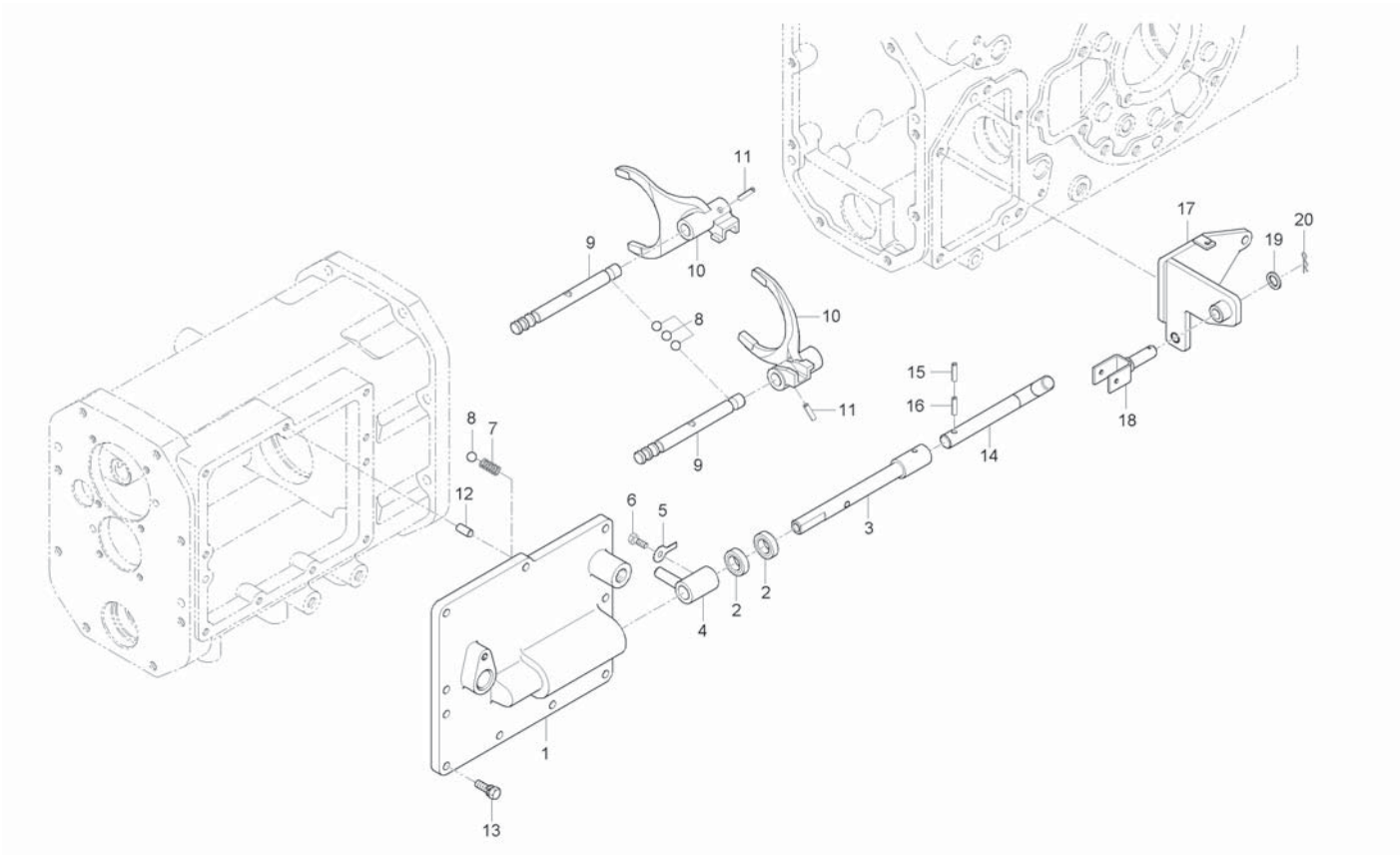

A : CK35-EU , B : CK35H-EU

No.	Part Number	Desciption	Q'TY A	Q'TY B	Q'TY C	Q'TY D	Q'TY E	I.C	Remark
1	T2185-21215	COVER, MAIN TRANSMISSION	1						
2	09500-16287	SEAL, OIL	2						
3	T2185-21365	ROD, MAIN SHIFT	1 ~GT8100129						
3	T2185-21366	ROD, MAIN SHIFT	1 HT8100001~					<-0->	
4	T2185-21351	ARM, SHIFT	1						
5	04111-50060	WASHER	1						
6	T4620-21371	BOLT, CLAMPING	1						
7	62331-1853-2	SPRING	2						
8	07715-01605	STEEL BALL	5						
9	T2185-21261	ROD, FORK SUPER LOW SPEED	2						
10	T2185-21243	FORK, MAIN TRANSMISSION 1X2	2						
11	05411-00625	PIN, SPRING	2						
12	05012-00818	PIN, PARALLEL	2						
13	01123-50830	BOLT, WASHER	9						
14	T2185-21375	ROD 2, MAIN TRANMISSION	1						
15	05411-00325	PIN, SPRING	1						
16	05411-00525	PIN, SPRING	1						
17	T2181-21322	BRACKET, MAIN TRANSMISSION	1						
18	T2350-21332	PIN, MAIN TRANSMISSION	1						

----> Old replace New
<-X-> Not interchangeable
<-0-> Interchangeable with another part(s)
<---- New replace Old
<---> Interchangeable

CK30M-T310A

MAIN SHIFT FORK GROUP

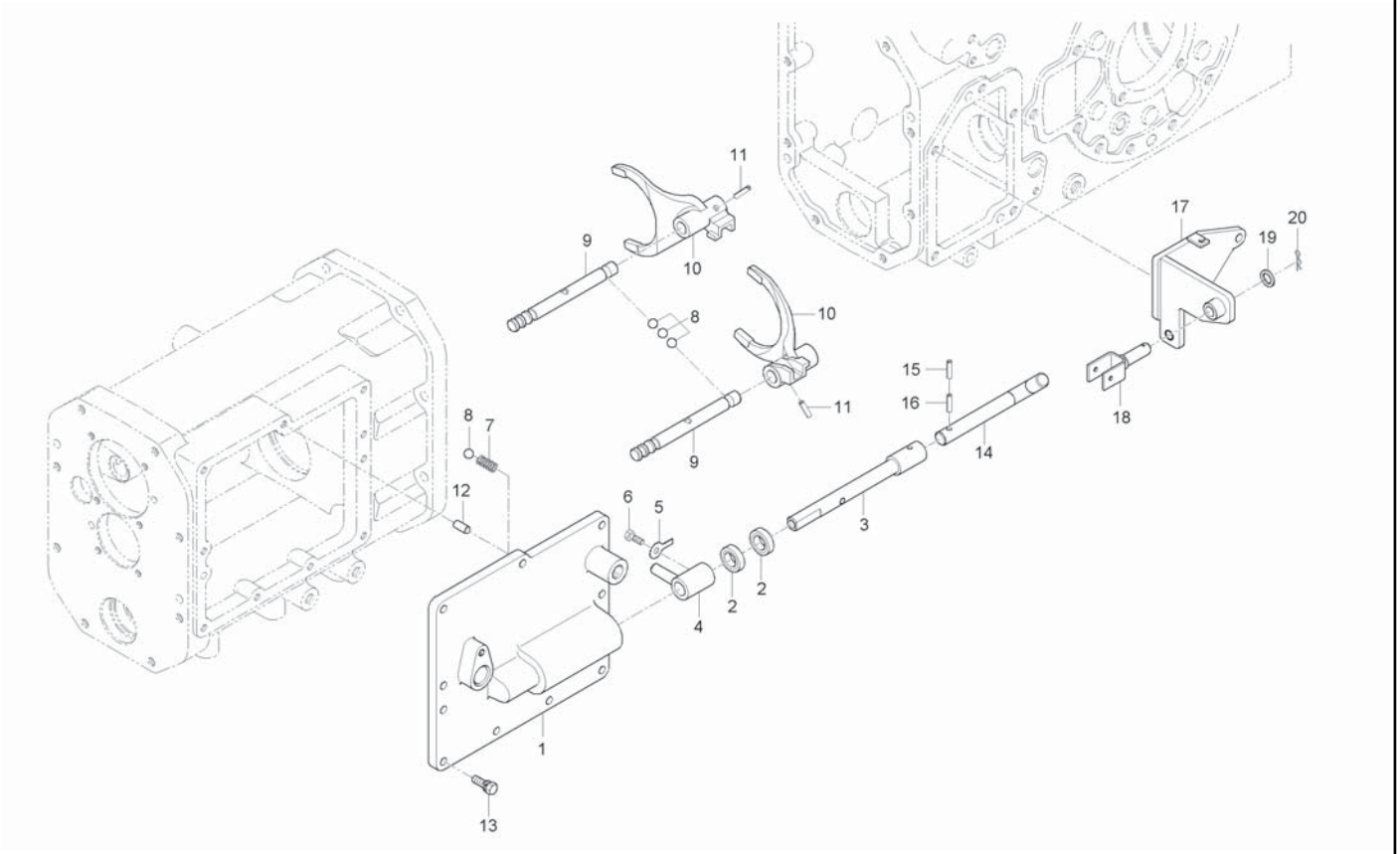

A : CK35-EU , B : CK35H-EU

No.	Part Number	Desciption	Q'TY A	Q'TY B	Q'TY C	Q'TY D	Q'TY E	I.C	Remark
19	04011-50140	WASHER, PLAIN	1						
20	05515-51600	PIN, SNAP	1						

----> Old replace New
<-X-> Not interchangeable
<-O-> Interchangeable with another part(s)
<---- New replace Old
<---> Interchangeable

CK30H-T330A

SPEED SHIFT FORK GROUP

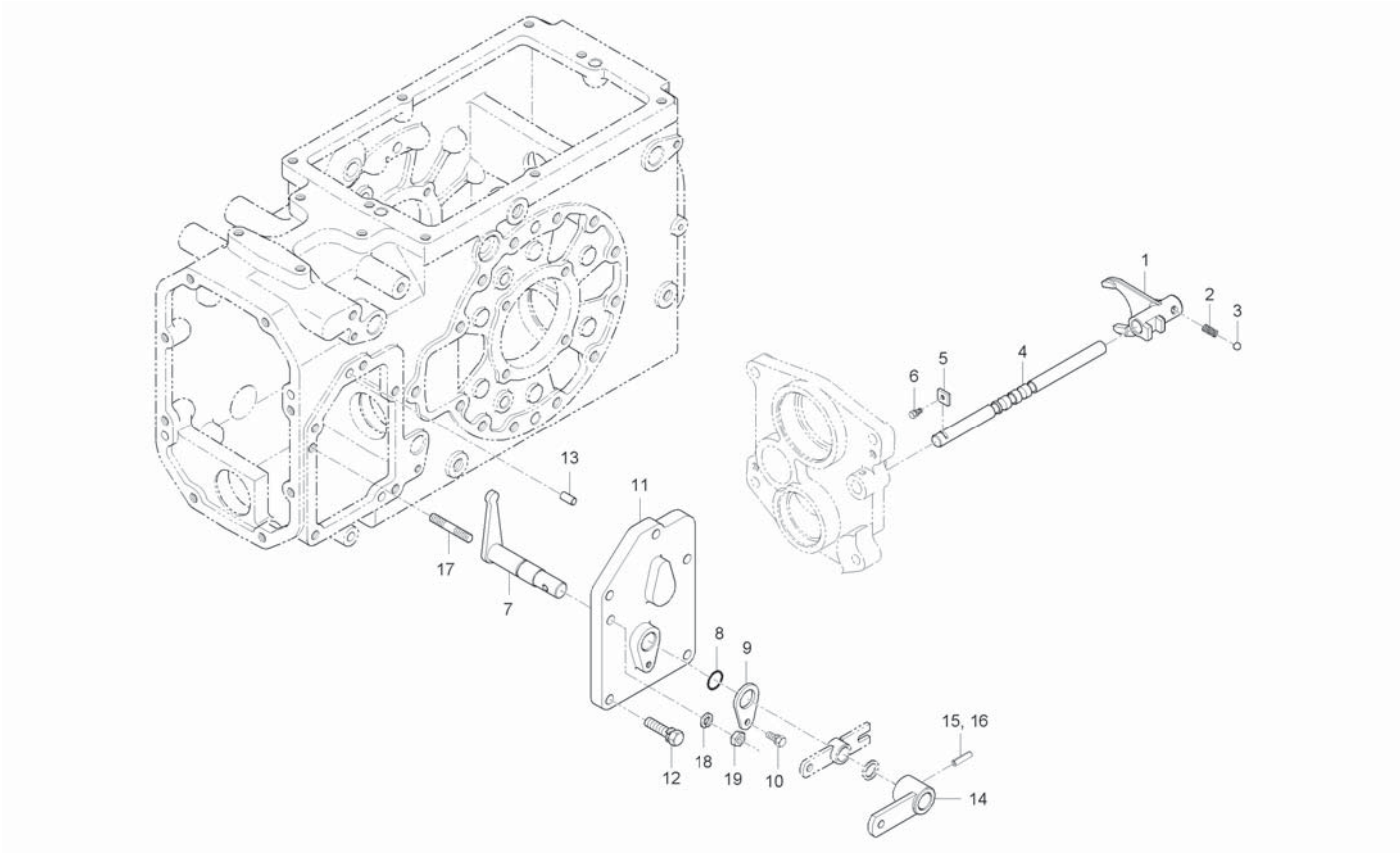

A : CK35-EU , B : CK35H-EU

No.	Part Number	Desciption	Q'TY A	Q'TY B	Q'TY C	Q'TY D	Q'TY E	I.C	Remark
1	T2195-23113	FORK, SUBMISSION		1					
2	62331-1853-2	SPRING		1					
3	07715-01605	STEEL BALL		1					5/16"
4	T2195-23122	ROD, FORK SUB SHIFT		1					
5	35265-2321-1	STOPPER		1					
6	01123-50816	BOLT, WASHER		2					M8*P1.25
7	T2195-23262	ARM, SUB SHIFT		1 ~GT8900058					
7	T2195-23263	ARM, SUB SHIFT		1 GT8900059~				<-X->	
8	04811-00160	O RING		1 ~GT8900058					DIA15.8
8	04811-00200	O RING		2 GT8900059~				<-O->	
9	T4620-44331	STOPPER		1					
10	01123-50816	BOLT, WASHER		1					M8*P1.25
11	T2195-23232	COVER, SUBMISSION		1 ~GT8900058					
11	T2195-23233	COVER, SUBMISSION		1 GT8900059~				<-O->	
12	01133-51032	BOLT, WASHER		5					M10*P1.25
13	05012-01018	PIN, PARALLEL		2					
14	T2195-24323	ARM, SUBMISSION CONNECTOR		1 ~GT8900058					
14	T2195-24324	ARM, SUBMISSION CONNECTOR		1 GT8900059~				<-X->	
15	05411-00630	PIN, SPRING		1 ~GT8900058					DIA6*30

----> Old replace New
<-X-> Not interchangeable
<-O-> Interchangeable with another part(s)
<---- New replace Old
<---> Interchangeable

CK30H-T330A

SPEED SHIFT FORK GROUP

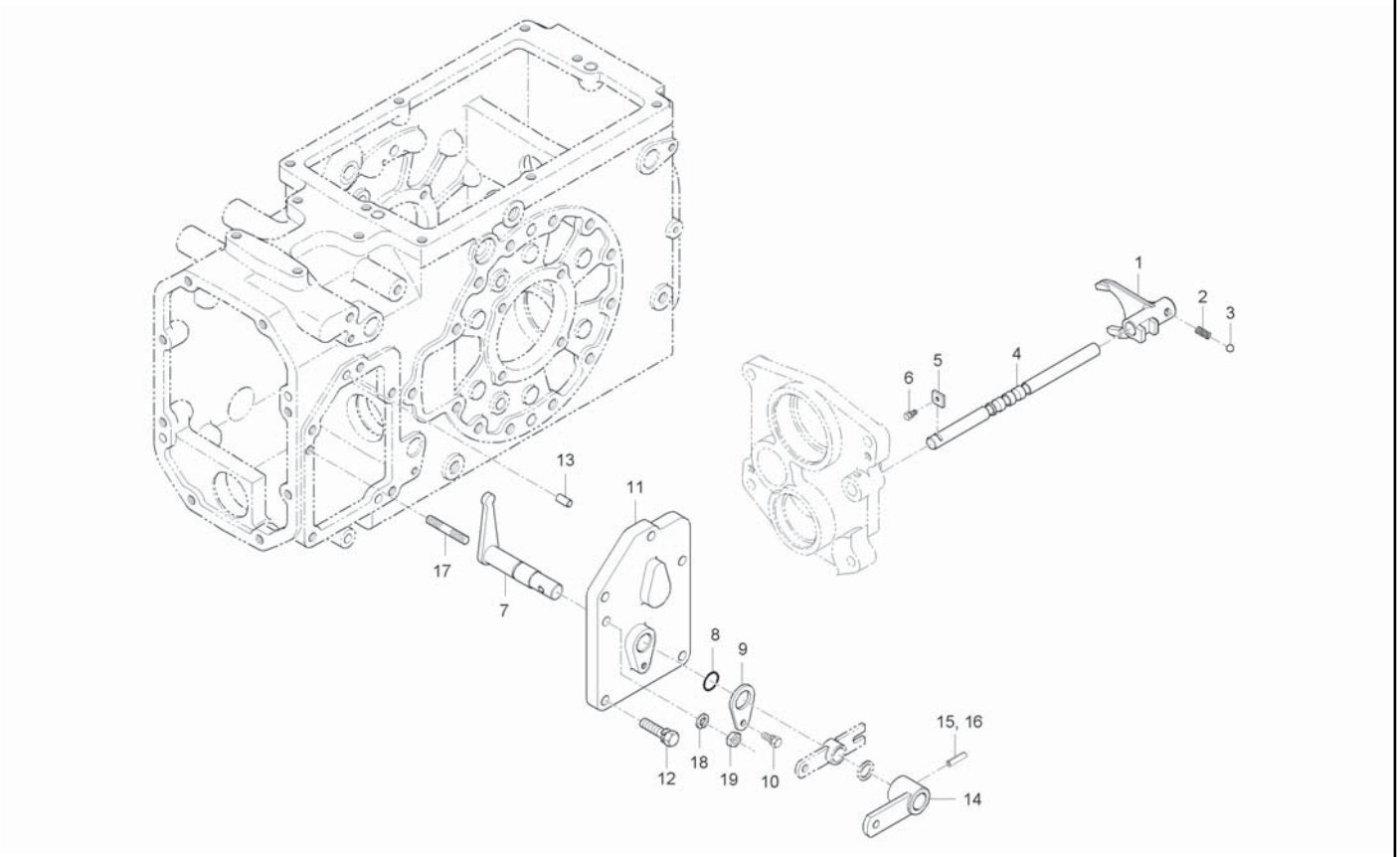

A : CK35-EU , B : CK35H-EU

No.	Part Number	Desciption	Q'TY A	Q'TY B	Q'TY C	Q'TY D	Q'TY E	I.C	Remark
15	05411-00535	PIN, SPRING		1 GT8900059~				<-X->	
16	05411-00335	PIN, SPRING		1					
17	01517-51030	STUD		1					
18	04512-50100	WASHER, SPRING		1					M10
19	02176-50100	NUT		1					M10X1.25

----> Old replace New
<-X-> Not interchangeable
<-O-> Interchangeable with another part(s)
<---- New replace Old
<---> Interchangeable

CK30M-T330A

SPEED SHIFT FORK GROUP

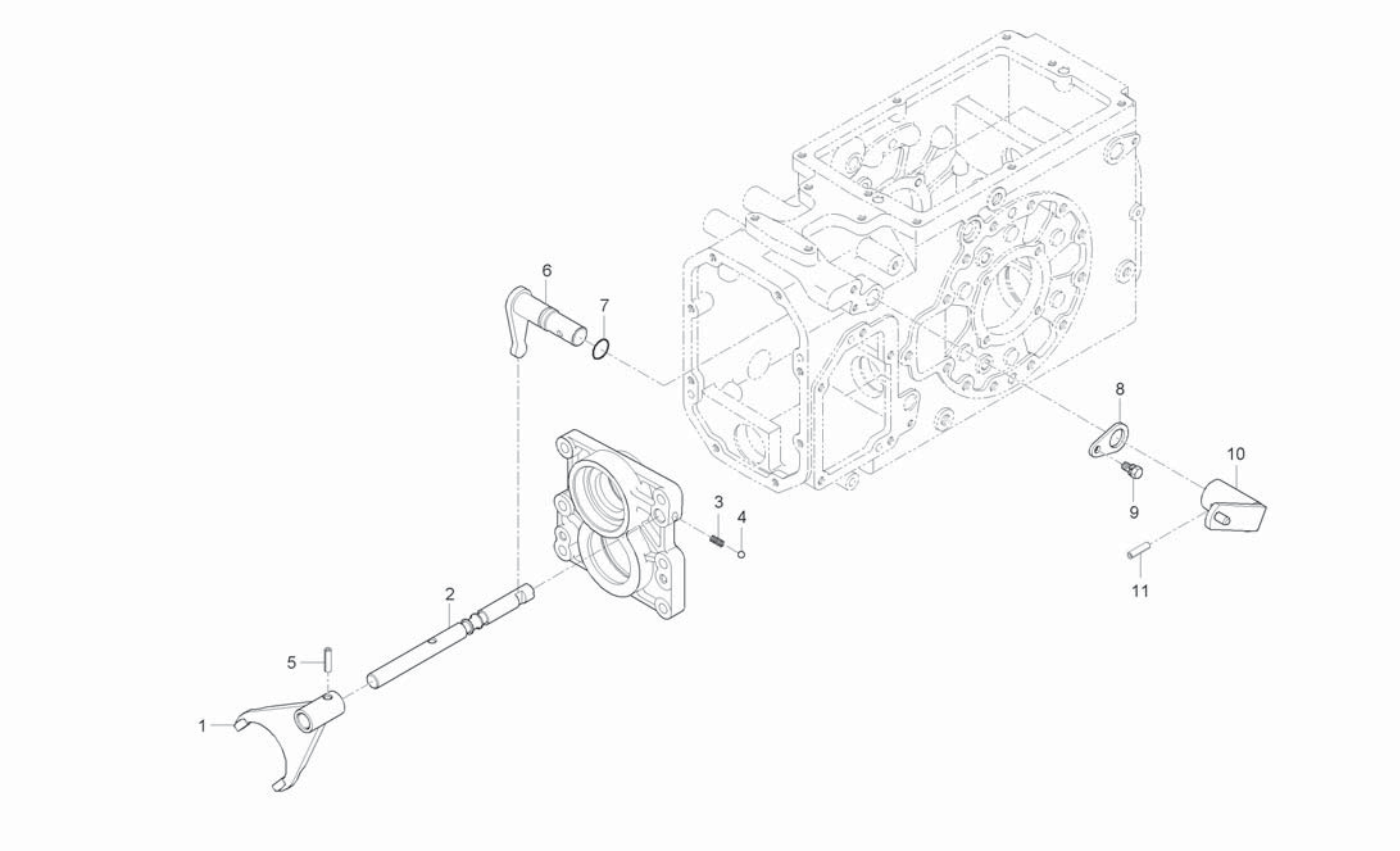

A : CK35-EU , B : CK35H-EU

No.	Part Number	Desciption	Q'TY A	Q'TY B	Q'TY C	Q'TY D	Q'TY E	I.C	Remark
1	T2185-23112	FORK, SUBMISSION	1						
2	T2185-23121	ROD, FORK SUB SHIFT	1						
3	62331-1853-2	SPRING	1						
4	07715-01605	STEEL BALL	1						
5	05411-00625	PIN, SPRING	1						
6	T2185-22171	ARM, SHUTTEL SHIFT	1						
7	04811-00160	O RING	1						
8	T4620-44331	STOPPER	1						
9	01123-50816	BOLT, WASHER	1						
10	T2185-24324	ARM, SUBMISSION CONNECTOR	1						
11	05411-00630	PIN, SPRING	1						

----> Old replace New
<-X-> Not interchangeable
<-O-> Interchangeable with another part(s)

<---- New replace Old
<---> Interchangeable

1-30ME-T345A AUX SPEED SHIFT LEVER GROUP

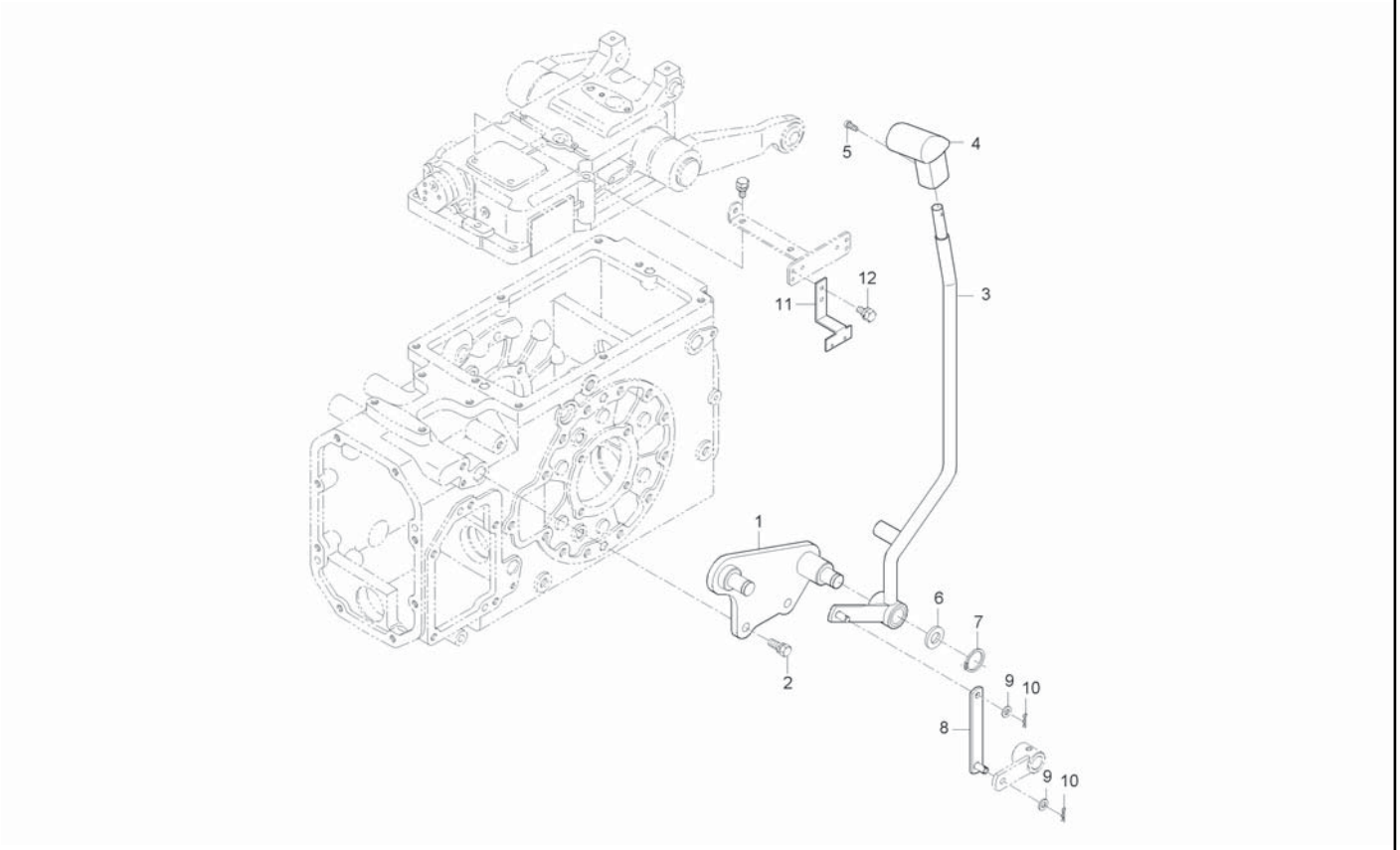

A : CK35-EU , B : CK35H-EU

No.	Part Number	Desciption	Q'TY A	Q'TY B	Q'TY C	Q'TY D	Q'TY E	I.C	Remark
1	T2185-60416	BRACKET, SUBMISSION	1						
2	01133-51225	BOLT, WASHER	2						
3	T2198-60431	LEVER, RANGE	1						
3	T2198-60432	LEVER, RANGE	1					<----	
4	T2368-60441	GRIP	1						
5	03024-50514	SCREW, WASHER	1						
6	04011-50180	WASHER, PLAIN	1						
7	04612-00180	SNAP RING	1						
8	T2185-60422	ROD, SUB SHIFT	1						
9	04013-50080	WASHER	2						
10	05525-50800	PIN, SNAP	2						
11	T2185-33771	BRACKET	1						
11	T2185-33772	BRACKET	1					<----	
12	01023-50614	BOLT, WASHER	2						

----> Old replace New
<-X-> Not interchangeable
<-O-> Interchangeable with another part(s)
<---- New replace Old
<---> Interchangeable

CK30H-T360A

HST CONTROL 1 GROUP

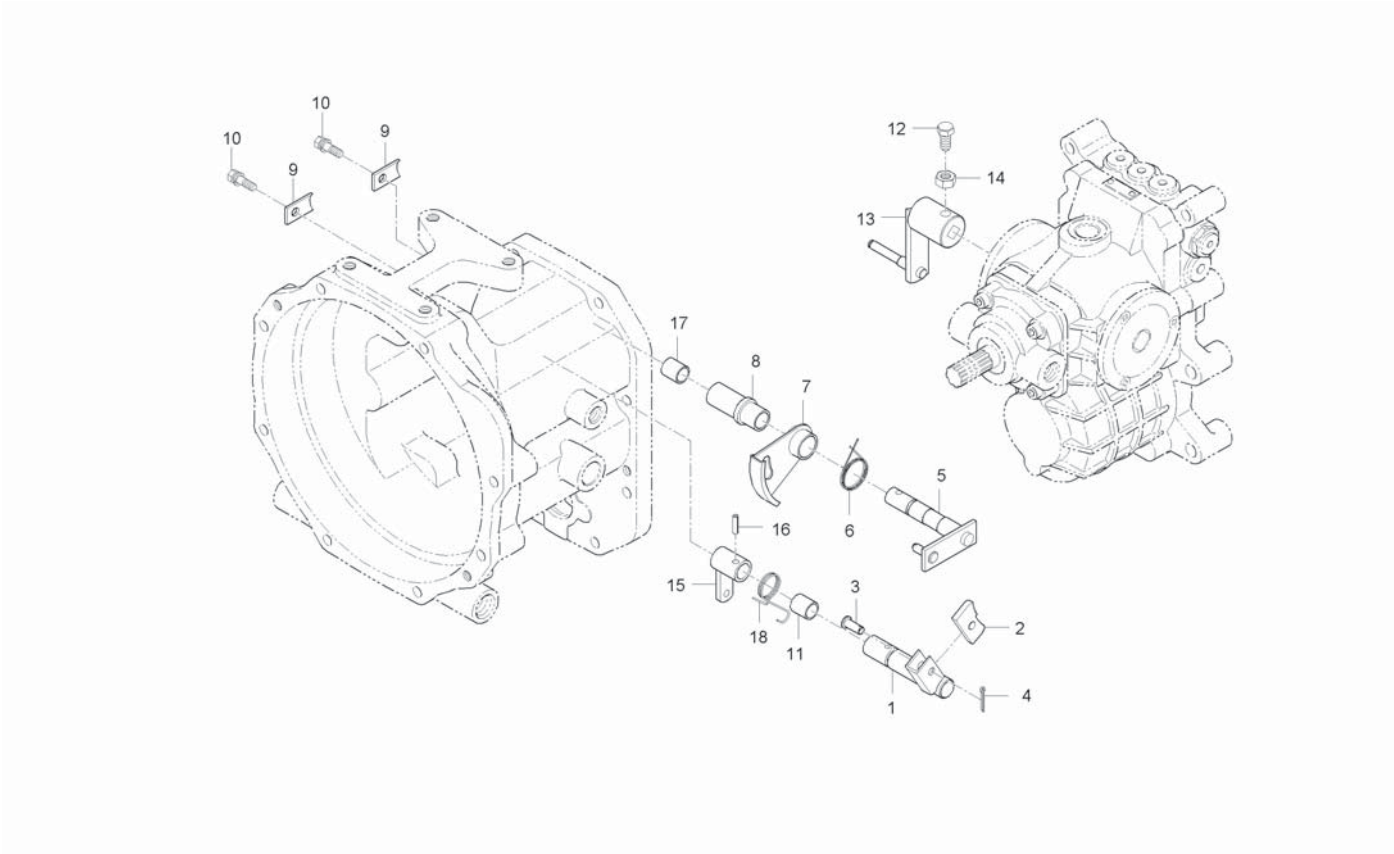

A : CK35-EU , B : CK35H-EU

No.	Part Number	Desciption	Q'TY A	Q'TY B	Q'TY C	Q'TY D	Q'TY E	I.C	Remark
1	T2195-32222	SHAFT, FIXING		1					
2	T2195-32212	SHOE, HOLDER		1					
3	05122-50825	JOINT PIN		1					
4	05511-50215	PIN, SPLIT		1					
5	T2195-32152	LEVER 2, CONNECTOR		1					
5	T2195-32153	LEVER 3, CONNECTOR		1				<----	
6	T2360-32251	SPRING, 1		1					
7	T2195-32172	ARM, FIXED		1					
8	T2195-32163	SPACER		1					
9	T2360-32182	PLATE, FIXED		2					
10	01123-50820	BOLT, WASHER		2					M8*P1.25
10	01123-50816	BOLT, WASHER		2				<----	M8*P1.25
11	08511-02030	BUSH		1					
12	T2195-32111	BOLT, HST LEVER FIXING		1					
13	T2195-32121	JOINT		1					
14	02116-50100	NUT		1					M10*P1.25
15	T2195-32232	LEVER, CONNECTOR		1					
16	05411-00635	PIN, SPRING		1					DIA5*36
16	05411-00632	PIN, SPRING		1				<--->	DIA6*32

----> Old replace New
<-X-> Not interchangeable
<-O-> Interchangeable with another part(s)
<---- New replace Old
<---> Interchangeable

CK30H-T360A

HST CONTROL 1 GROUP

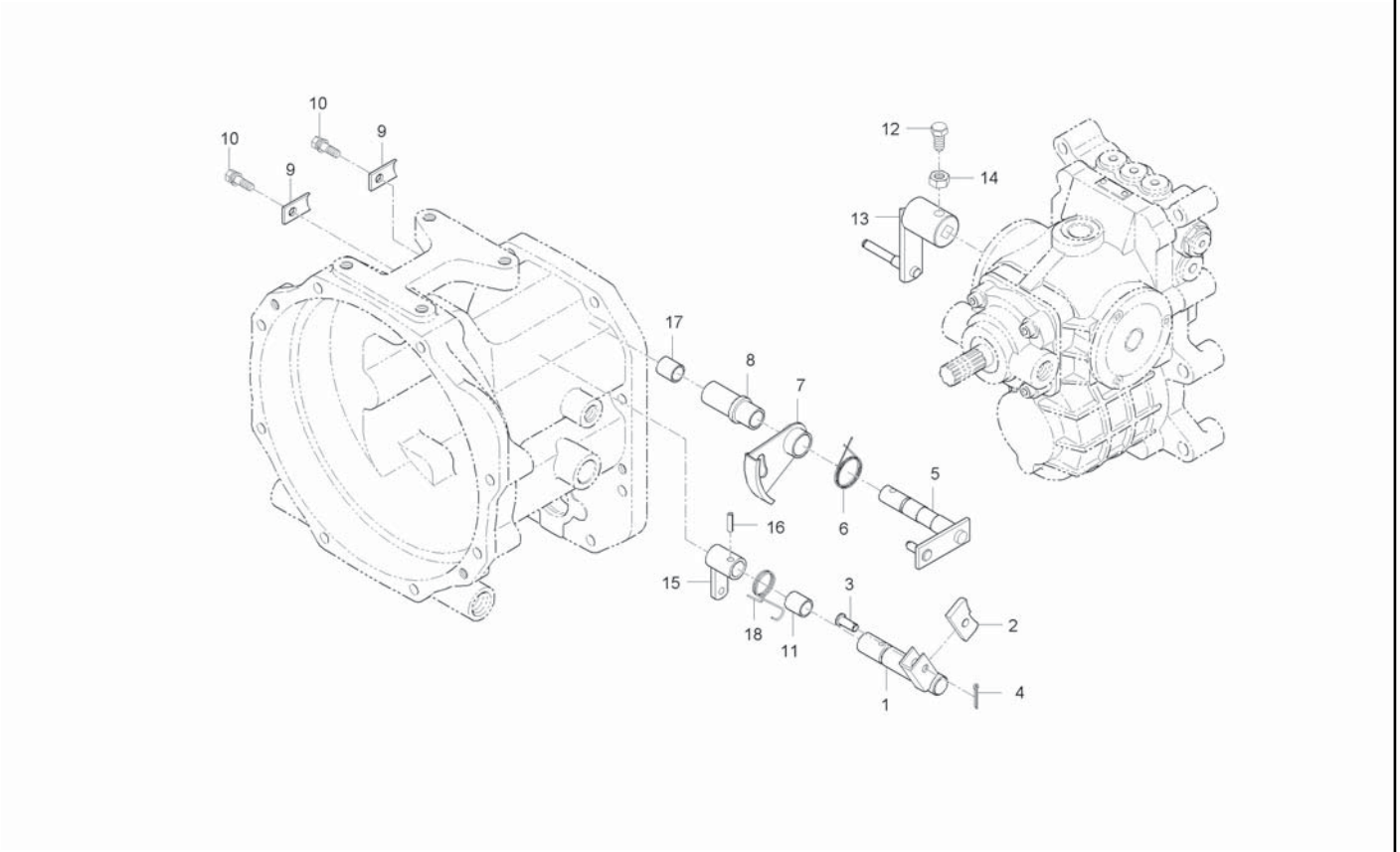

A : CK35-EU , B : CK35H-EU

No.	Part Number	Desciption	Q'TY A	Q'TY B	Q'TY C	Q'TY D	Q'TY E	I.C	Remark
17	08511-01715	BUSH		1					MB1715DU
18	T2360-32353	SPRING, 2		1					

----> Old replace New
<-X-> Not interchangeable
<-O-> Interchangeable with another part(s)
<---- New replace Old
<---> Interchangeable

1-30H-T395A PTO SHIFT LEVER GROUP

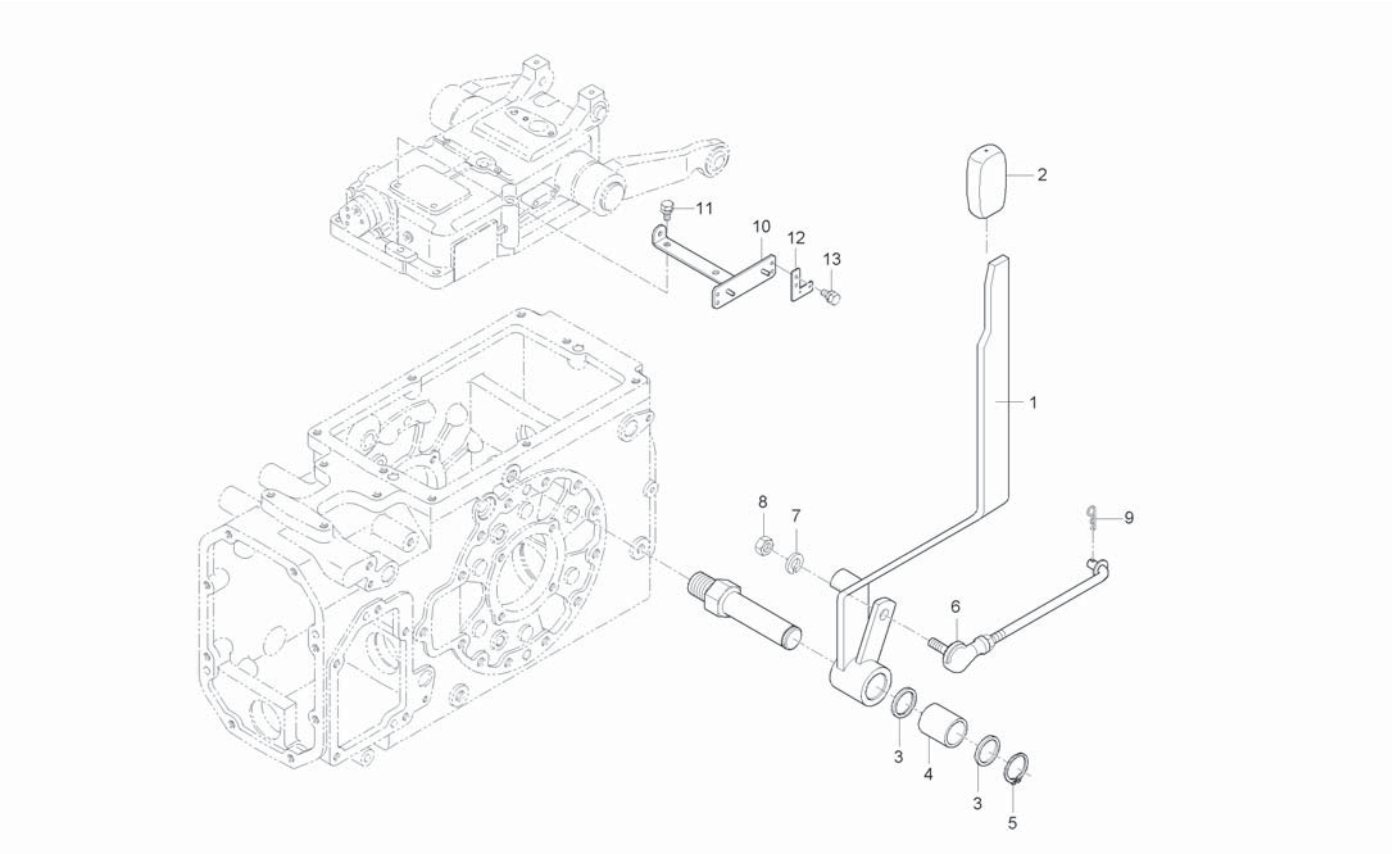

A : CK35-EU , B : CK35H-EU

No.	Part Number	Desciption	Q'TY A	Q'TY B	Q'TY C	Q'TY D	Q'TY E	I.C	Remark
1	T2181-25861	LEVER, PTO	1	1					
1	T2181-25862	LEVER, PTO	1	1				<----	
2	T2350-25871	GRIP	1	1					
3	04011-50180	WASHER, PLAIN	2	2					T2.9
4	T2185-24292	SPACER, PTO MID	1	1					
5	04612-00180	SNAP RING	1	1					
6	T2195-65651	ROD, SHUTTLE	1	1					
7	04512-50080	SPRING WASHER	1	1					M08
8	02156-50080	NUT	1	1					M8XP1.25
9	05525-50800	PIN, SNAP	1	1					
10	T2185-33761	BRACKET	1	1					
10	T2185-33762	BRACKET	1	1				<----	
11	01123-50814	BOLT, WASHER	2	2					M8*P1.25
12	T2185-33781	BRACKET	1	1					
12	T2185-33782	BRACKET	1	1				<----	
13	01023-50614	BOLT, WASHER	2	2					M6P1.0

----> Old replace New
<-X-> Not interchangeable
<-O-> Interchangeable with another part(s)
<---- New replace Old
<---> Interchangeable

CK30H-T420A

FRONT DRIVE FORK GROUP

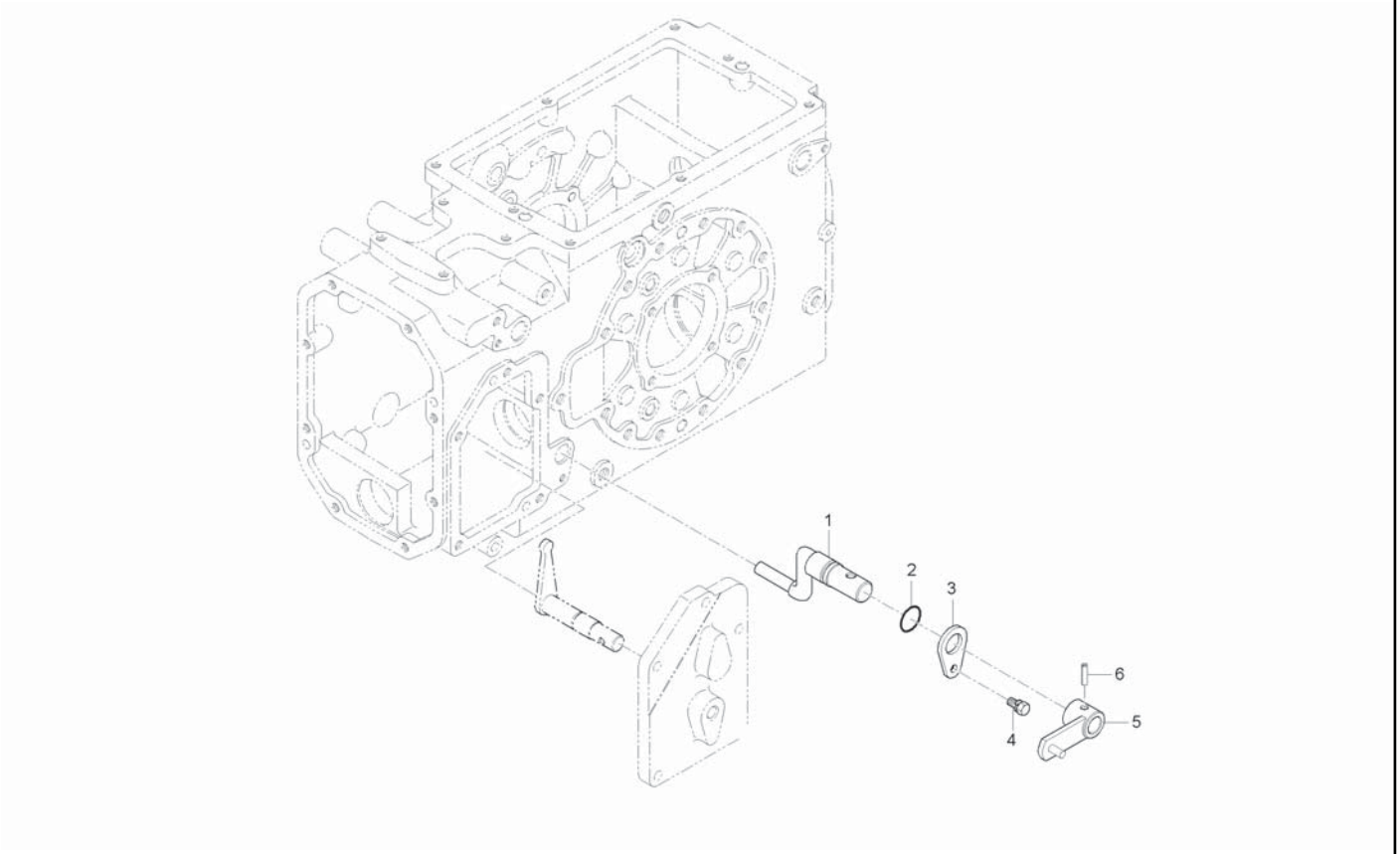

A : CK35-EU , B : CK35H-EU

No.	Part Number	Desciption	Q'TY A	Q'TY B	Q'TY C	Q'TY D	Q'TY E	I.C	Remark
1	T2185-44312	ARM, SHIFT		1					
1	T2185-44313	ARM, SHIFT		1				<-X->	
2	04811-00200	O RING		2					
3	T4620-44331	STOPPER		1					
4	01123-50812	BOLT, WASHER		1					M8P1.25
5	T2195-44761	LINK 1, FRONT DRIVE		1					
5	T2195-44762	LINK 1, FRONT DRIVE		1				<----	
6	05411-00630	PIN, SPRING		1					DIA6*30
7	04011-50180	WASHER, PLAIN		1					T2.9
8	T2185-44773	LINK 2, FRONT DRIVE		1					

----> Old replace New
<-X-> Not interchangeable
<-O-> Interchangeable with another part(s)
<---- New replace Old
<---> Interchangeable

CK30M-T420A

FRONT DRIVE FORK GROUP

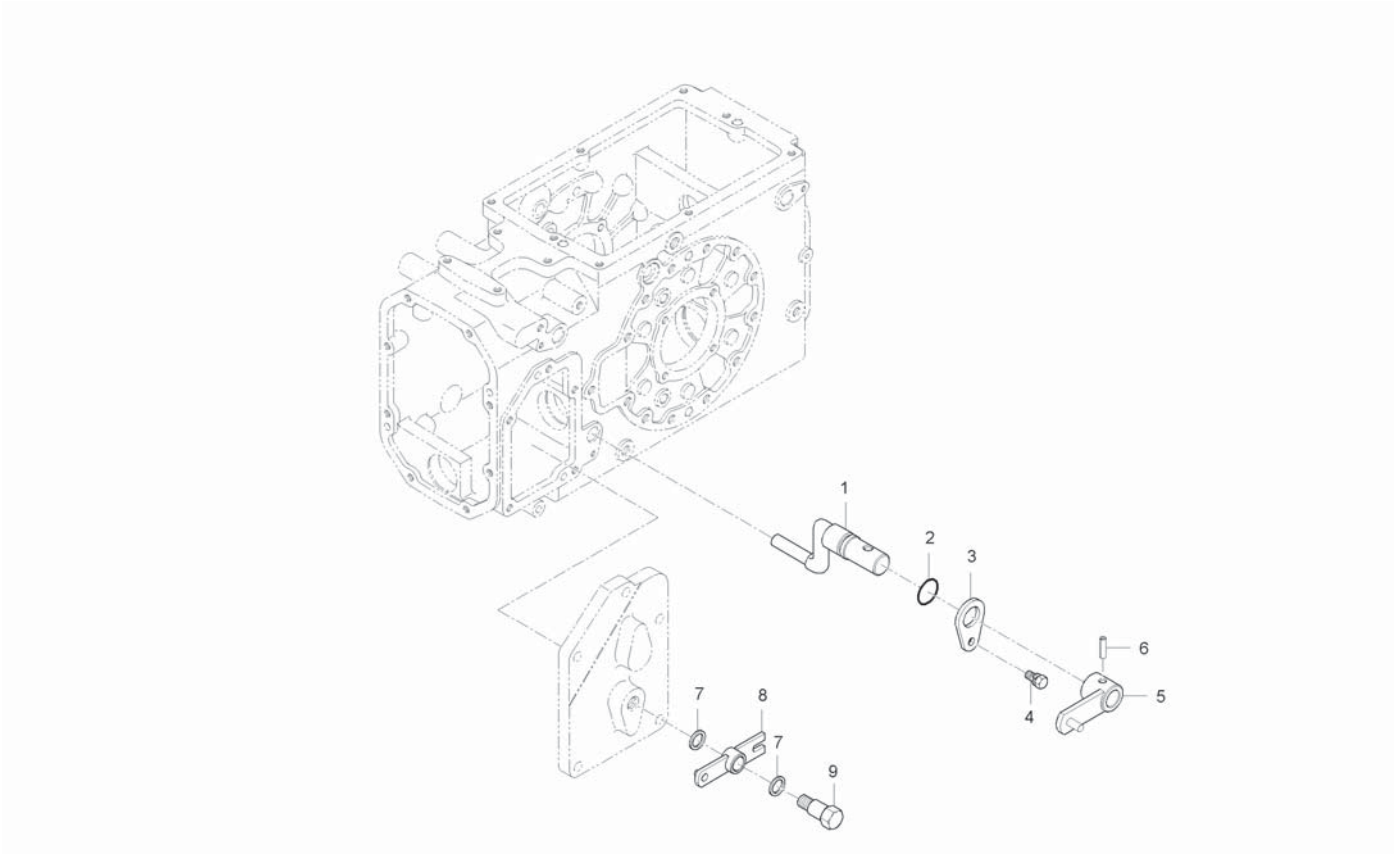

A : CK35-EU , B : CK35H-EU

No.	Part Number	Desciption	Q'TY A	Q'TY B	Q'TY C	Q'TY D	Q'TY E	I.C	Remark
1	T2185-44312	ARM, SHIFT	1 ~GT8100064						
1	T2185-44313	ARM, SHIFT	1 GT8100065~					<-0->	
2	04811-00160	O RING	1 ~GT8100064						
2	04811-00200	O RING	2 GT8100065~					<-0->	
3	T4620-44331	STOPPER	1						
4	01123-50812	BOLT, WASHER	1						
5	T2185-44764	LINK 1, FRONT DRIVE	1						
6	05411-00630	PIN, SPRING	1						
7	P5370-41091	WASHER, SHAFT 2	2						
8	T2185-44773	LINK 2, FRONT DRIVE	1						
9	T2185-24332	SHAFT, FRONT DRIVE	1						

----> Old replace New
<-X-> Not interchangeable
<-0-> Interchangeable with another part(s)
<---- New replace Old
<---> Interchangeable

CK30M-T440A

REAR DIFF SYSTEM GROUP

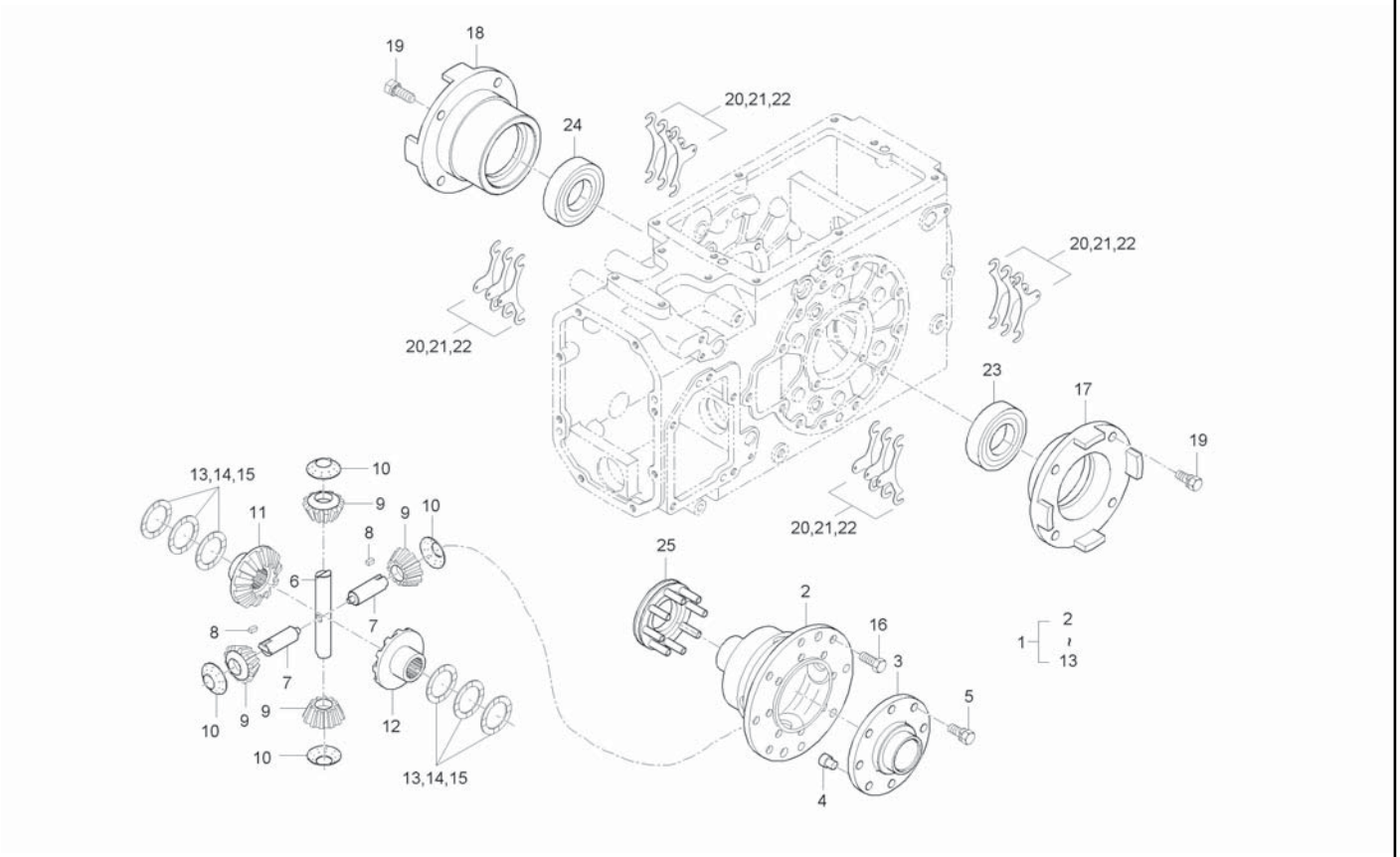

A : CK35-EU , B : CK35H-EU

No.	Part Number	Desciption	Q'TY A	Q'TY B	Q'TY C	Q'TY D	Q'TY E	I.C	Remark
1	T2185-26101	DIFF SYSTEM ASSY, RR	1	1					
1	T2185-26102	DIFF SYSTEM ASSY, RR	1 ~GT8100064	1 ~GT8900058				<--->	
1	T2185-26103	DIFF SYSTEM ASSY, RR	1 GT8100065~	1 GT8900059~				<-0->	
1	T2185-26104	DIFF SYSTEM ASSY, RR	1	1				<--->	
1	T2195-26101	ASSY DIFFRENTIAL	1	1				<-0->	
2	38240-2651-5	CASE, DIFFERENTIAL SYSTEM	1	1					
2	T2185-26511	CASE, DIFFERENTIAL SYSTEM	1	1				---->	
2	T2195-26511	CASE,DIFFRENTIAL	1	1				<-0->	
3	T2185-26521	COVER, DIFFERENTIAL CASE	1	1					
3	T2195-26521	CAP, DIFFERENTIAL CASE	1	1				<-0->	
4	37300-2817-2	PIN, PARALLEL	2	2					
5	01133-51025	BOLT, WASHER	8	8					M10*1.25
6	38430-2634-3	SHAFT 1, DIFFERENTIAL PINION	1 ~GT8100064	1					
6	T2185-26341	SHAFT 1, DIFFERENTIAL PINION	1 GT8100065~	1				<-X->	
7	38430-2633-3	SHAFT 2, DIFFERENTIAL PINION	2	2					
8	31220-2628-1	KEY	2	2					
9	T2240-26353	PINION, DIFFERENTIAL	4	4					
9	T2240-26354	PINION, DIFFERENTIAL	2	2				<--->	
10	31220-2639-2	WASHER, DIFF PINION	2	2					

----> Old replace New
<-X-> Not interchangeable
<-0-> Interchangeable with another part(s)
<---- New replace Old
<---> Interchangeable

CK30M-T440A

REAR DIFF SYSTEM GROUP

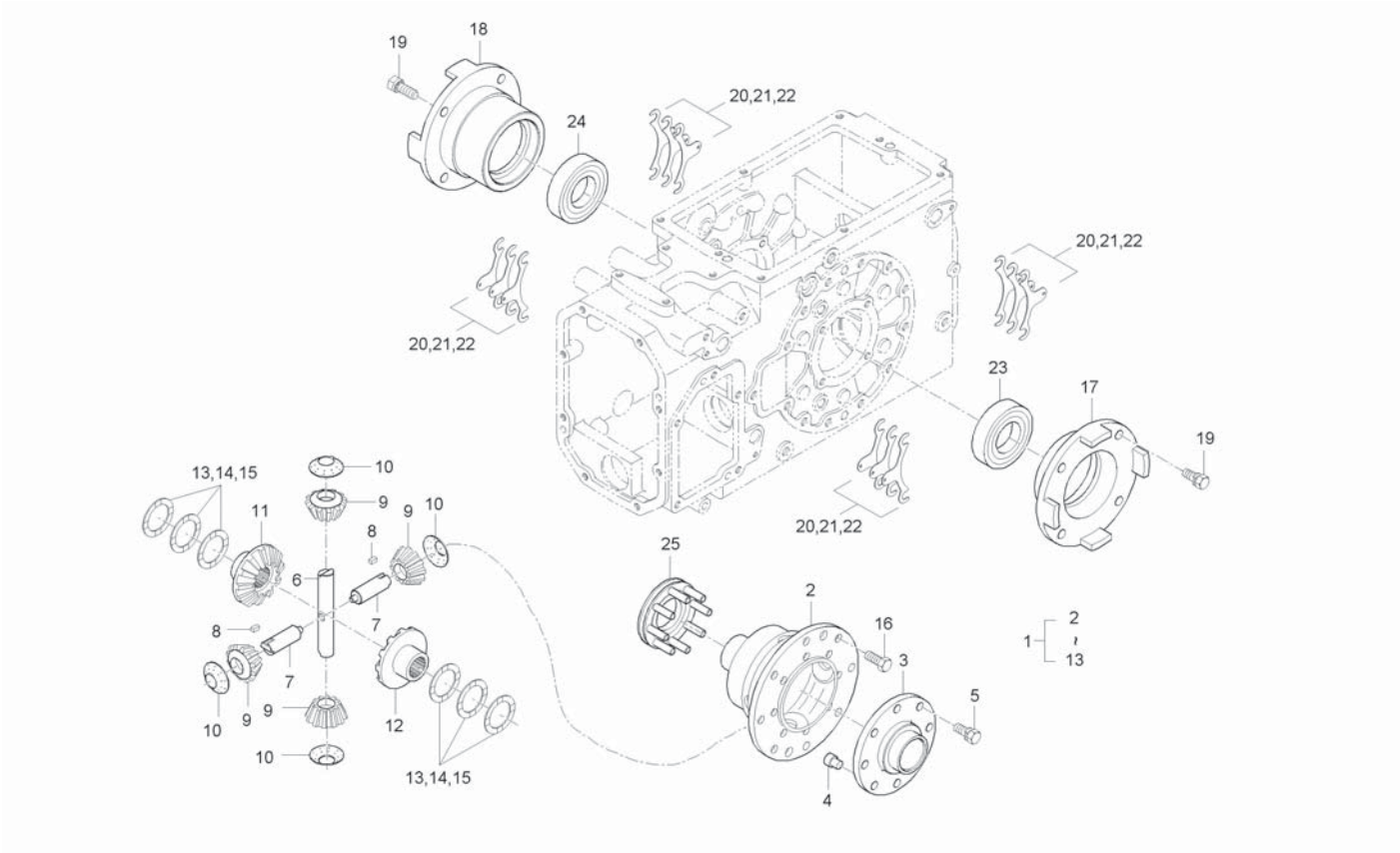

A : CK35-EU , B : CK35H-EU

No.	Part Number	Desciption	Q'TY A	Q'TY B	Q'TY C	Q'TY D	Q'TY E	I.C	Remark
11	37300-2643-2	GEAR, DIFF RH	1	1					
12	37300-2644-2	GEAR DIFE SIDE, LH	1	1					
13	37300-2648-1	WASHER 1, DIFF	2	2					
14	37300-2649-1	WASHER 2, DIFF	2	2					
15	38240-2647-2	WASHER, DIFF.3	2	2					
16	37800-4387-1	BOLT	8	8					
16	T4115-43871	BOLT	8	8				<-0->	
17	T2185-26561	CASE, BEARING LH	1	1					
18	T2185-26551	CASE, BEARING RH	1	1					
19	01133-51030	BOLT, WASHER	8	8					M10*1.25
20	37150-2616-1	SHIM, 0.2	12	12					
21	37150-2617-1	SHIM, 0.1	8	8					
22	37150-2618-1	SHIM, 0.5	4	4					
23	08101-06010	BALL BEARING	1	1					#6010
24	08101-06009	BALL BEARING	1	1					#6009
25	37300-2661-4	SHIFT, DIFFRENTIAL HOLD	1	1					

----> Old replace New
<-X-> Not interchangeable
<-O-> Interchangeable with another part(s)
<---- New replace Old
<---> Interchangeable

CK30H-T450A

DIFF LOCK FORK GROUP

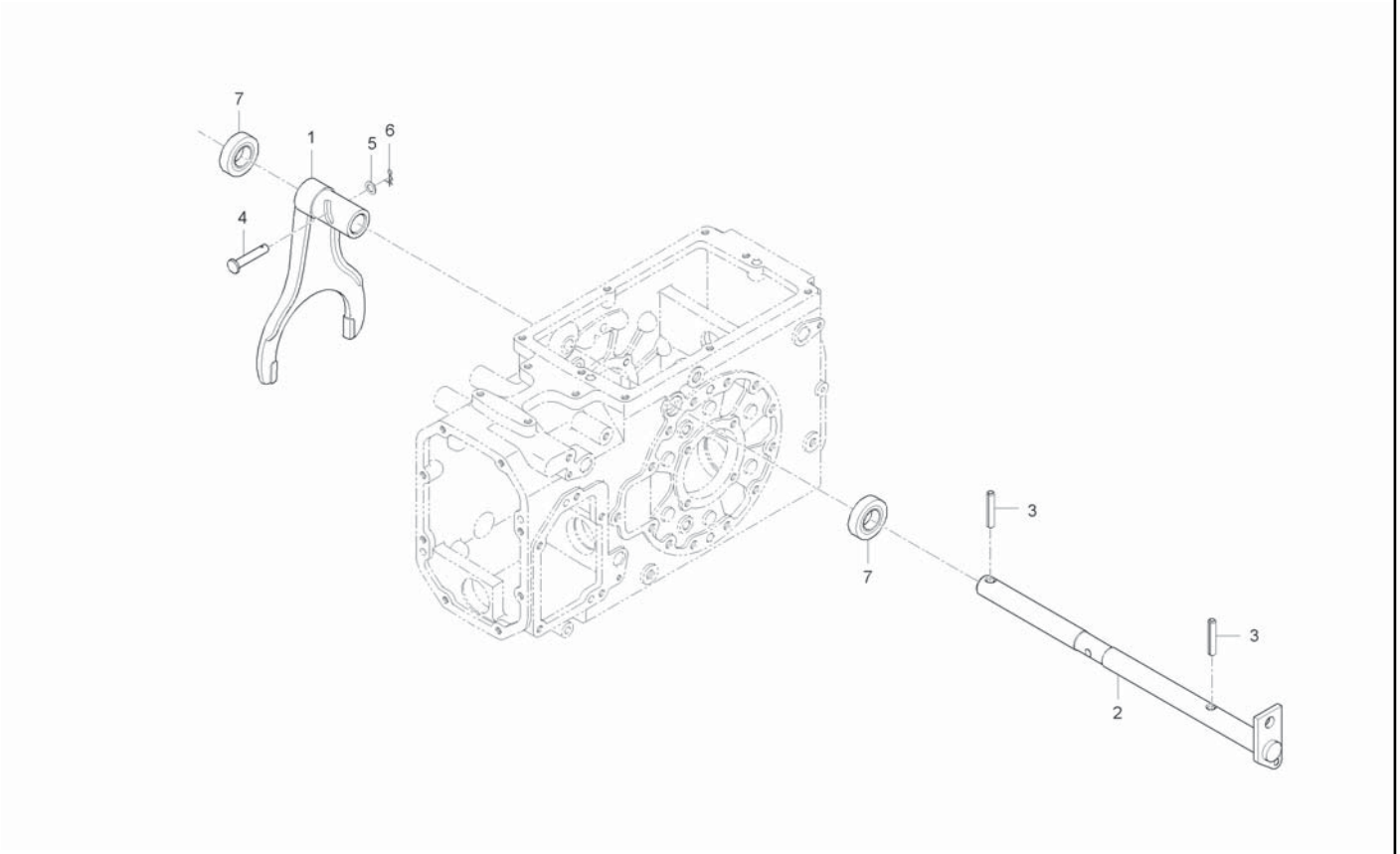

A : CK35-EU , B : CK35H-EU

No.	Part Number	Desciption	Q'TY A	Q'TY B	Q'TY C	Q'TY D	Q'TY E	I.C	Remark
1	T2440-26632	FORK, DIFFERENTIAL FIXING		1					
2	T2195-26684	SHAFT, DIFFERENTIAL LOCK FORK		1					
3	05411-00635	PIN, SPRING		2					DIA5*36
4	31355-2662-1	PIN		1					
5	04013-50060	WASHER, PLAIN		1					M6
6	52300-3411-1	PIN, SNAP		1					
7	09500-16287	SEAL, OIL		2					

----> Old replace New
<-X-> Not interchangeable
<-O-> Interchangeable with another part(s)
<---- New replace Old
<---> Interchangeable

CK30M-T450A

DIFF LOCK FORK GROUP

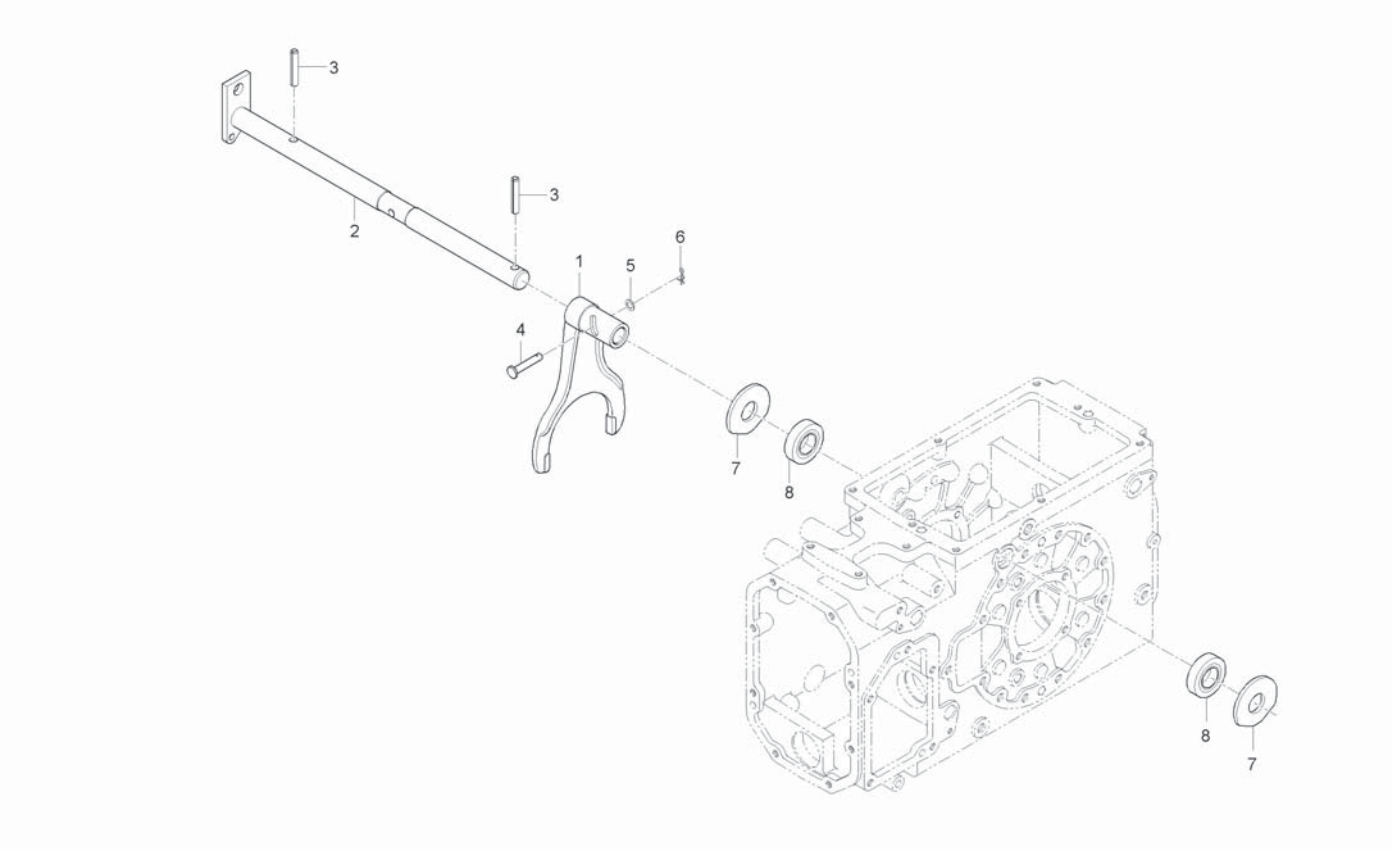

A : CK35-EU , B : CK35H-EU

No.	Part Number	Desciption	Q'TY A	Q'TY B	Q'TY C	Q'TY D	Q'TY E	I.C	Remark
1	T2440-26632	FORK, DIFFERENTIAL FIXING	1						
2	T2185-26683	SHAFT, DIFFERENTIAL LOCK FORK	1						
2	T2185-26684	SHAFT, DIFFERENTIAL LOCK FORK	1					<--->	
3	05411-00635	PIN, SPRING	2						
4	31355-2662-1	PIN	1						
5	04013-50060	WASHER, PLAIN	1						
6	52300-3411-1	PIN, SNAP	1						
7	31355-2669-1	WASHER	2						
8	09500-16287	SEAL, OIL	2						

----> Old replace New
<-X-> Not interchangeable
<-O-> Interchangeable with another part(s)
<---- New replace Old
<---> Interchangeable

CK30M-T460A

BRAKE CASE GROUP

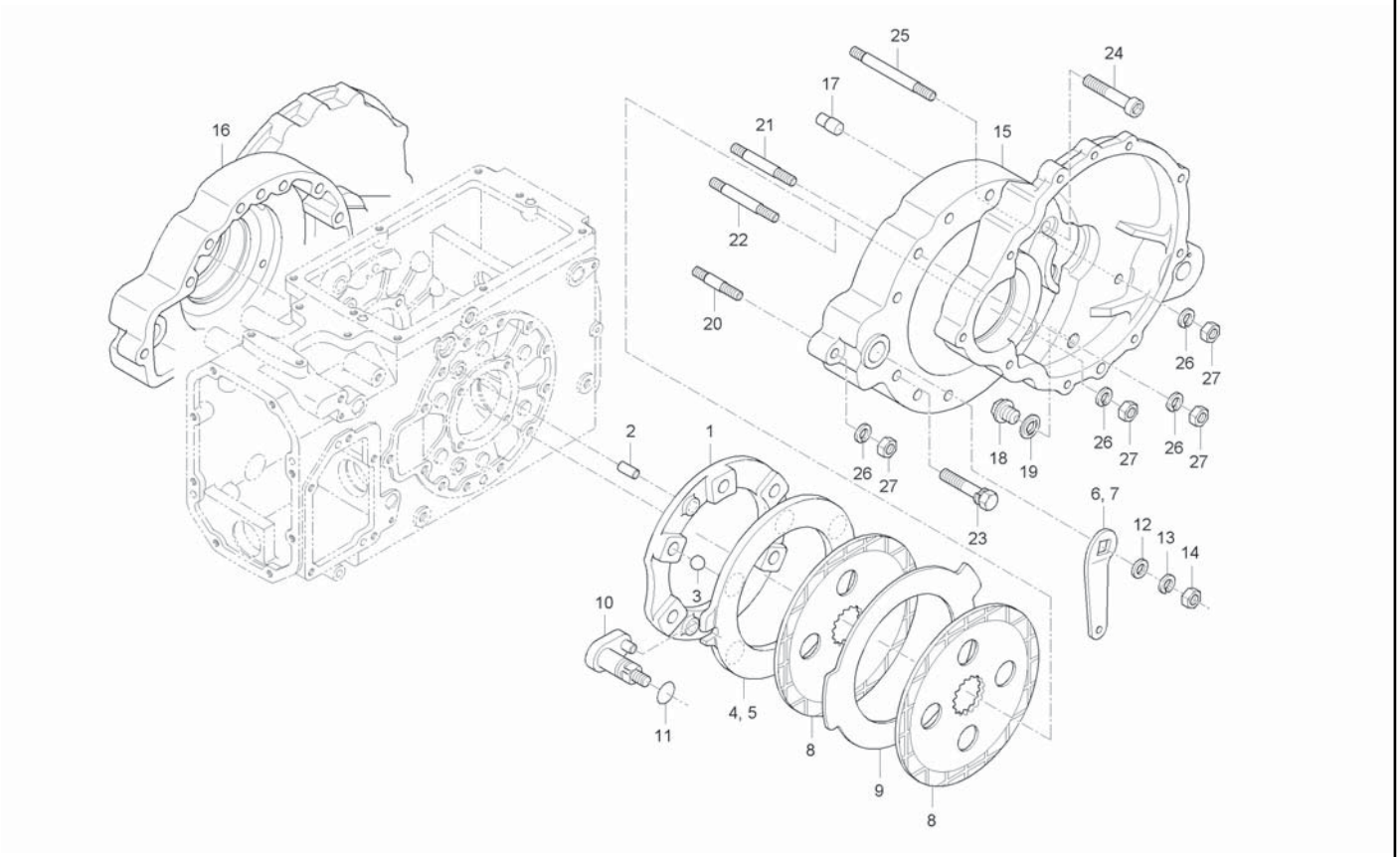

A : CK35-EU , B : CK35H-EU

No.	Part Number	Desciption	Q'TY A	Q'TY B	Q'TY C	Q'TY D	Q'TY E	I.C	Remark
1	T2440-26572	GUIDE, BALL		2					
2	37805-4350-1	PIN, PARALLEL		4					
3	07715-00805	STEEL BALL		12					5/8"
4	T2240-28272	PLATE, CAM RH		1					
5	T2240-28242	PLATE, CAM LH		1					
6	T2185-28221	LEVER, BRAKE CAM LH		1					
7	T2185-28231	LEVER, BRAKE CAM RH		1					
8	T2440-28202	BRAKE DISK		4					
8	T2440-28203	BRAKE DISK		4				<--->	
9	T2440-28182	PLATE		2					
10	T2546-28211	CAM, BRAKE		2					
11	04811-00180	O RING		2					P18
12	04015-50140	WASHER, PLAIN		2					M14
13	04512-50140	WASHER, SPRING		2					
14	02174-50140	NUT		2					M14P1.5
14	02176-50140	NUT		2				<--->	M14*P1.5
15	T2445-28147	CASE, BRAKE LH		1					
16	T2445-28157	CASE, BRAKE RH		1					
17	37305-2817-1	PIN, PARALLEL		4					

----> Old replace New
<-X-> Not interchangeable
<-O-> Interchangeable with another part(s)
<---- New replace Old
<---> Interchangeable

CK30M-T460A

BRAKE CASE GROUP

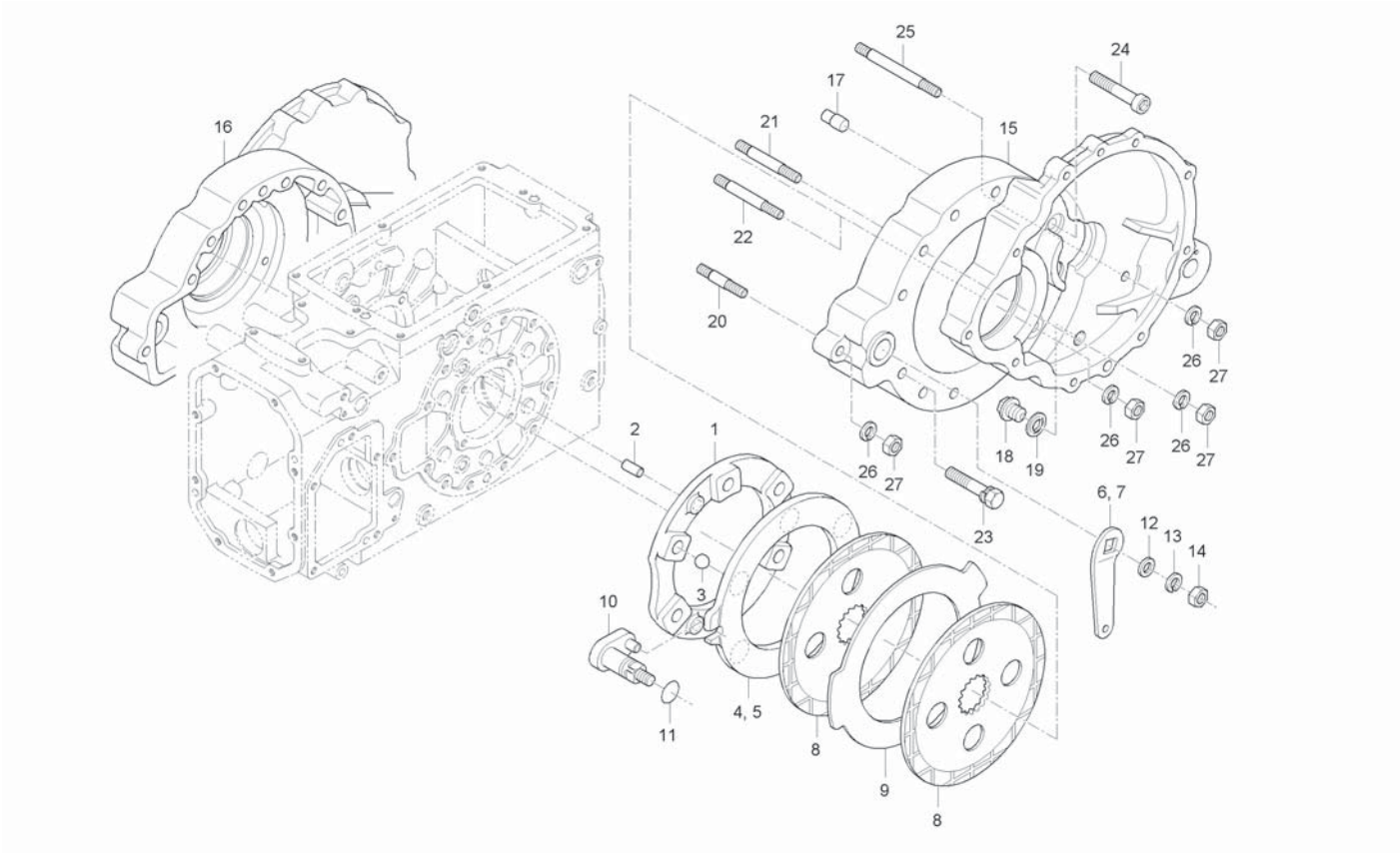

A : CK35-EU , B : CK35H-EU

No.	Part Number	Desciption	Q'TY A	Q'TY B	Q'TY C	Q'TY D	Q'TY E	I.C	Remark
18	34150-1426-1	PLUG, OIL DRAIN		2					
19	04717-02150	WASHER, SEAL		2					
20	01574-51240	STUD		2					M12*1.25*30
21	01173-51265	BOLT		12					M12*1.25
22	01173-51270	BOLT		4					
23	01173-51265	BOLT		4					M12*1.25
24	T2185-28351	BOLT, HEXAGON SOCKET		4					
25	01574-51285	STUD		2					M12*1.25*85
26	04512-50120	WASHER, SPRING		24					M12
27	02176-50120	NUT		4					M12*1.25
28	T2440-28162	PACKING		2					
29	T2440-28192	PACKING		2					

----> Old replace New
<-X-> Not interchangeable
<-O-> Interchangeable with another part(s)
<---- New replace Old
<---> Interchangeable

CK30ME-T460A

BRAKE CASE GROUP

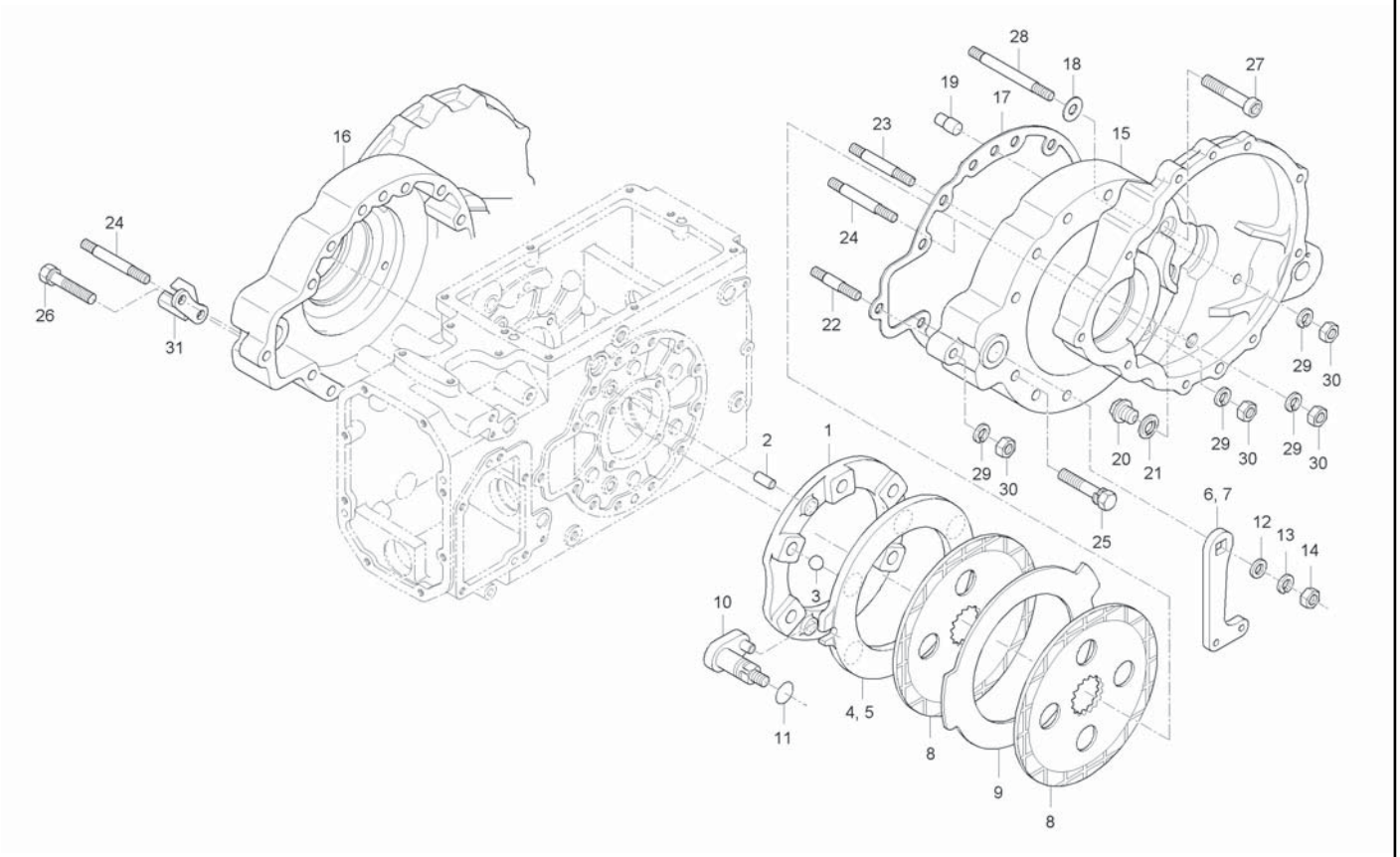

A : CK35-EU , B : CK35H-EU

No.	Part Number	Desciption	Q'TY A	Q'TY B	Q'TY C	Q'TY D	Q'TY E	I.C	Remark
1	T2440-26572	GUIDE, BALL	2						
2	37805-4350-1	PIN, PARALLEL	4						
3	07715-00805	STEEL BALL	12						
4	T2240-28272	PLATE, CAM RH	1						
4	T4125-28271	PLATE,CAM RH	1					<----	
5	T2240-28242	PLATE, CAM LH	1						
5	T4125-28241	PLATE,CAM LH	1					<----	
6	T2181-28221	LEVER, BRAKE CAM LH	2						
7	T2181-28231	LEVER, BRAKE CAM RH	1						
8	T2440-28202	BRAKE DISK	4						
9	T2440-28182	PLATE	2						
10	37720-2821-7	CAM, BRAKE	2						
10	T2546-28211	CAM, BRAKE	2					<--->	
11	04811-00180	O RING	2						
12	04015-50140	WASHER, PLAIN	2						
13	04512-50140	WASHER, SPRING	2						
14	02174-50140	NUT	2						
15	T2445-28147	CASE, BRAKE LH	1						
16	T2445-28157	CASE, BRAKE RH	1						

----> Old replace New
<-X-> Not interchangeable
<-O-> Interchangeable with another part(s)
<---- New replace Old
<---> Interchangeable

CK30ME-T460A

BRAKE CASE GROUP

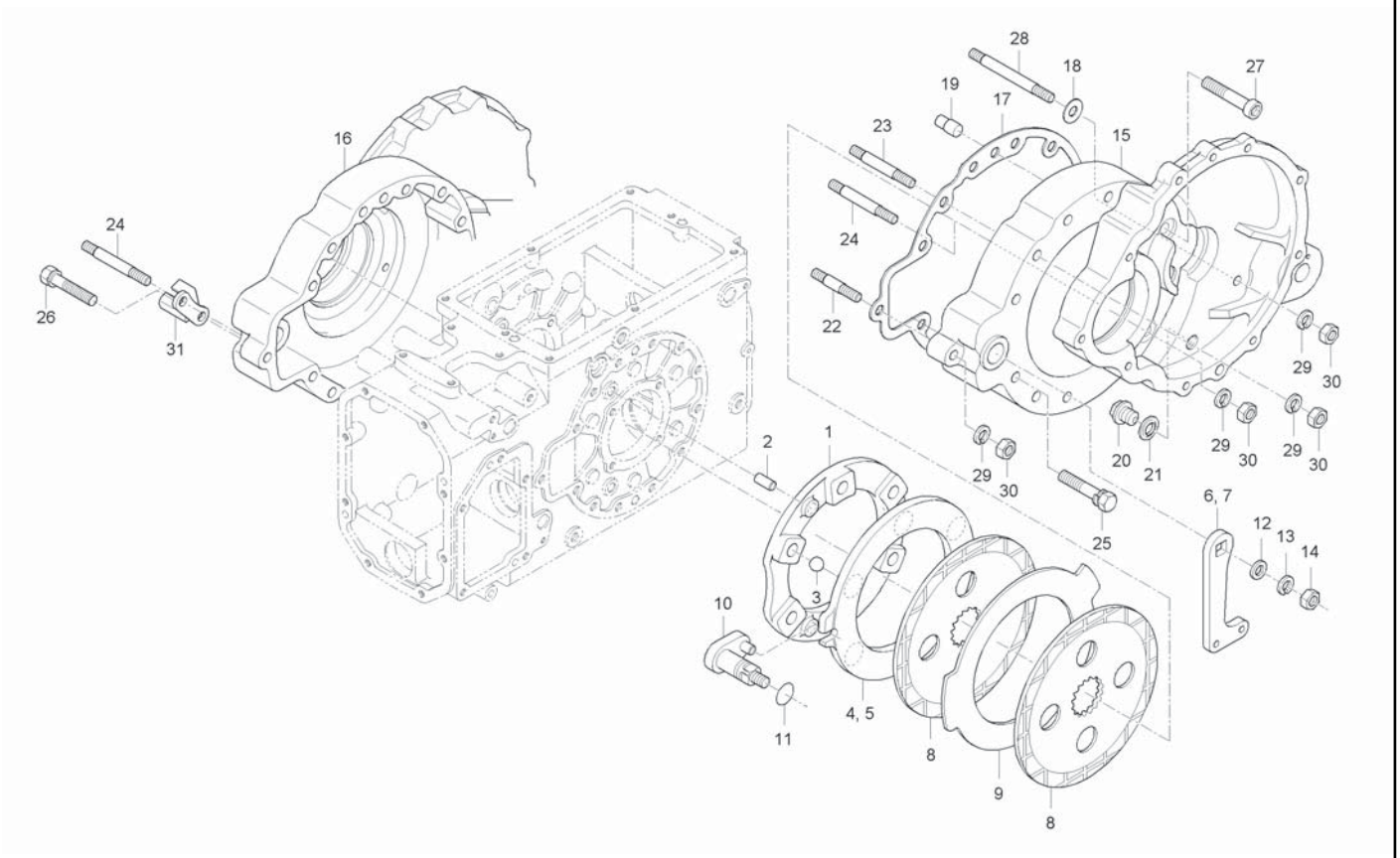

A : CK35-EU , B : CK35H-EU

No.	Part Number	Desciption	Q'TY A	B	C	D	E	I.C	Remark
17	T2440-28162	PACKING	2						
18	T2440-28192	PACKING	2						
19	37305-2817-1	PIN, PARALLEL	4						
20	34150-1426-1	PLUG, OIL DRAIN	2						
21	04717-02150	WASHER, SEAL	2						
22	01574-51240	STUD	2						
23	01173-51265	BOLT	11						
24	01173-51270	BOLT	5						
25	01173-51265	BOLT	3						
26	01173-51270	BOLT	1						
27	T2185-28351	BOLT, HEXAGON SOCKET	4						
28	01574-51285	STUD	2						
29	04512-50120	WASHER, SPRING	24						
30	02176-50120	NUT	4						
31	T2181-55931	BRACKET, CABLE SUPPORT	1						

----> Old replace New
<-X-> Not interchangeable
<-O-> Interchangeable with another part(s)
<---- New replace Old
<---> Interchangeable

CK35M-T460A

BRAKE CASE GROUP

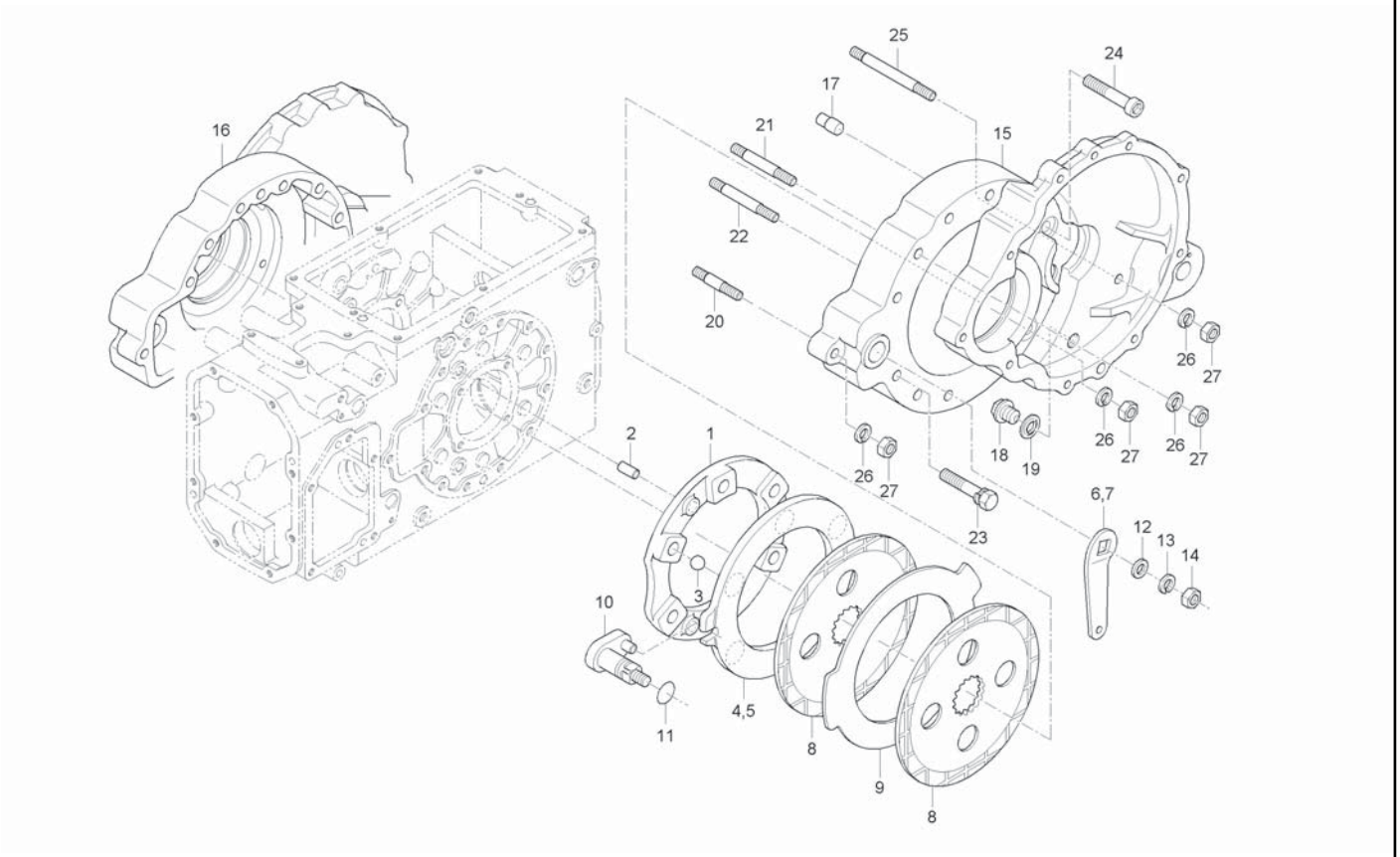

A : CK35-EU , B : CK35H-EU

No.	Part Number	Desciption	Q'TY A	Q'TY B	Q'TY C	Q'TY D	Q'TY E	I.C	Remark
1	T2440-26572	GUIDE, BALL		2					
2	37805-4350-1	PIN, PARALLEL		4					
3	07715-00805	STEEL BALL		12					5/8"
4	T4125-28241	PLATE,CAM LH		1					
5	T4125-28271	PLATE,CAM RH		1					
6	T2185-28221	LEVER, BRAKE CAM LH		1					
7	T2185-28231	LEVER, BRAKE CAM RH		1					
8	T2440-28203	BRAKE DISK		4					
9	T2440-28182	PLATE		2					
10	T2546-28211	CAM, BRAKE		2					
11	04811-00180	O RING		2					P18
12	04015-50140	WASHER, PLAIN		2					M14
13	04512-50140	WASHER, SPRING		2					
14	02176-50140	NUT		2					M14*P1.5
15	T2445-28147	CASE, BRAKE LH		1					
16	T2445-28157	CASE, BRAKE RH		1					
17	37305-2817-1	PIN, PARALLEL		4					
18	34150-1426-1	PLUG, OIL DRAIN		2					
19	04717-02150	WASHER, SEAL		2					

----> Old replace New
<-X-> Not interchangeable
<-O-> Interchangeable with another part(s)
<---- New replace Old
<---> Interchangeable

CK35M-T460A

BRAKE CASE GROUP

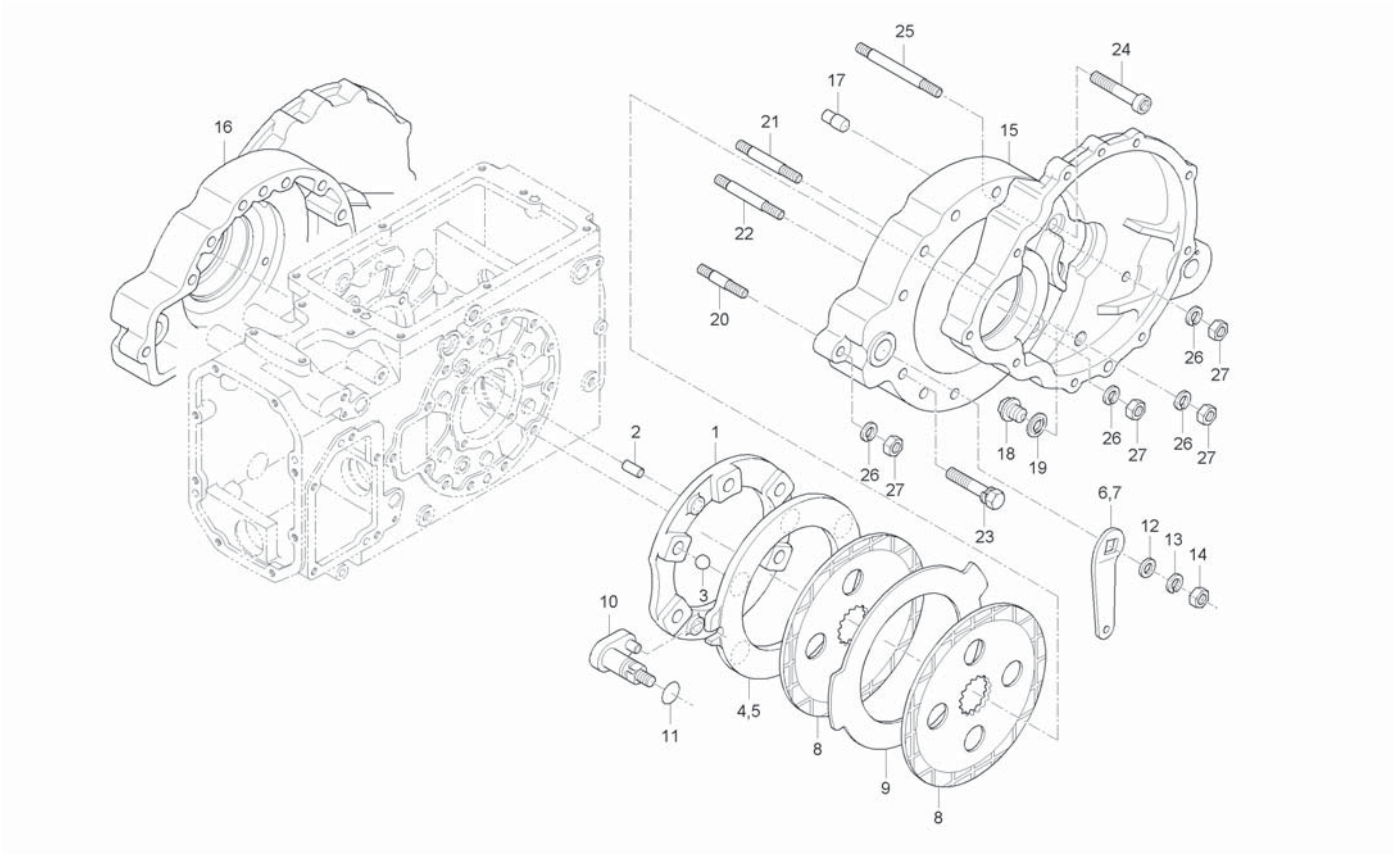

A : CK35-EU , B : CK35H-EU

No.	Part Number	Desciption	Q'TY A	Q'TY B	Q'TY C	Q'TY D	Q'TY E	I.C	Remark
20	01574-51240	STUD		2					M12*1.25*30
21	01173-51265	BOLT		12					M12*1.25
22	01173-51270	BOLT		4					
23	01173-51265	BOLT		4					M12*1.25
24	T2185-28351	BOLT, HEXAGON SOCKET		4					
25	01574-51285	STUD		2					M12*1.25*85
26	04512-50120	WASHER, SPRING		24					M12
27	02176-50120	NUT		4					M12*1.25

----> Old replace New
<-X-> Not interchangeable
<-O-> Interchangeable with another part(s)
<---- New replace Old
<---> Interchangeable

CK30M-T480A

REAR AXLE GROUP

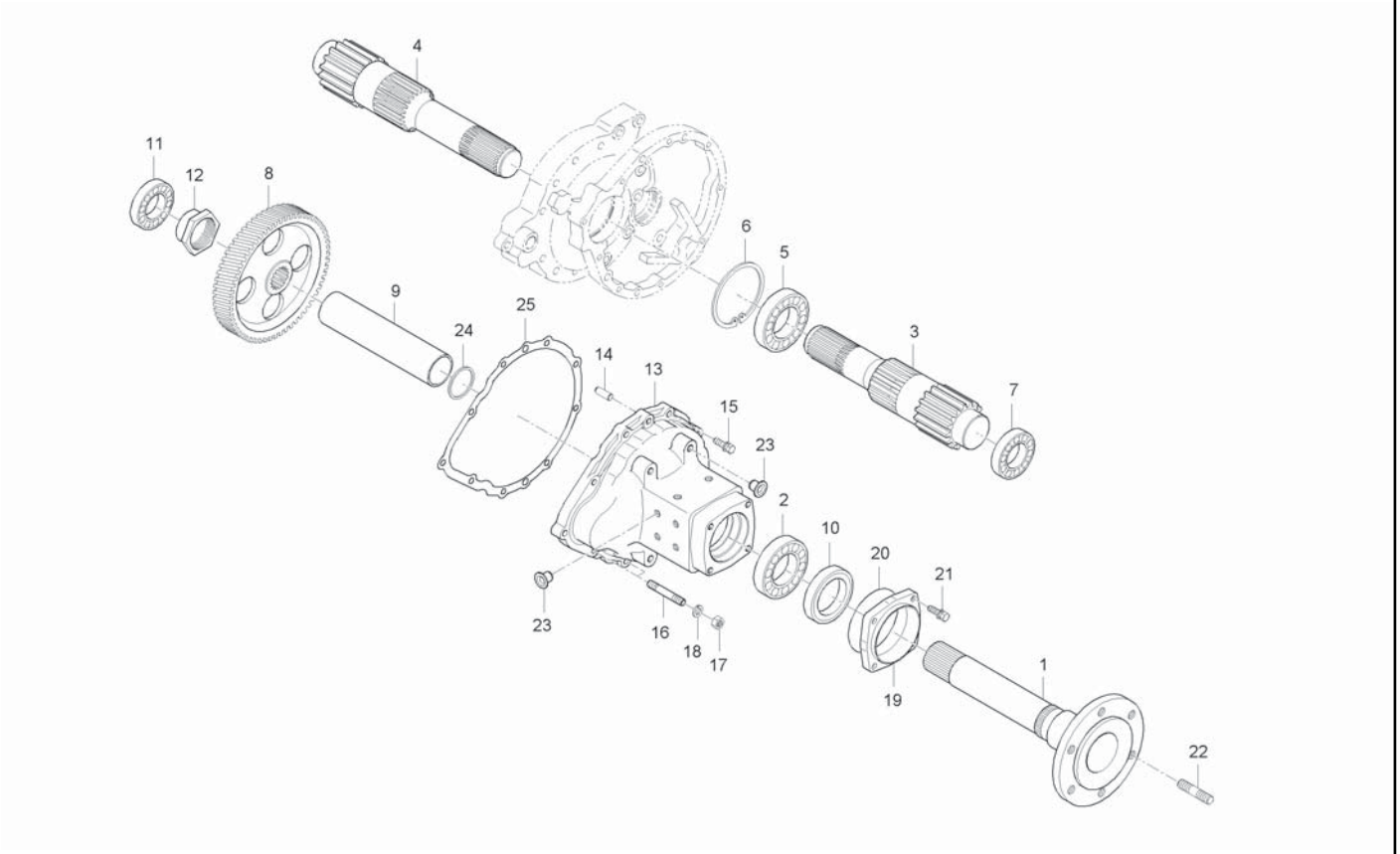

A : CK35-EU , B : CK35H-EU

No.	Part Number	Desciption	Q'TY A	Q'TY B	Q'TY C	Q'TY D	Q'TY E	I.C	Remark
1	T2185-27112	AXLE, RR	2	2					
2	08101-06210	BALL BEARING	2	2					#6210
3	T2185-26721	SHAFT, GEAR 10 LH	1	1					
4	T2185-26712	SHAFT, GEAR 10 RH	1	1					
5	08101-06209	BEARING, BALL	2	2					#6209
6	04611-00850	SNAP RING	2	2					
7	08101-06207	BALL BEARING	2	2					#6207
8	T2185-26831	GEAR, 55	2	2					
9	T2185-27141	SPACER	2 ~GT8100044						
9	T2185-27142	SPACER	2 GT8100045~	2				<-X->	
10	36205-4825-2	SEAL, OIL	2	2					
11	38260-2216-1	BEARING,BALL	2	2					
12	T2185-27201	NUT, REAR AXLE	2	2					
12	T2185-27202	NUT, REAR AXLE	2	2				<--->	
13	T2185-27312	CASE, REAR AXLE	2	2					
14	37305-2817-1	PIN, PARALLEL	4	4					
15	01133-51035	BOLT, WASHER	14	14					M10X1.25
16	T2440-14201	STUD	4	4					
16	01517-51035	STUD	4	4				<--->	

----> Old replace New
<-X-> Not interchangeable
<-O-> Interchangeable with another part(s)
<---- New replace Old
<---> Interchangeable

CK30M-T480A

REAR AXLE GROUP

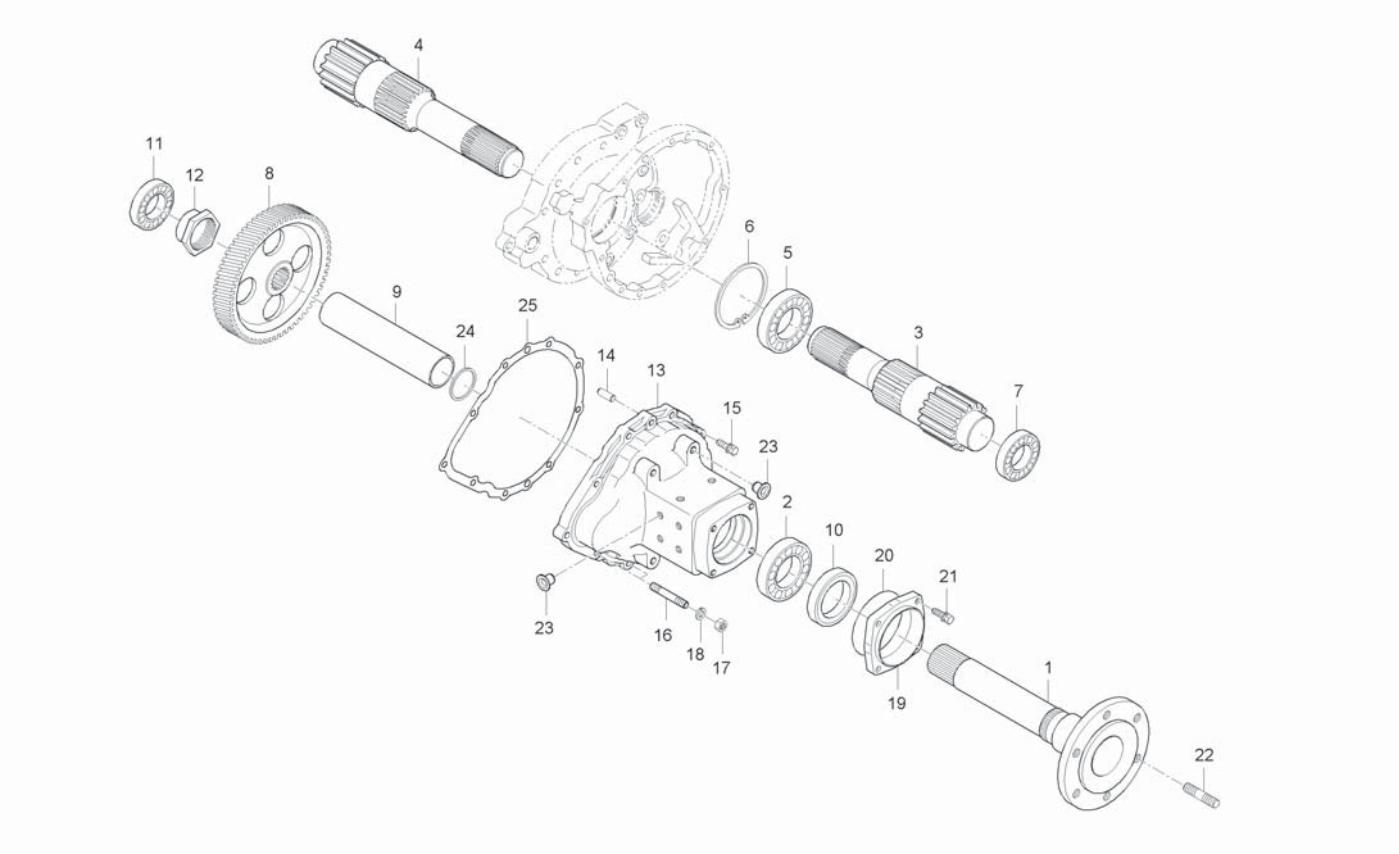

A : CK35-EU , B : CK35H-EU

No.	Part Number	Desciption	Q'TY A	Q'TY B	Q'TY C	Q'TY D	Q'TY E	I.C	Remark
17	02176-50100	NUT	4	4					M10X1.25
18	04512-50100	WASHER, SPRING	4	4					M10
19	38435-2716-1	COVER, SHAFT CASE RR	2	2					
19	T4340-27161	COVER, BEARING	1	1				<----	
20	04811-51000	O RING	2	2					
21	01133-51035	BOLT, WASHER	8	8					M10X1.25
22	T4340-27121	STUD	4	4					
22	T4340-27122	STUD	4 ~HT8100028	4 ~HT8900056				<----	
22	01517-51632	STUD	4 HT8100029~	4 HT8900057~				<-0->	M16*1.5*32
23	32210-2758-1	PLUG	20	20					
24	32155-2648-1	COLLAR	2	2					
25	T2440-27353	PACKING	2	2					

----> Old replace New
<-X-> Not interchangeable
<-0-> Interchangeable with another part(s)
<---- New replace Old
<---> Interchangeable

1-30HE-T1055A MID PTO GROUP

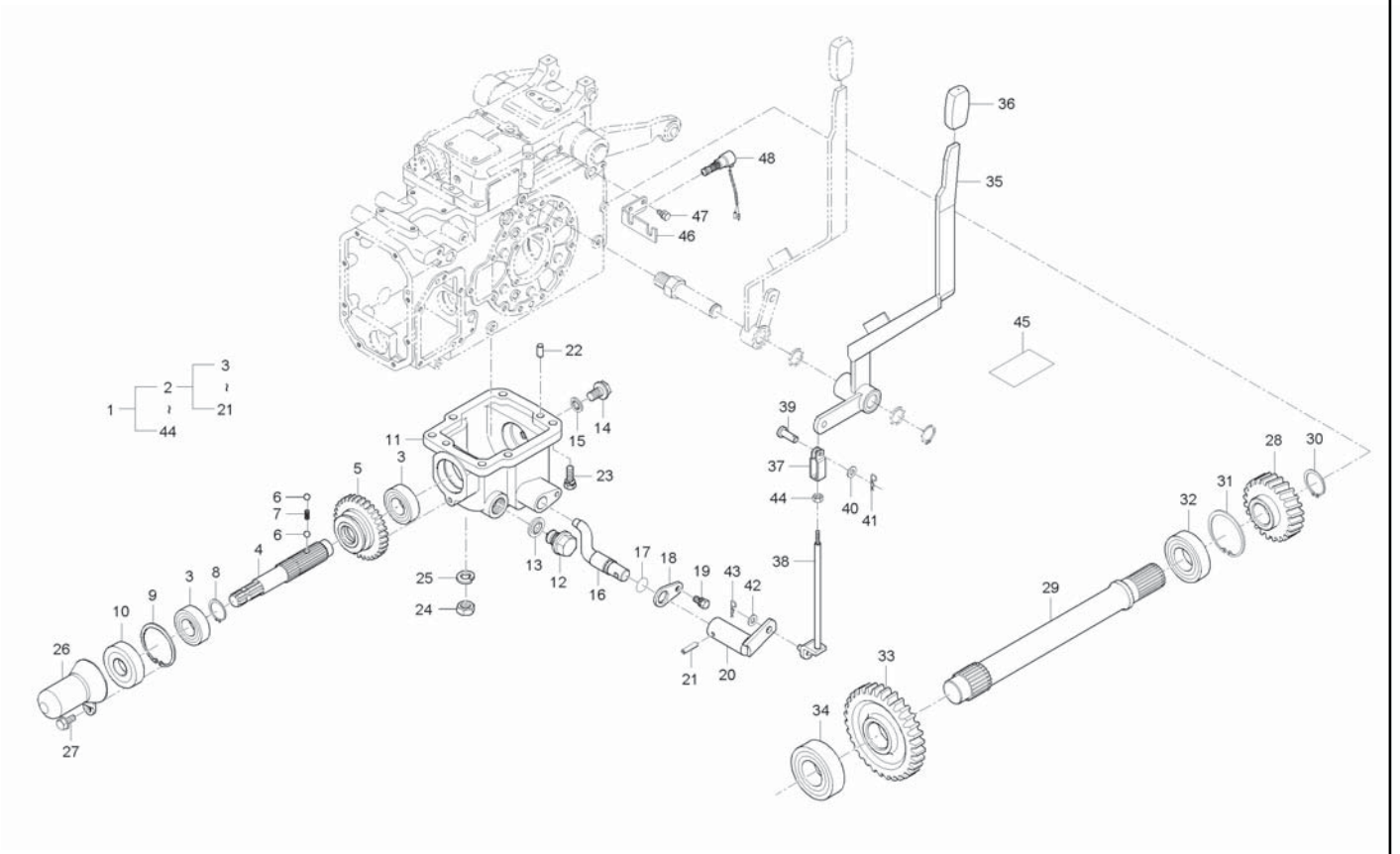

A : CK35-EU , B : CK35H-EU

No.	Part Number	Desciption	Q'TY A	Q'TY B	Q'TY C	Q'TY D	Q'TY E	I.C	Remark
1	T2195-A74000101	ASS'Y, MID PTO	1	1					
1	T2195-A74000102	ASS'Y, MID PTO	1	1				<--->	
2	T2185-24104	PTO ASSY, MID	1	1					
3	08101-06205	BALL BEARING	2	2					DIA25
4	T2185-24122	SHAFT, PTO MID	1	1					
5	T2185-24161	GEAR, 32 MID PTO	1	1					
6	07715-01605	STEEL BALL	2	2					5/16"
7	T2440-44251	SPRING	1	1					
8	04612-00300	SNAP RING	1	1					
9	04611-00520	SNAP RING	1	1					
10	09502-55210	OIL SEAL	1	1					
11	T2185-24114	CASE, PTO MID	1	1					
12	06331-35012	PLUG	1	1					M12*P1.25
13	04717-01200	WASHER, SEAL	1	1					
14	T4125-14261	PLUG, MAGNET	1	1					
15	04717-02650	WASHER, SEAL	1	1					
16	T2185-24232	ARM, SHIFT PTO MID	1	1					
17	04811-00150	O RING	1	1					
18	31355-4433-1	STOPPER	1	1					

----> Old replace New
<-X-> Not interchangeable
<-O-> Interchangeable with another part(s)
<---- New replace Old
<---> Interchangeable

1-30HE-T1055A

MID PTO GROUP

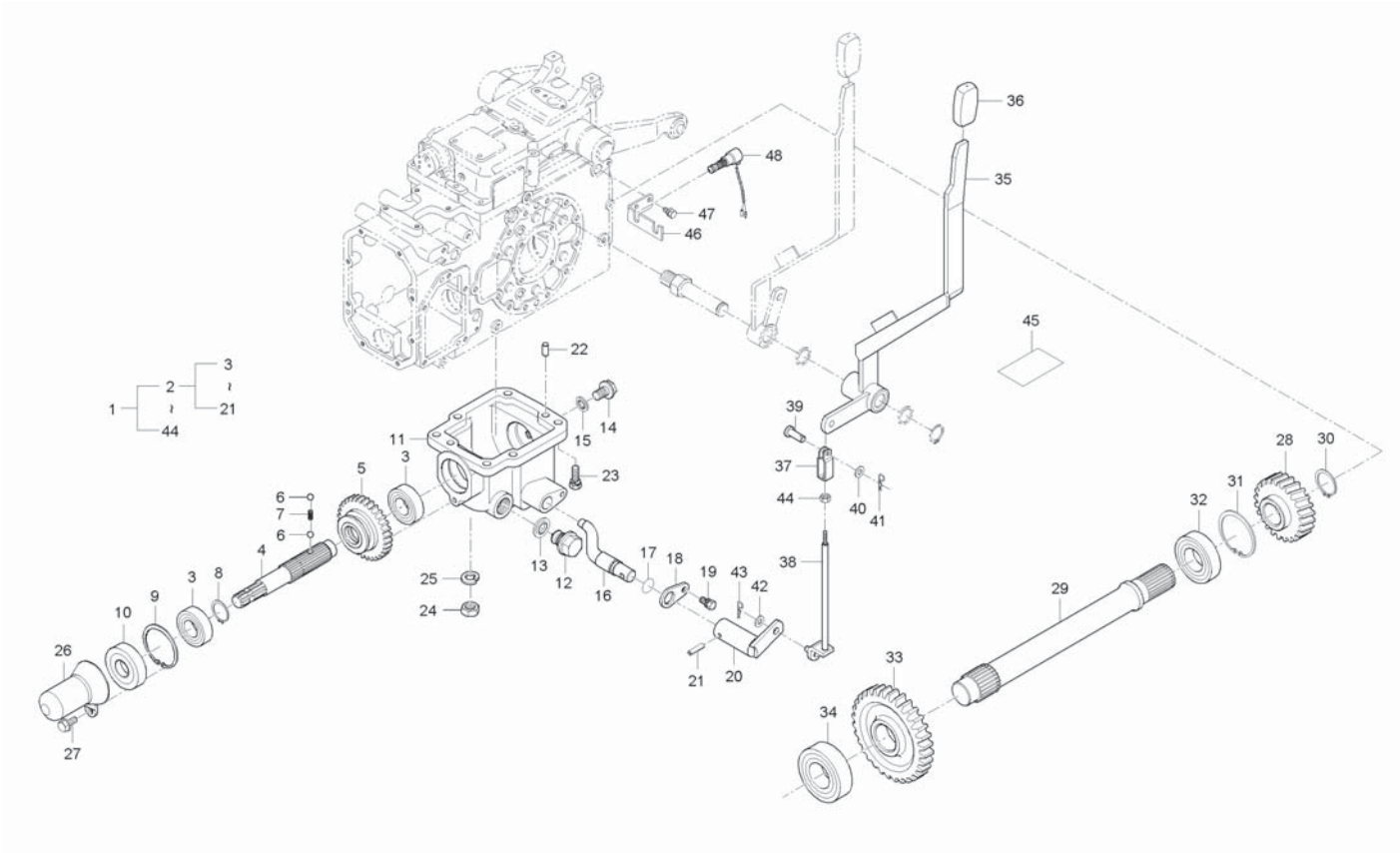

A : CK35-EU , B : CK35H-EU

No.	Part Number	Desciption	Q'TY A	Q'TY B	Q'TY C	Q'TY D	Q'TY E	I.C	Remark
19	01123-50816	BOLT, WASHER	1	1					M8*P1.25
20	T2185-24525	LEVER 1, MID PTO	1	1					
21	05411-00630	PIN, SPRING	1	1					DIA6*30
22	05012-01018	PIN, PARALLEL	2	2					
23	01133-51030	BOLT, WASHER	4	4					M10*1.25
24	02176-50100	NUT	2	2					M10X1.25
25	04512-50100	WASHER, SPRING	2	2					M10
26	T4125-24171	LEVER, MID PTO SHAFT	1	1					
27	01754-50816	BOLT, FLANGE	1	1					M8*P1.25
28	T2185-24131	GEAR, 23 MID PTO	1	1					
29	T2185-24142	SHAFT, COUNTER MID PTO	1	1					
30	04612-00250	SNAP RING	1	1					
31	04611-00620	RING, STOPPER	1	1					
32	08101-06305	BALL BEARING	1	1					DIA25
33	T2185-24152	GEAR, 31 MID PTO	1	1					
34	08101-06006	BALL BEARING	1	1					#6006
35	T2181-24271	LEVER, MID PTO	1	1					
36	T2350-24251	GRIP B, MID PTO	1	1					
37	54516-3213-1	HOLDER PLATE, ROD	1	1					

----> Old replace New
<-X-> Not interchangeable
<-O-> Interchangeable with another part(s)
<---- New replace Old
<---> Interchangeable

1-30HE-T1055A MID PTO GROUP

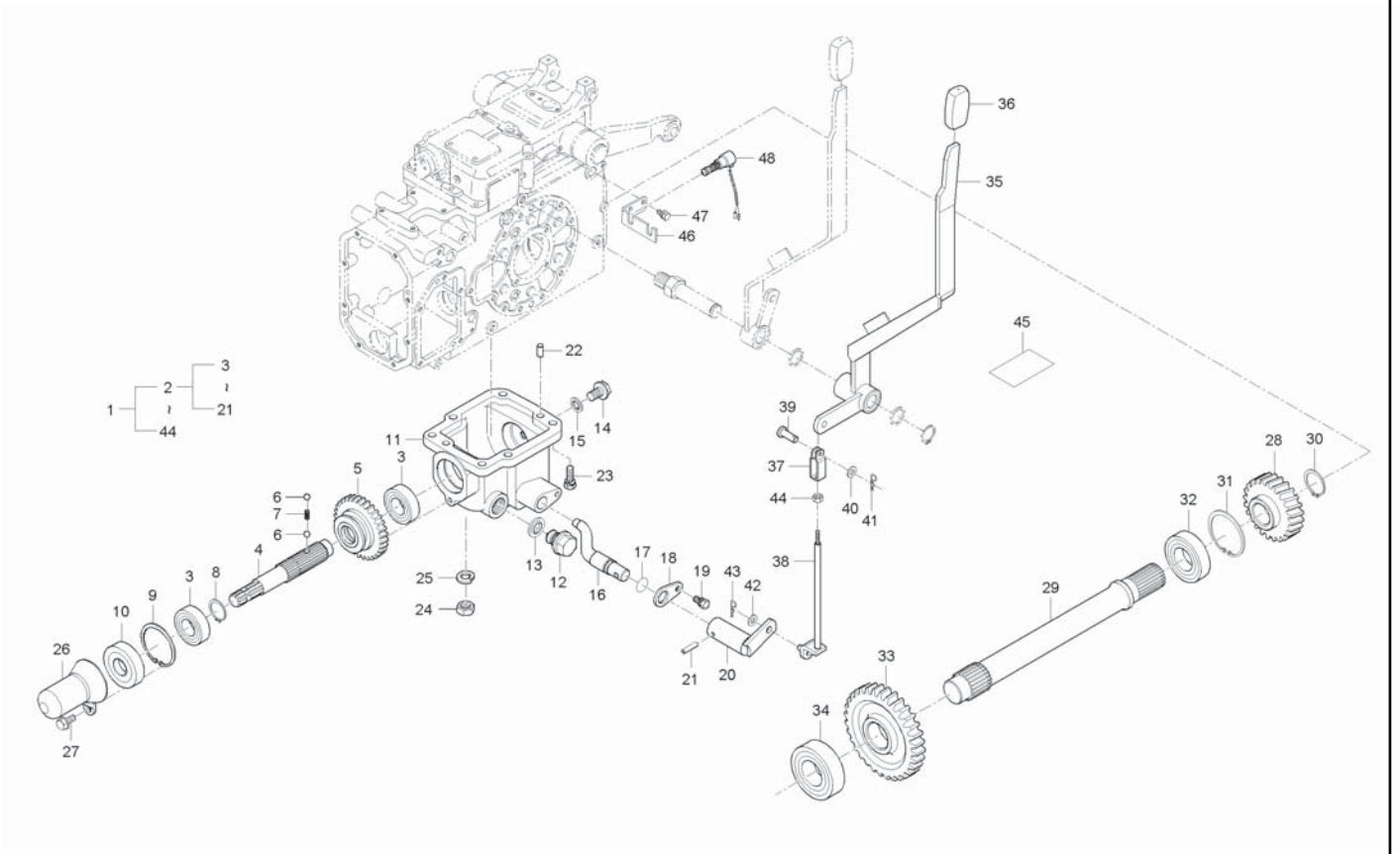

A : CK35-EU , B : CK35H-EU

No.	Part Number	Desciption	Q'TY A	Q'TY B	Q'TY C	Q'TY D	Q'TY E	I.C	Remark
38	T2185-24562	ROD, CONNECTING PTO MID	1	1					
39	05122-50822	JOINT PIN	1	1					
40	04012-50080	WASHER, PLAIN	1	1					DIA18*T1.2
41	05525-50800	PIN, SNAP	1	1					
42	04012-50100	WASHER, PLAIN	1	1					
43	05525-51000	PIN, SNAP	1	1					
44	02114-50100	NUT	1	1					M10*P1.5
45	T2185-53193	LABEL, MID PTO	1	1					
46	T2198-33661	BRACKET, SWITCH	1	1					
47	01123-50814	BOLT, WASHER	2	2					M8*P1.25
48	T2198-69511	SAFETY STARTER SWITCH ASSY	1	1					
48	T4257-67511	LIMIT SWITCH ASSAY, NO	1	1				<--->	

----> Old replace New
<-X-> Not interchangeable
<-O-> Interchangeable with another part(s)
<---- New replace Old
<---> Interchangeable

CK35H-T350A

ASSY,HST GROUP

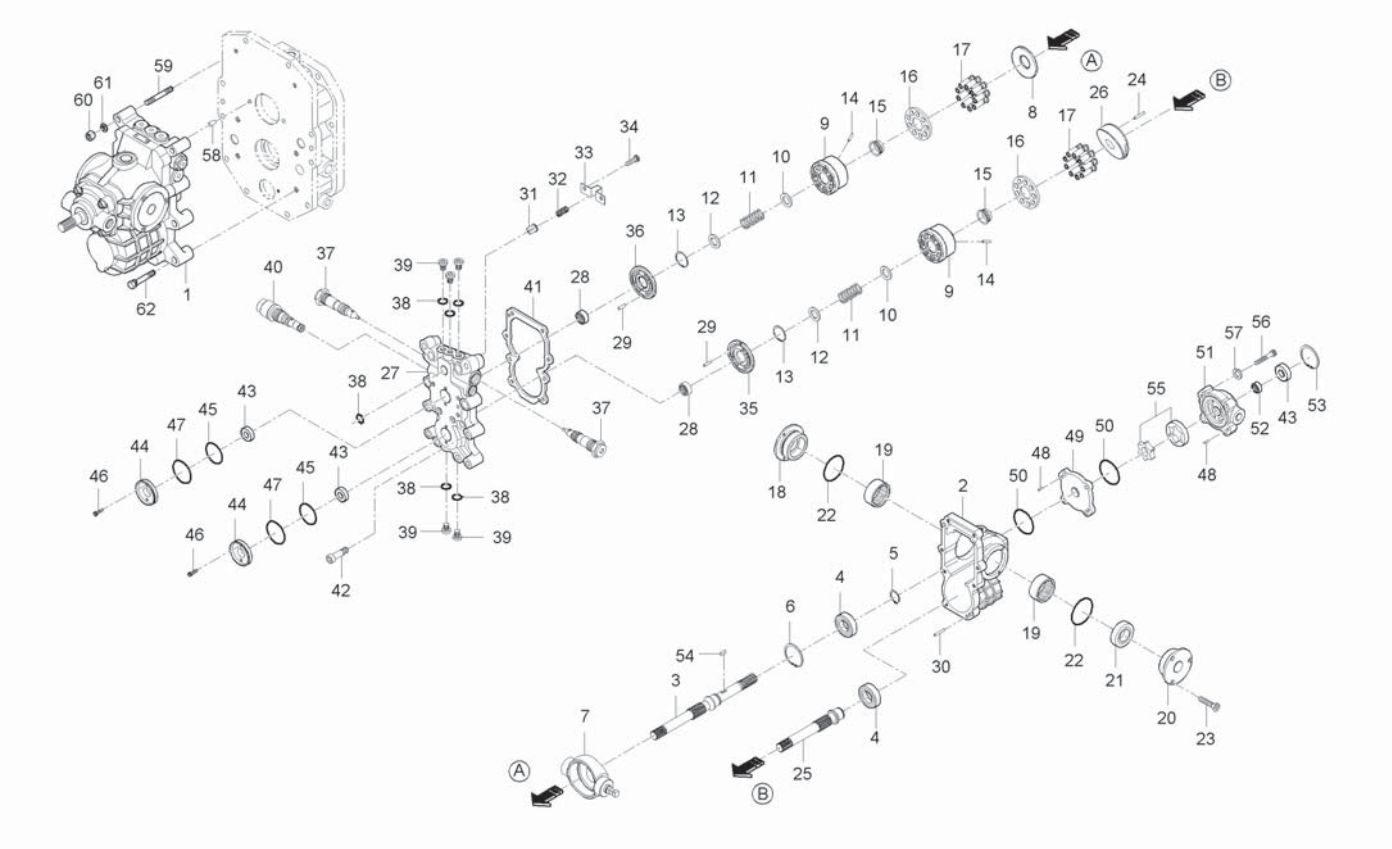

A : CK35-EU , B : CK35H-EU

No.	Part Number	Desciption	Q'TY A	Q'TY B	Q'TY C	Q'TY D	Q'TY E	I.C	Remark
1	T2155-30011	HST ASSY		1					
1	T2155-30012	HST ASSY		1				<--->	
2	JA1C2001	BODY		1					
3	JA5G3001	SHAFT PRANTING PIWR		1					
4	BB6305	BALL BEARING		2					
5	SR25CS	SNAP RING		1					
6	SR62CH	SNAP RING		1					
7	JA5G3002	SWASH PLATE		1					
8	JA4C2005	SHOE PLATE		1					
9	JA5G3003	CYLINDER BLOCK		2					
10	JA5G3004	SEAT,SPRING		2					
11	JA5G3005	SPRING		2					
12	JA5G3006	SEAT,SPRING		2					
13	SR28CH	SNAP RING		2					
14	JA4C2010	PIN		6					
15	JA4C2011	BALL GUIDE		2					
16	JA5G3007	FIXED PLATE		2					
17	JA5G3008	ASS'Y PISTON		18					
18	J93E2008	COVER, B		1					

----> Old replace New
<-X-> Not interchangeable
<-O-> Interchangeable with another part(s)
<---- New replace Old
<---> Interchangeable

CK35H-T350A

ASSY,HST GROUP

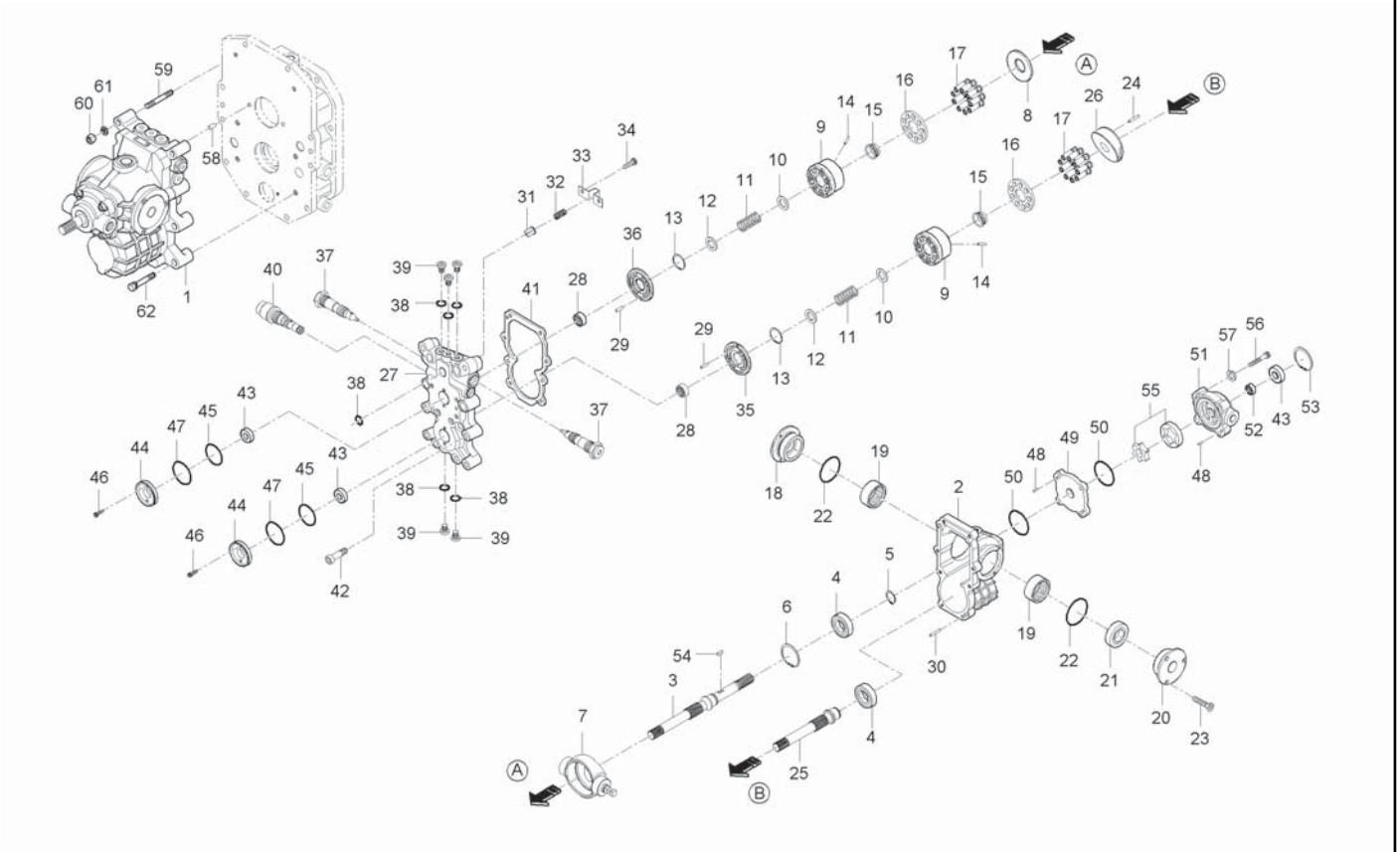

A : CK35-EU , B : CK35H-EU

No.	Part Number	Desciption	Q'TY A	Q'TY B	Q'TY C	Q'TY D	Q'TY E	I.C	Remark
19	DX505515	BEARING, DX		2					
20	J93E2009	COVER, A		1					
21	OSAP1314	SEAL, OIL		1					
22	GO065	O RING		2					
23	SFM0616	BOLT		6					
24	P20000P1	PIN		1					
25	JA5G3009	SHAFT(MOTOR)		1					
26	JA4C2015	SWASH PLATE(MOTOR)		1					
27	JA5G3010	COVER, FRONT		1					
27	JA5G3010A	COVER,FRONT		1				<--->	
28	NBRLM2020	NEEDLE BEARING		2					
29	P10000P4	PIN		2					
30	P10000P3	PIN		2					
31	J93E2014	CHECK		1					
32	J93E2015	SPRING		1					
33	J93E2016	HOLDER, SPRING		1					
34	WBM0610	BOLT, LENCH		2					
35	JA4C2018	VALVE PLATE(MOTOR)		1					
35	JA5G3011	VALVE PLATE(MOTOR)		1				<--->	

----> Old replace New
<-X-> Not interchangeable
<-O-> Interchangeable with another part(s)
<---- New replace Old
<---> Interchangeable

CK35H-T350A

ASSY,HST GROUP

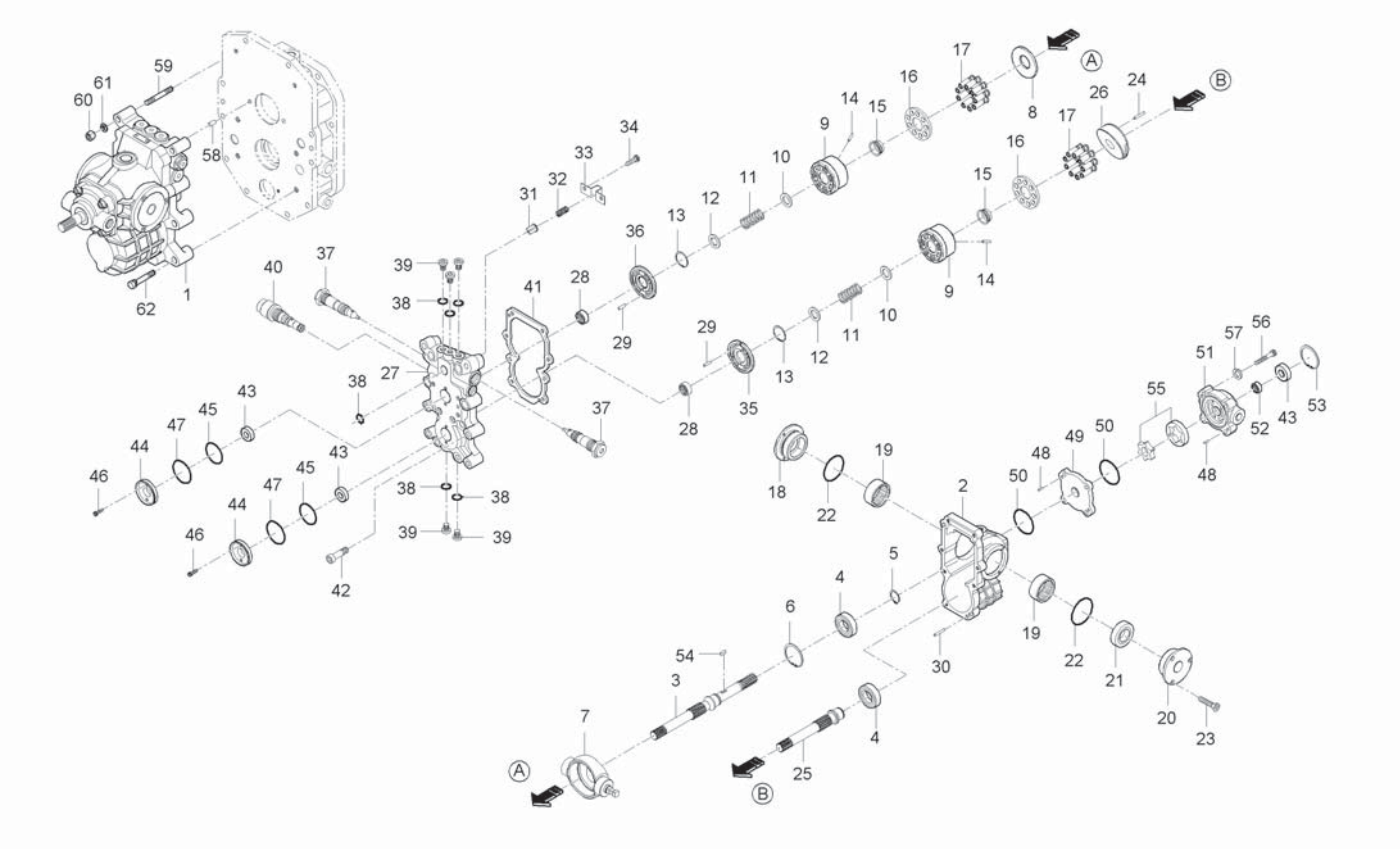

A : CK35-EU , B : CK35H-EU

No.	Part Number	Desciption	Q'TY A	Q'TY B	Q'TY C	Q'TY D	Q'TY E	I.C	Remark
36	JA4C2019	VALVE PLATE(P/P)		1					
36	JA5G3012	VALVE PLATE(P/P)		1				<--->	
37	JA1C2012	URAL VALVE NET ASSY		2					
38	PO014	O RING		6					
39	MS50D110	PLUG		5					
40	J93E2021	RELIFE VALVE ASSY		1					
41	JA1C2008A	GASKET		1					
42	WBM1045	BOLT, LENCH		8					
43	OSAP1013	SEAL, OIL		3					
44	J93E2022	COVER, C		2					
45	AO034	O RING		2					
46	WBM0515	BOLT, LENCH		4					
47	AO035	O RING		2					
48	P10000P6	PIN		2					
49	JA1C1013	PLATE		1					
50	AO149	O RING		2					
51	JA1C2009A	CASHING		1					
52	NBRLM2015	NEEDLE BEARING		1					
53	SR35CH	SNAP RING		1					

----> Old replace New
<-X-> Not interchangeable
<-O-> Interchangeable with another part(s)
<---- New replace Old
<---> Interchangeable

CK35H-T350A

ASSY,HST GROUP

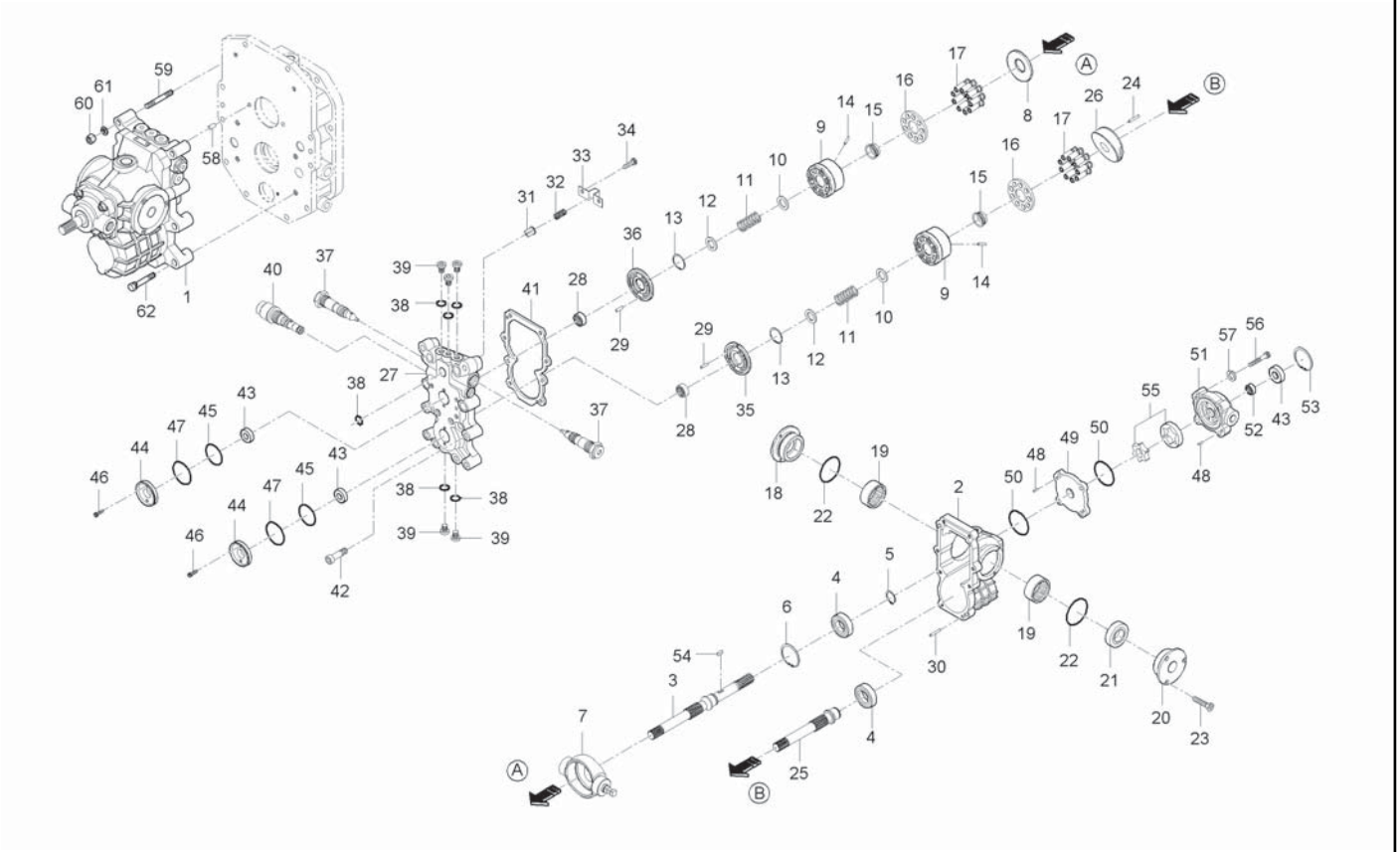

A : CK35-EU , B : CK35H-EU

No.	Part Number	Desciption	Q'TY A	Q'TY B	Q'TY C	Q'TY D	Q'TY E	I.C	Remark
54	K050508	KEY		1					
55	JA1C2010A	GEROTOR		1					
56	WBM0840	BOLT, LENCH		4					
57	WAS08	WASHER, SPRING		4					
58	05012-00818	PIN, PARALLEL		2					
59	01517-51055	STUD		2					M10X1.25
60	02176-50100	NUT		2					M10X1.25
61	04512-50100	WASHER, SPRING		2					M10
62	01133-51260	BOLT, WASHER		4					M12*1.25

----> Old replace New
<-X-> Not interchangeable
<-O-> Interchangeable with another part(s)

<---- New replace Old
<---> Interchangeable

CK35HE-T350A

ASSY,HST GROUP

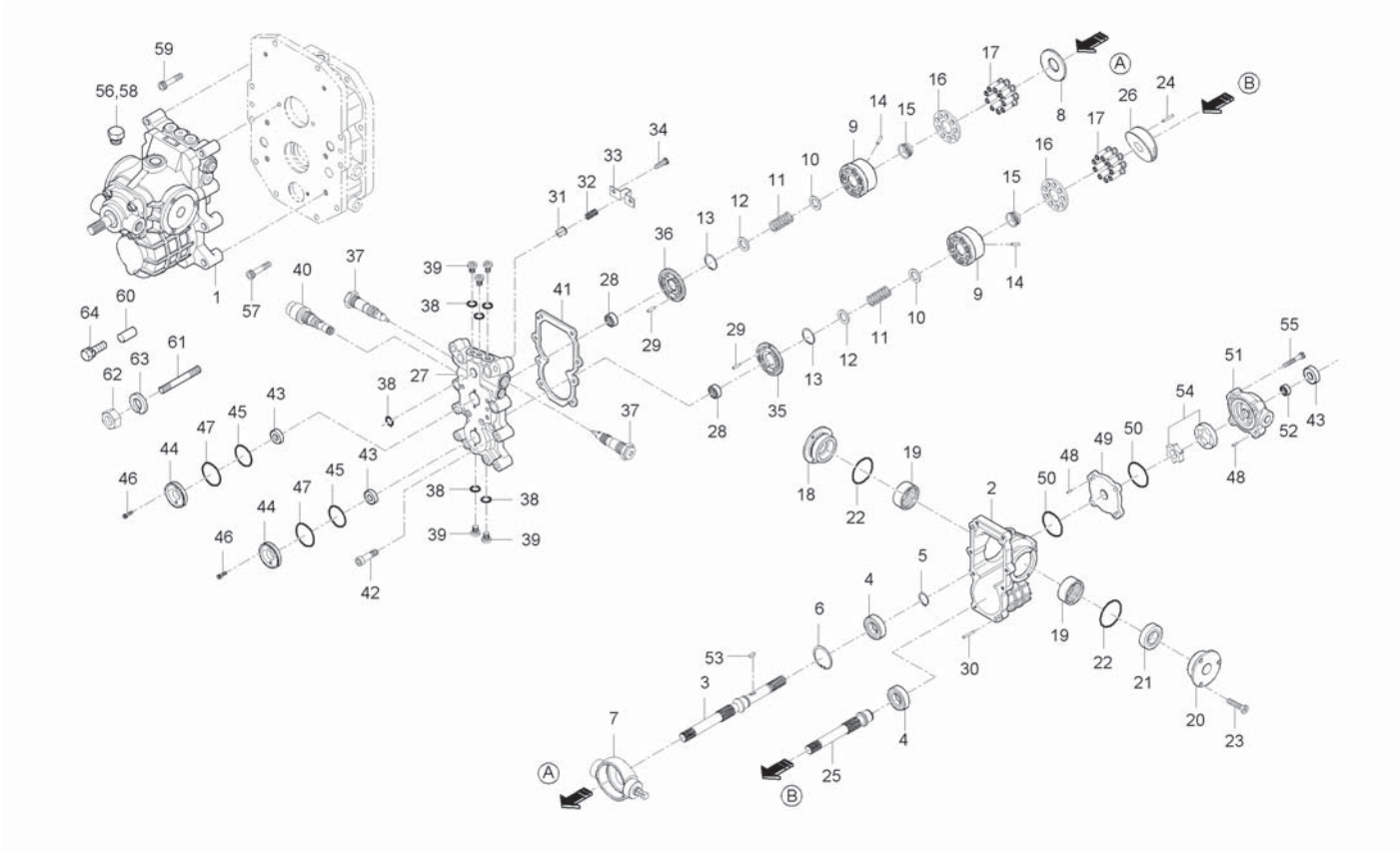

A : CK35-EU , B : CK35H-EU

No.	Part Number	Desciption	Q'TY A	Q'TY B	Q'TY C	Q'TY D	Q'TY E	I.C	Remark
1	T2155-31001	HST ASSEMBLY		1					
1	T2155-31002	HST ASSEMBLY		1				<--->	
2	100010	CASE,HST		1					
3	100011	SHAFT		1					
4	300010	BALL BEARING		2					
5	200010	RING, SNAP		1					
6	200011	RING, SNAP		1					
7	100012	SWASH PLATE(MOTOR)		1					
8	100013	SHOE PLATE		2					
9	100014	CYLINDER BLOCK		2					
10	100015	SEAT,SPRING		2					
11	100016H	FRICTION SPRING		1					
12	100017	SEAT,SPRING		2					
13	200018	RING, SNAP		3					
14	100018	PIN		6					
15	100019	BALL GUIDE		2					
16	100020	RETAINER		2					
17	700010	ASS'Y PISTON		18					
18	100023	COVER(B)		1					

----> Old replace New
<-X-> Not interchangeable
<-O-> Interchangeable with another part(s)
<---- New replace Old
<---> Interchangeable

CK35HE-T350A

ASSY,HST GROUP

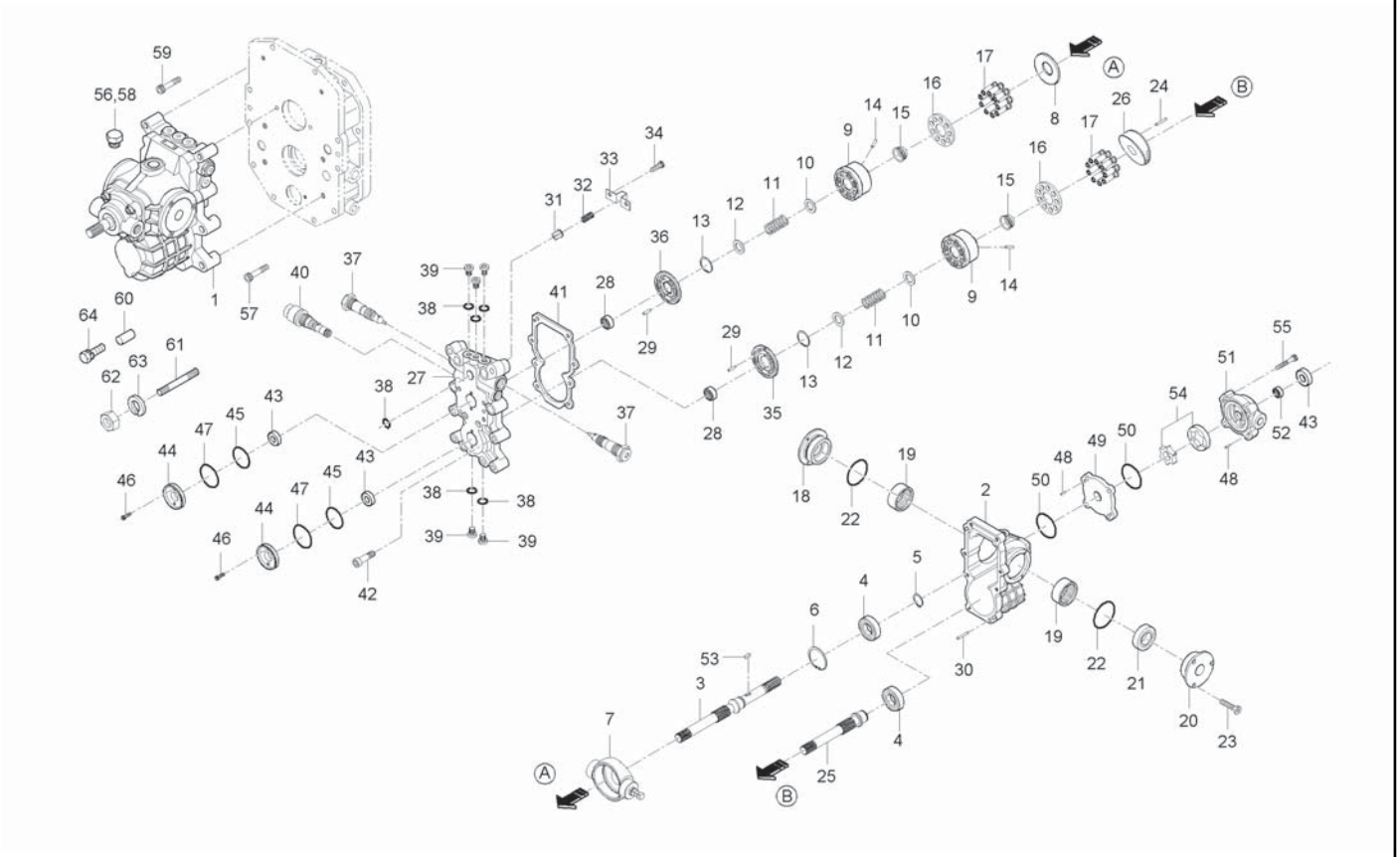

A : CK35-EU , B : CK35H-EU

No.	Part Number	Desciption	Q'TY A	Q'TY B	Q'TY C	Q'TY D	Q'TY E	I.C	Remark
19	300011	BALL BEARING		2					
20	100024	COVER(A)		1					
21	300012	OIL SEAL		1					
22	300013	O RING		2					
23	200012	LENCH BOLT		6					
24	100025	PIN		1					
25	100026	SHAFT(MOTOR)		1					
26	100027	SWASH PLATE(MOTOR)		1					
27	100028	VALVE BLOCK		1					
28	300014	BEARING, NIDDLE		2					
29	100029	PIN		2					
30	100030	PIN		2					
31	100031	CHECK		1					
32	100032	FRICTION SPRING		1					
33	100033	HOLDING, SPRING		1					
34	200015	LENCH BOLT		1					
35	100034	VALSVE PLATE M		1					
36	100035	PLATE, VALVE		1					
37	700011	NEUTRAL VALVE ASSY		1					

----> Old replace New
<-X-> Not interchangeable
<-O-> Interchangeable with another part(s)
<---- New replace Old
<---> Interchangeable

CK35HE-T350A

ASSY,HST GROUP

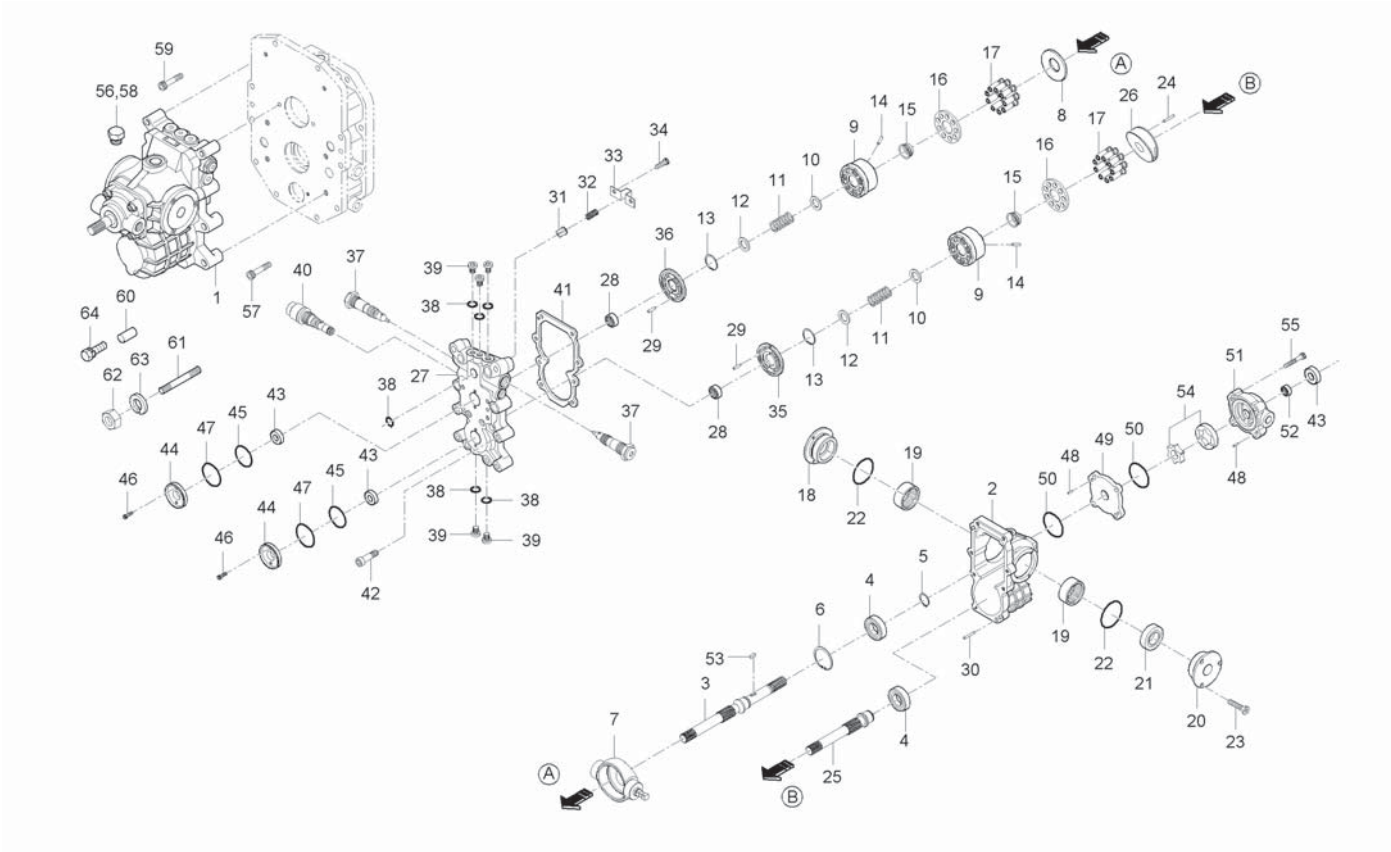

A : CK35-EU , B : CK35H-EU

No.	Part Number	Desciption	Q'TY A	Q'TY B	Q'TY C	Q'TY D	Q'TY E	I.C	Remark
38	300016	O RING		6					
39	100104	PLUG		5					
40	700012	RELIEFVALVE		1					
41	100051	GASKET		1					
42	200016	LENCH BOLT		4					
43	300024	OIL SEAL		3					
44	100052	COVER		2					
45	300025	O RING		2					
46	200017	LENCH BOLT		4					
47	300026	O RING		2					
48	100053	PIN		2					
49	100054	PLATE		1					
50	300043	O RING		2					
51	100056	CASE		1					
52	300027	BEARING, NIDDLE		1					
53	100811	KEY		1					
54	100058	GEROTOR		1					
55	200019	LENCH BOLT		4					
56	200021	PLUG		3					

----> Old replace New
<-X-> Not interchangeable
<-O-> Interchangeable with another part(s)
<---- New replace Old
<---> Interchangeable

CK35HE-T350A

ASSY,HST GROUP

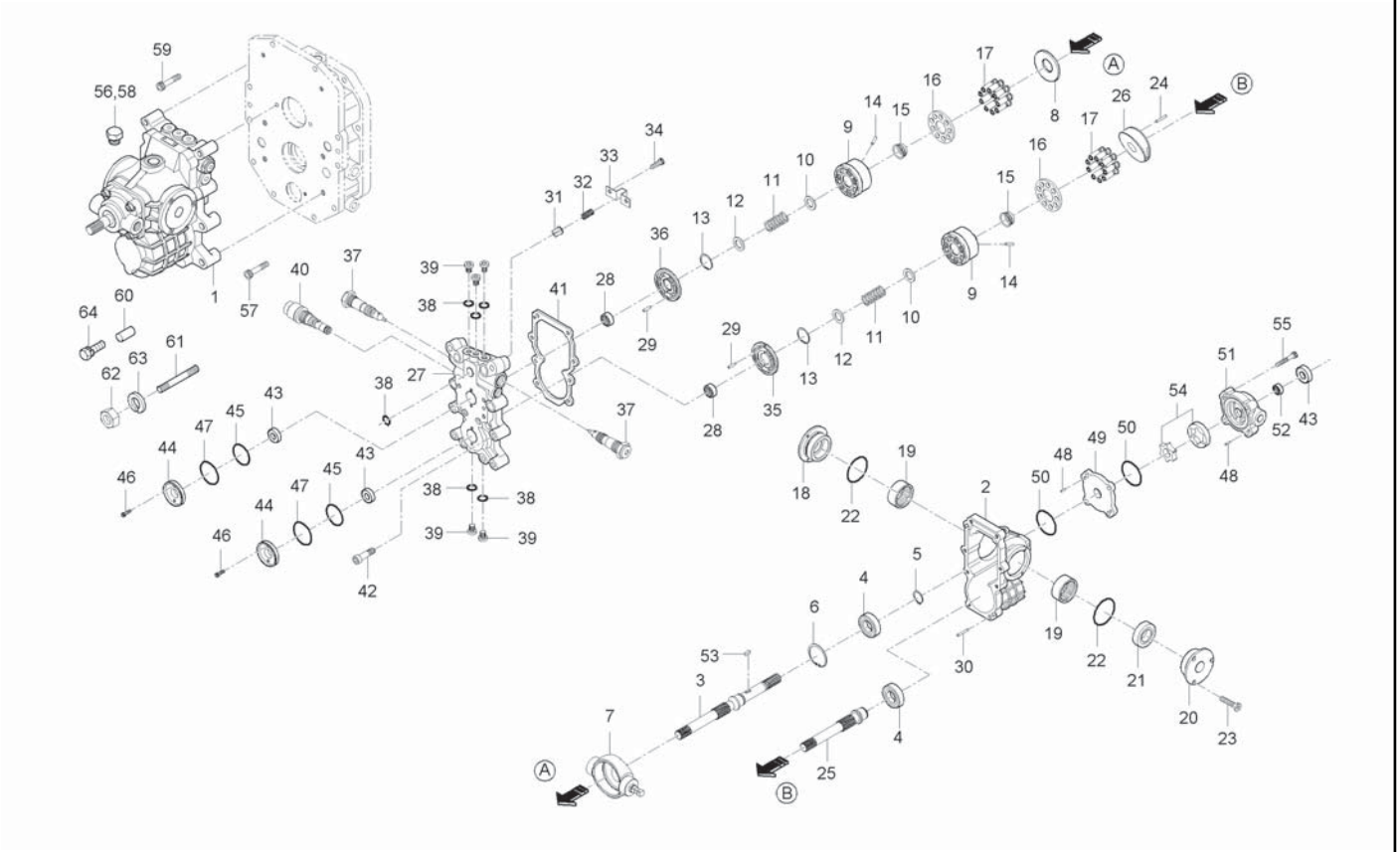

A : CK35-EU , B : CK35H-EU

No.	Part Number	Desciption	Q'TY A	Q'TY B	Q'TY C	Q'TY D	Q'TY E	I.C	Remark
57	200041	LENCH BOLT		2					
58	200040	PLUG		2					
59	200036	LENCH BOLT		2					
60	05012-00818	PIN, PARALLEL		2					
61	01517-51055	STUD		2					M10X1.25
62	02176-50100	NUT		2					M10X1.25
63	04512-50100	WASHER, SPRING		2					M10
64	01133-51260	BOLT, WASHER		4					M12*1.25

----> Old replace New
<-X-> Not interchangeable
<-O-> Interchangeable with another part(s)
<---- New replace Old
<---> Interchangeable

CK35H-T360A

HST CONTROL_1 GROUP

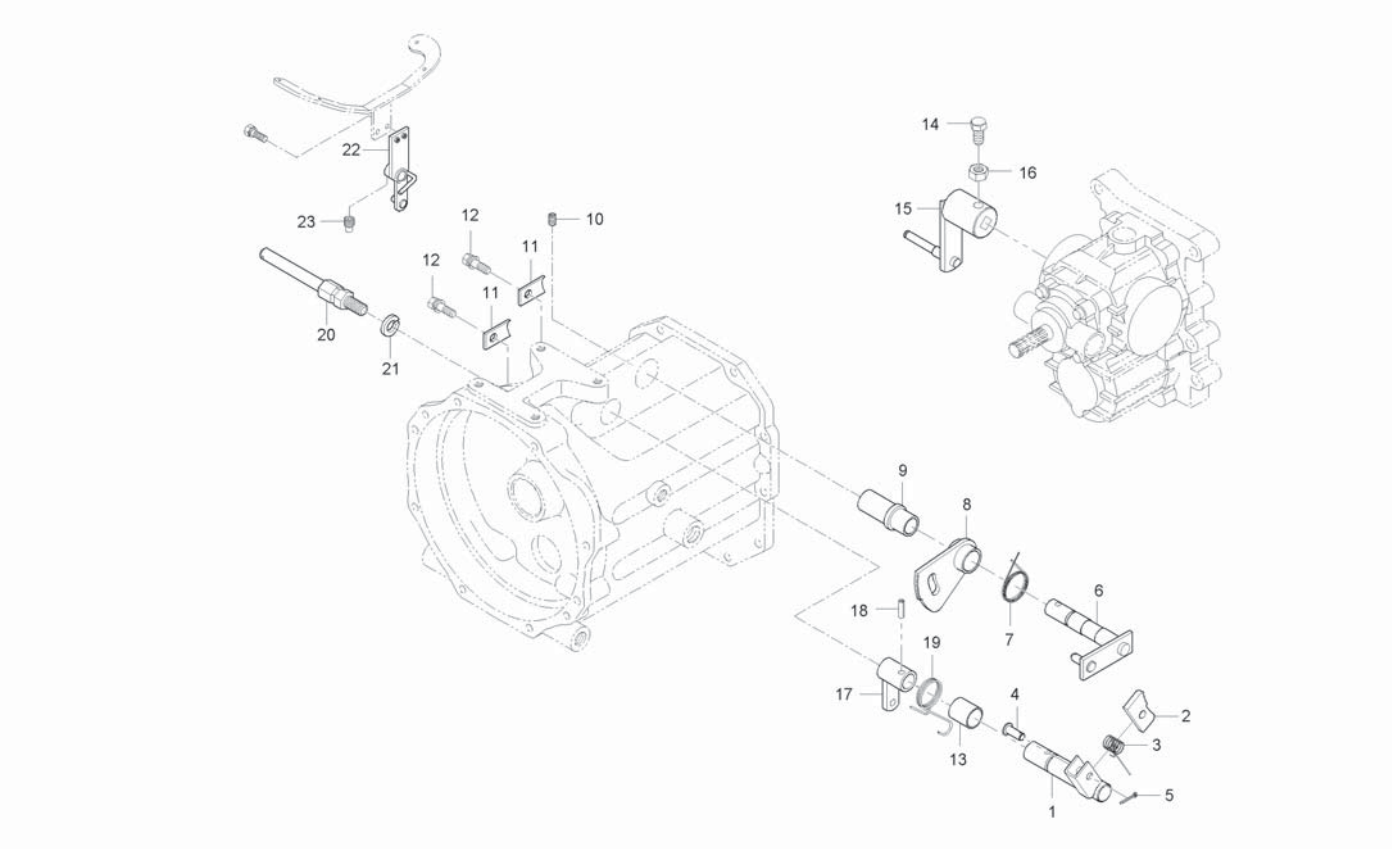

A : CK35-EU , B : CK35H-EU

No.	Part Number	Desciption	Q'TY A	Q'TY B	Q'TY C	Q'TY D	Q'TY E	I.C	Remark
1	T2195-32222	SHAFT, FIXING		1					
2	T2368-32252	GEAR, LOCK		1					
3	T2368-32191	SPRING, CRUISE		1					
4	05122-50825	JOINT PIN		1					
5	05511-50215	PIN, SPLIT		1					
6	T2368-32151	LEVER 4, CONNECTOR		1					
7	T2360-32251	SPRING, 1		1					
8	T2368-32262	GEAR, SECTOR		1					
9	T2368-32161	SPACER		1					
10	T2368-32171	BOLT, LENCH		1					
11	T2360-32182	PLATE, FIXED		2					
12	01123-50816	BOLT, WASHER		2					M8*P1.25
13	08511-02030	BUSH		1					
14	T2195-32111	BOLT, HST LEVER FIXING		1					
15	T2195-32121	JOINT		1					
16	02176-50100	NUT		1					M10X1.25
17	T2195-32232	LEVER, CONNECTOR		1					
18	05411-00632	PIN, SPRING		1					DIA6*32
19	T2360-32353	SPRING, 2		1					

----> Old replace New
<-X-> Not interchangeable
<-O-> Interchangeable with another part(s)
<---- New replace Old
<---> Interchangeable

CK35H-T360A

HST CONTROL_1 GROUP

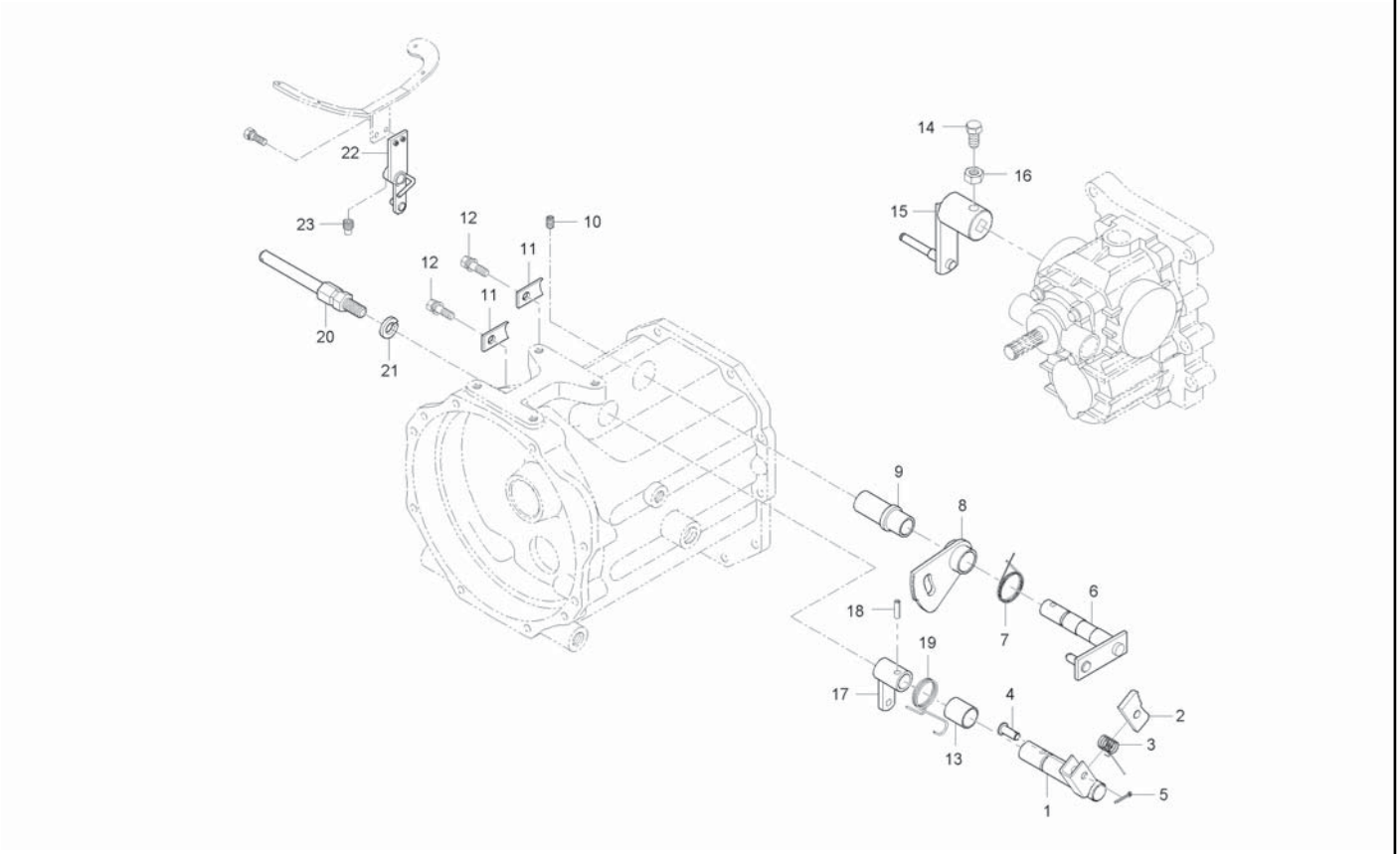

A : CK35-EU , B : CK35H-EU

No.	Part Number	Desciption	Q'TY A	Q'TY B	Q'TY C	Q'TY D	Q'TY E	I.C	Remark
20	T2195-32241	SHAFT		1					
21	04512-50080	SPRING WASHER		1					M08
22	T2198-31131	HOLDER, PEDAL		1					
23	T2610-39572	SCREW, HOLDER		1					

----> Old replace New
<-X-> Not interchangeable
<-O-> Interchangeable with another part(s)
<---- New replace Old
<---> Interchangeable

CT230-T360A

HST CONTROL 1 GROUP

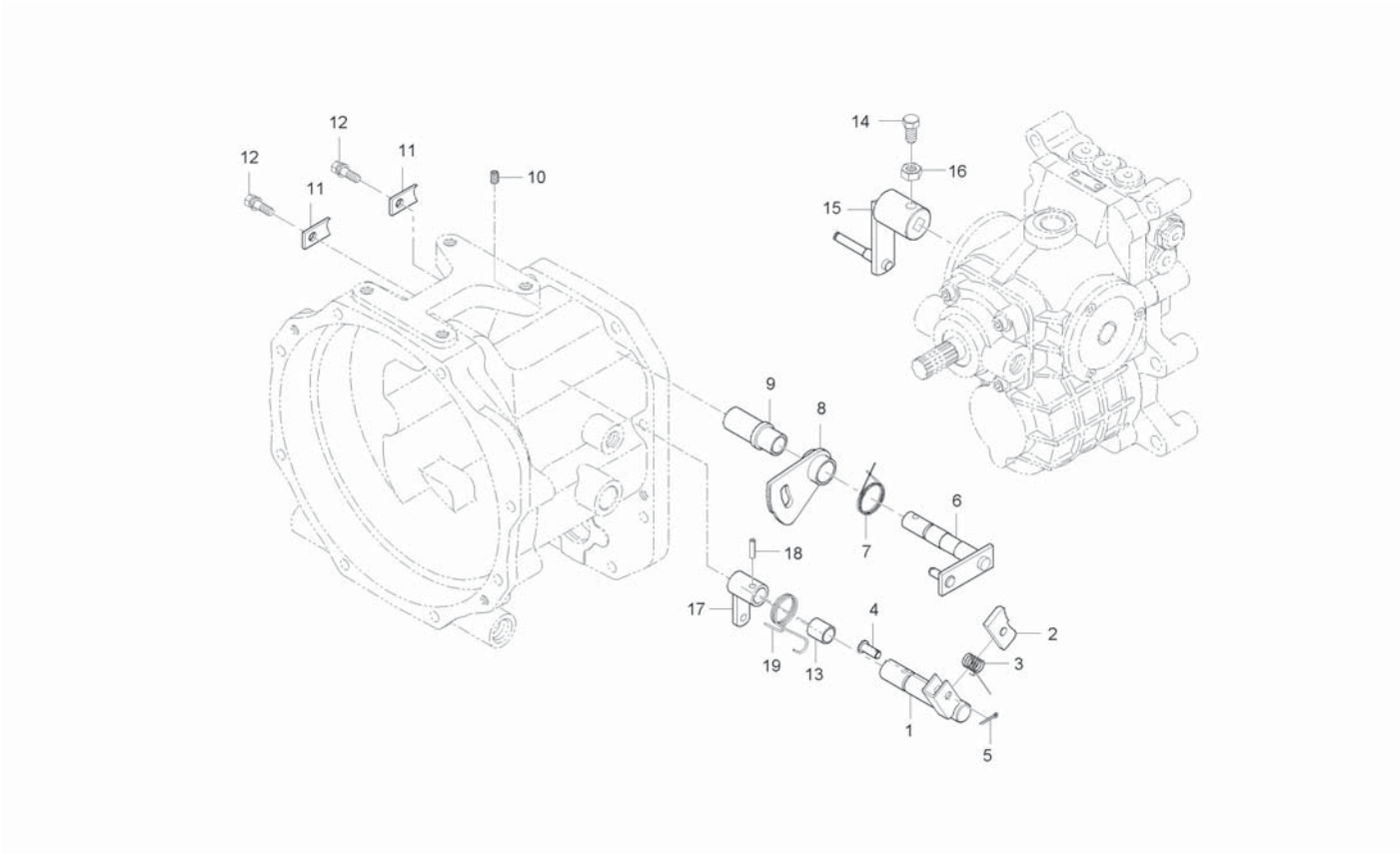

A : CK35-EU , B : CK35H-EU

No.	Part Number	Desciption	Q'TY A	Q'TY B	Q'TY C	Q'TY D	Q'TY E	I.C	Remark
1	T2195-32222	SHAFT, FIXING		1					
2	T2368-32251	GEAR, LOCK		1					
2	T2368-32252	GEAR, LOCK		1				<----	
3	T2368-32191	SPRING, CRUISE		1					
4	05122-50825	JOINT PIN		1					
5	05511-50215	PIN, SPLIT		1					
6	T2368-32151	LEVER 4, CONNECTOR		1					
7	T2360-32251	SPRING, 1		1					
8	T2368-32261	GEAR, SECTOR		1					
8	T2368-32262	GEAR, SECTOR		1				<----	
9	T2368-32161	SPACER		1					
10	T2368-32171	BOLT, LENCH		1					
11	T2360-32182	PLATE, FIXED		2					
12	01123-50816	BOLT, WASHER		2					M8*P1.25
13	08511-02030	BUSH		1					
14	T2195-32111	BOLT, HST LEVER FIXING		1					
15	T2195-32121	JOINT		1					
16	02116-50100	NUT		1					M10*P1.25
16	02176-50100	NUT		1				<--->	M10X1.25

----> Old replace New
<-X-> Not interchangeable
<-O-> Interchangeable with another part(s)
<---- New replace Old
<---> Interchangeable

CT230-T360A

HST CONTROL 1 GROUP

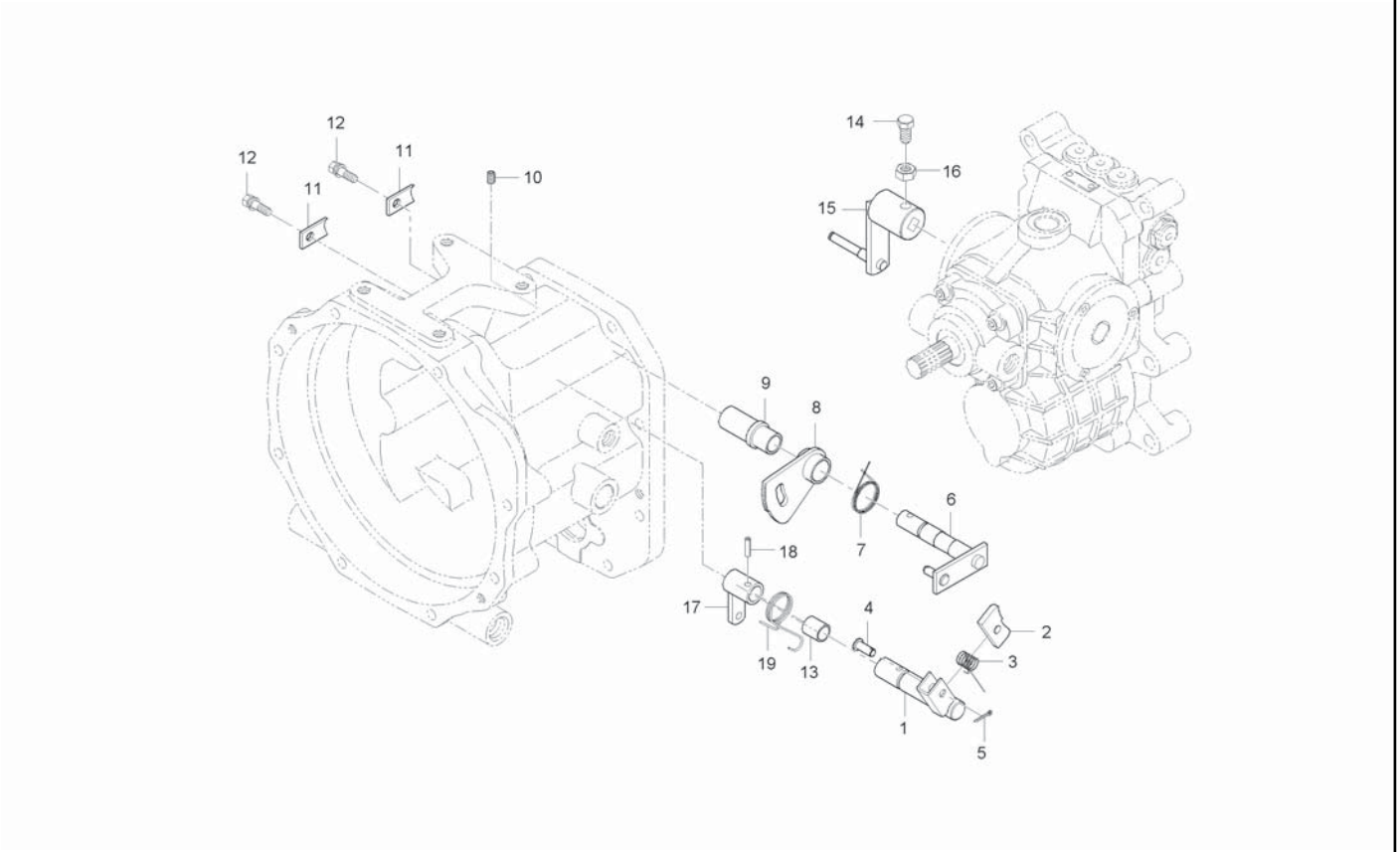

A : CK35-EU , B : CK35H-EU

No.	Part Number	Desciption	Q'TY A	Q'TY B	Q'TY C	Q'TY D	Q'TY E	I.C	Remark
17	T2195-32232	LEVER, CONNECTOR		1					
18	05411-00635	PIN, SPRING		1					DIA5*36
19	T2360-32353	SPRING, 2		1					

----> Old replace New
<-X-> Not interchangeable
<-O-> Interchangeable with another part(s)
<---- New replace Old
<---> Interchangeable

CK30H-T370A

HST IN HYDRAULIC LINE GROUP

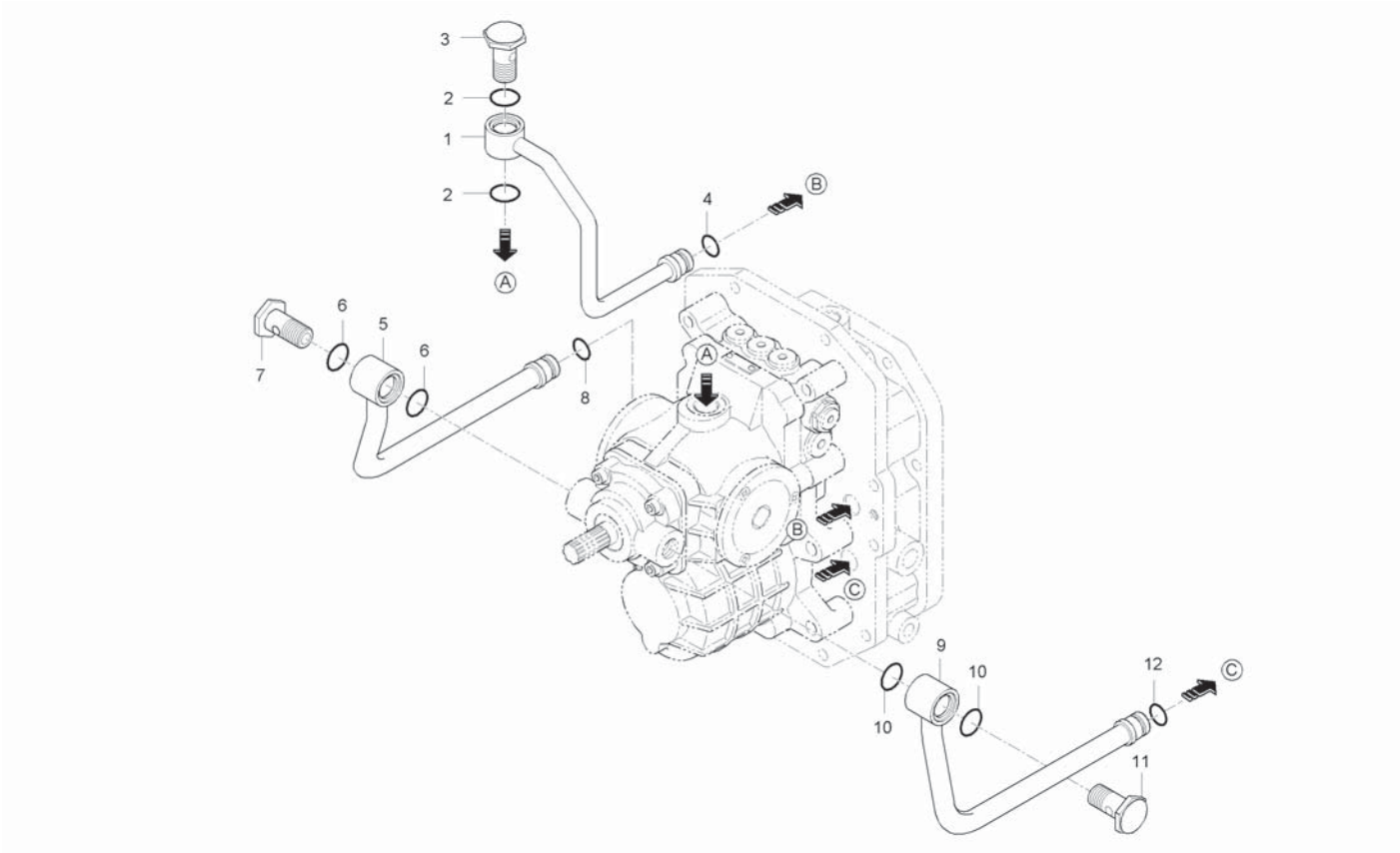

A : CK35-EU , B : CK35H-EU

No.	Part Number	Desciption	Q'TY A	Q'TY B	Q'TY C	Q'TY D	Q'TY E	I.C	Remark
1	T2195-37052	TUBE 1, HST AUTO RETURN		1 ~HT8900076					
1	T2195-37052BB	TUBE 1, HST AUTO RETURN		1 JT8900001~				<-X->	
2	04810-00200	O RING		2					
3	T2360-37101	BOLT, JOINT		1					
4	04810-00140	O RING		1					1B,P14
5	T2195-37061	TUBE 2, HST AUTO RETURN		1 ~HT8900076					
5	T2195-37061BB	TUBE 2, HST AUTO RETURN		1 JT8900001~				<-X->	
6	04810-00200	O RING		2					
7	T2360-37101	BOLT, JOINT		1					
8	04810-00140	O RING		1					1B,P14
9	T2195-37071	TUBE 3, HST AUTO RETURN		1 ~HT8900076					
9	T2195-37071BB	TUBE 3, HST AUTO RETURN		1 JT8900001~				<-X->	
10	04810-00200	O RING		2					
11	T2360-37101	BOLT, JOINT		1					
12	04810-00140	O RING		1					1B,P14

----> Old replace New
<-X-> Not interchangeable
<-O-> Interchangeable with another part(s)
<---- New replace Old
<---> Interchangeable

CK30M-T580A

STEERING CYLINDER GROUP

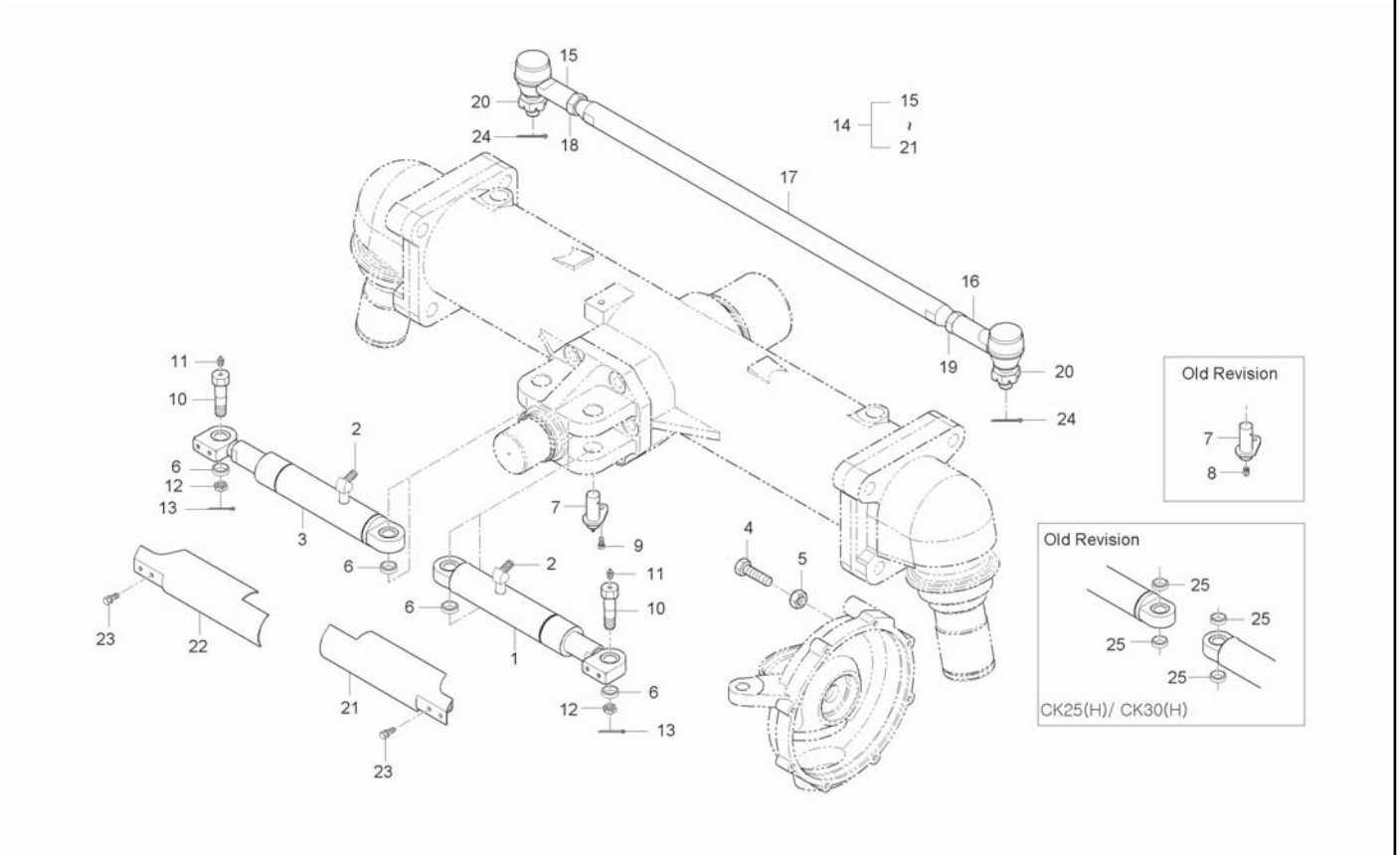

A : CK35-EU , B : CK35H-EU

No.	Part Number	Desciption	Q'TY A	Q'TY B	Q'TY C	Q'TY D	Q'TY E	I.C	Remark
1	T2185-31202	STEERING CYLINDER ASSY, LH	1						
1	T2185-32201	ASSY,STEERING CYLINDER(L)	1					<--->	
2	T4520-63381	ELBOW	1						
3	T2185-31302	STEERING CYLINDER ASSY, RH	1						
3	T2185-32301	ASSY,STEERING CYLINDER(R)	1					<--->	
4	01175-51250	BOLT	2						
5	02076-50120	NUT	2						
6	T4625-31151	SPACER	4						
7	T4625-31163	PIN, CYLINDER SUPPORT	2						
7	T4625-31361	PIN,CYLINDER SUPPORT	2					<----	
8	06613-10010	NIPPLE, GREASE	2						
9	01123-50816	BOLT, WASHER	2						
10	T2620-31182	PIN, SUPPORT	2						
11	06611-15675	NIPPLE, GREASE	2						
12	T2610-31311	NUT, SLOTIED	2						
13	05511-50335	PIN, SPLIT	2						
14	T2185-31132	TIE ROD ASSY	1 ~HT8100038						
14	T2185-31132BB	ASSY ROD,TIE	1 HT8100039~					<-X->	
15	T2240-12602	TIE ROD END ASSY, RH	1						

----> Old replace New
<-X-> Not interchangeable
<-O-> Interchangeable with another part(s)
<---- New replace Old
<---> Interchangeable

CK30M-T580A STEERING CYLINDER GROUP

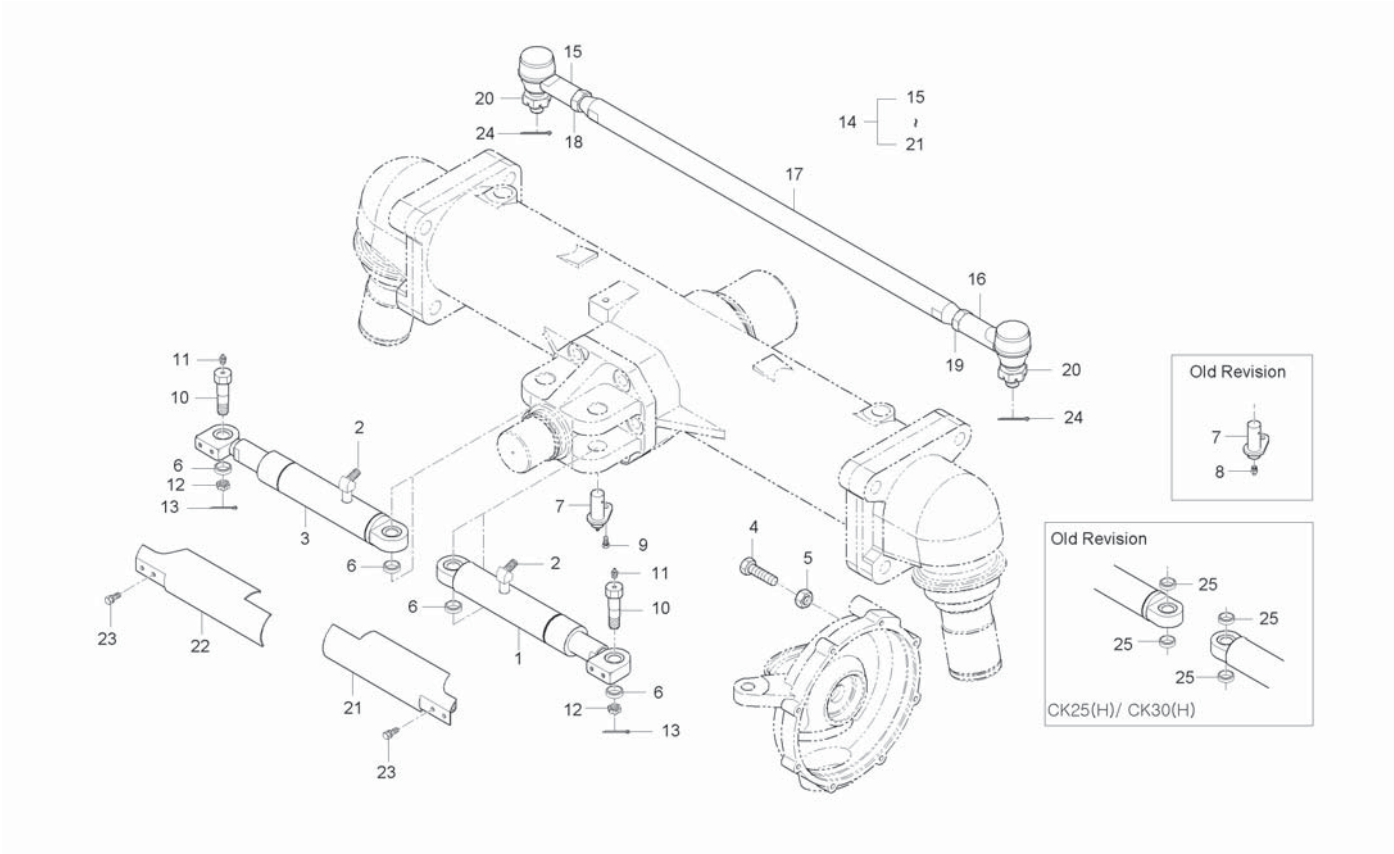

A : CK35-EU , B : CK35H-EU

No.	Part Number	Desciption	Q'TY A	Q'TY B	Q'TY C	Q'TY D	Q'TY E	I.C	Remark
16	T2240-12702	TIE ROD END ASSY, LH	1						
17	T2185-31142	ROD, TIE	1						
18	02174-50160	NUT	1						
19	37650-1128-1	NUT	1						
20	34150-1283-1	NUT, SLOTIED	2						
21	T2185-31332	COVER, CYLINDER LH	1 ~HT8100038						
21	T2185-31332BB	COVER, CYLINDER LH	1 HT8100039~					<-X->	
22	T2185-31342	COVER, CYLINDER RH	1 ~HT8100038						
22	T2185-31342BB	COVER, CYLINDER RH	1 HT8100039~					<-X->	
23	01023-50610	BOLT, WASHER	4						
24	05511-50335	PIN, SPLIT	2						
25	T2185-31151	SPACER	4						

----> Old replace New
<-X-> Not interchangeable
<-O-> Interchangeable with another part(s)
<---- New replace Old
<---> Interchangeable

CK30H-T590A POWER STEERING CYLINDER GROUP

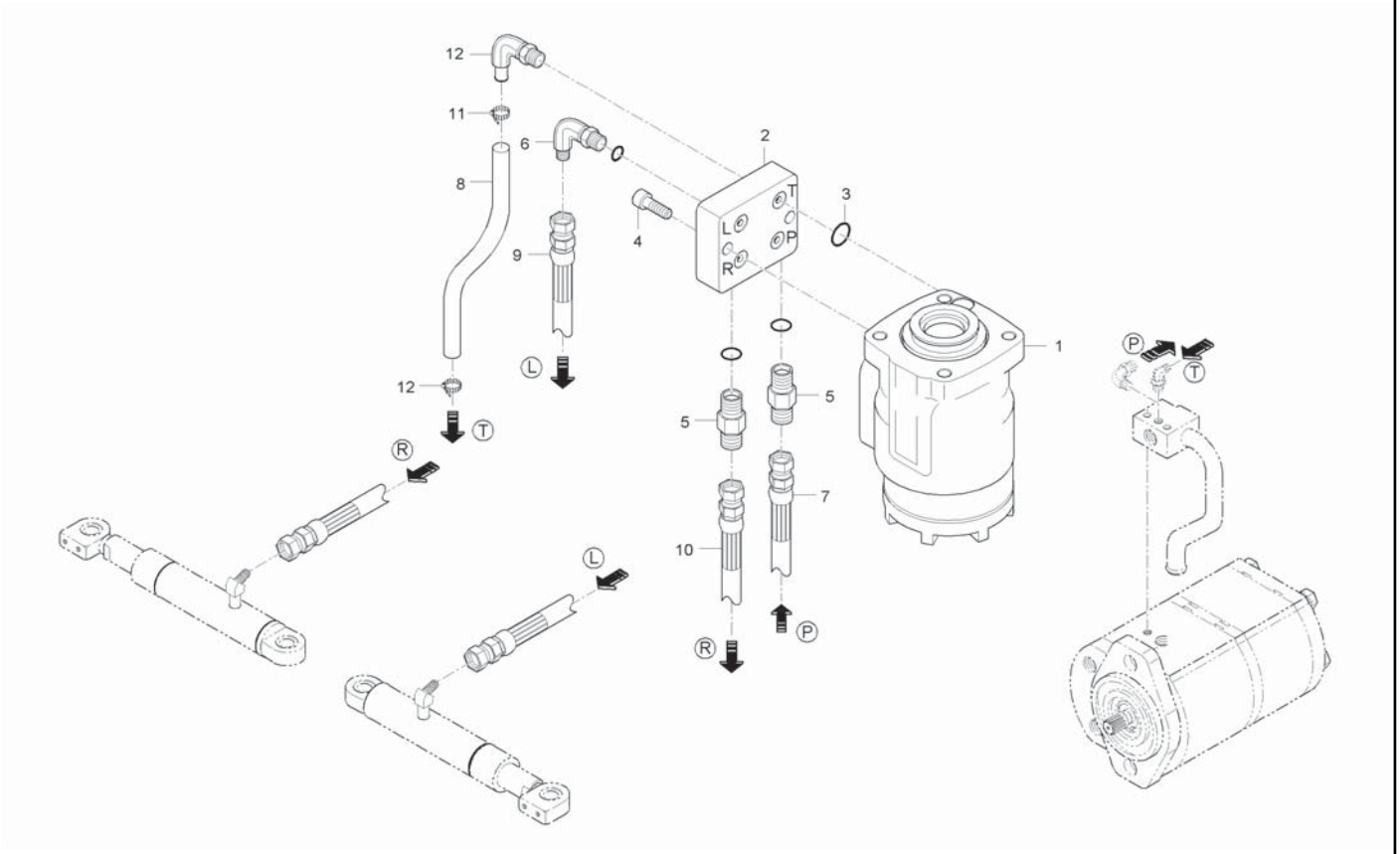

A : CK35-EU , B : CK35H-EU

No.	Part Number	Desciption	Q'TY A	Q'TY B	Q'TY C	Q'TY D	Q'TY E	I.C	Remark
1	T2185-62101	UNIT, POWER STEERING	1	1					
2	T2185-66021	BLOCK, HYDRAULIC	1	1					
3	04810-00220	O RING	4	4					
4	T2185-66221	BOLT, SOCKET	2	2					
5	T4620-66161	CONNECTOR	2	2					
6	T2185-66231	ELBOW	1	1					
7	T2185-45003	STEERING HOSE ASSY, P	1	1					
8	T2185-45012	STEERING HOSE ASSY, T	1	1					
9	T2185-45021	STEERING HOSE ASSY, L	1	1					
10	T2185-45032	STEERING HOSE ASSY, R	1	1					
11	52200-2523-1	BAND, HOSE	2	2					
12	T4682-34141	ELBOW	1	1					

----> Old replace New
<-X-> Not interchangeable
<-O-> Interchangeable with another part(s)
<---- New replace Old
<---> Interchangeable

CK30M-T590A

POWER STEERING GROUP

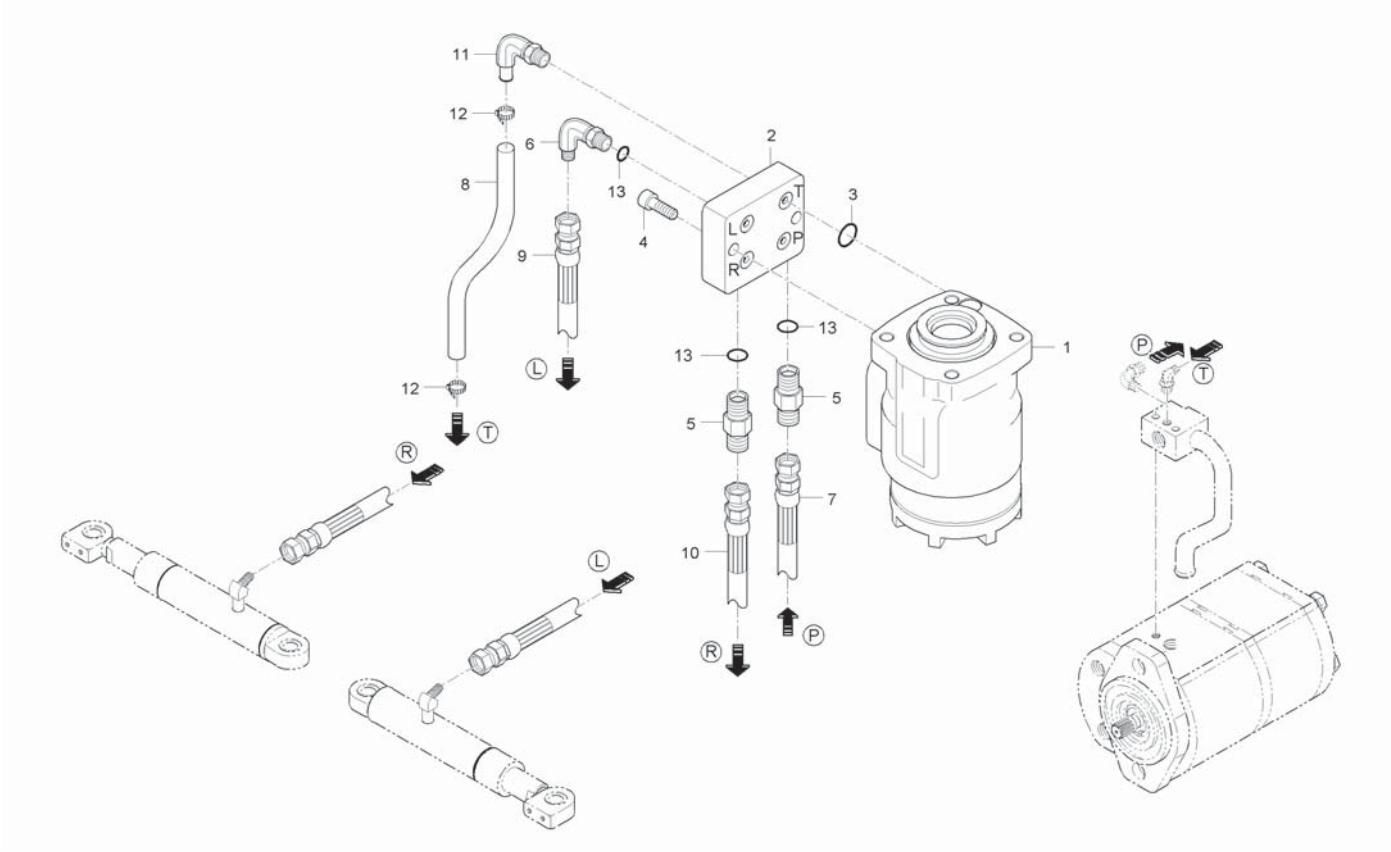

A : CK35-EU , B : CK35H-EU

No.	Part Number	Desciption	Q'TY A	Q'TY B	Q'TY C	Q'TY D	Q'TY E	I.C	Remark
1	T2185-66001	UNIT, POWER STEERING	1	1					
2	T2185-66021	BLOCK, HYDRAULIC	1	1					
3	04810-00220	O RING	4	4					
4	T2185-66221	BOLT, SOCKET	2	2					
5	T4620-66161	CONNECTOR	2	2					
6	T2185-66231	ELBOW	1	1					
7	T2185-45003	STEERING HOSE ASSY, P	1	1					
8	T2185-45012	STEERING HOSE ASSY, T	1	1					
9	T2185-45021	STEERING HOSE ASSY, L	1	1					
10	T2185-45032	STEERING HOSE ASSY, R	1	1					
11	T4682-34141	ELBOW	1	1					
11	T4682-34142	ELBOW	1	1				<--->	
12	52200-2523-1	BAND, HOSE	2	2					
13	04811-00110	O RING	1	1					

----> Old replace New
<-X-> Not interchangeable
<-O-> Interchangeable with another part(s)
<---- New replace Old
<---> Interchangeable

CK30HE-T620-2A

HYDRAULIC CYLINDER GROUP

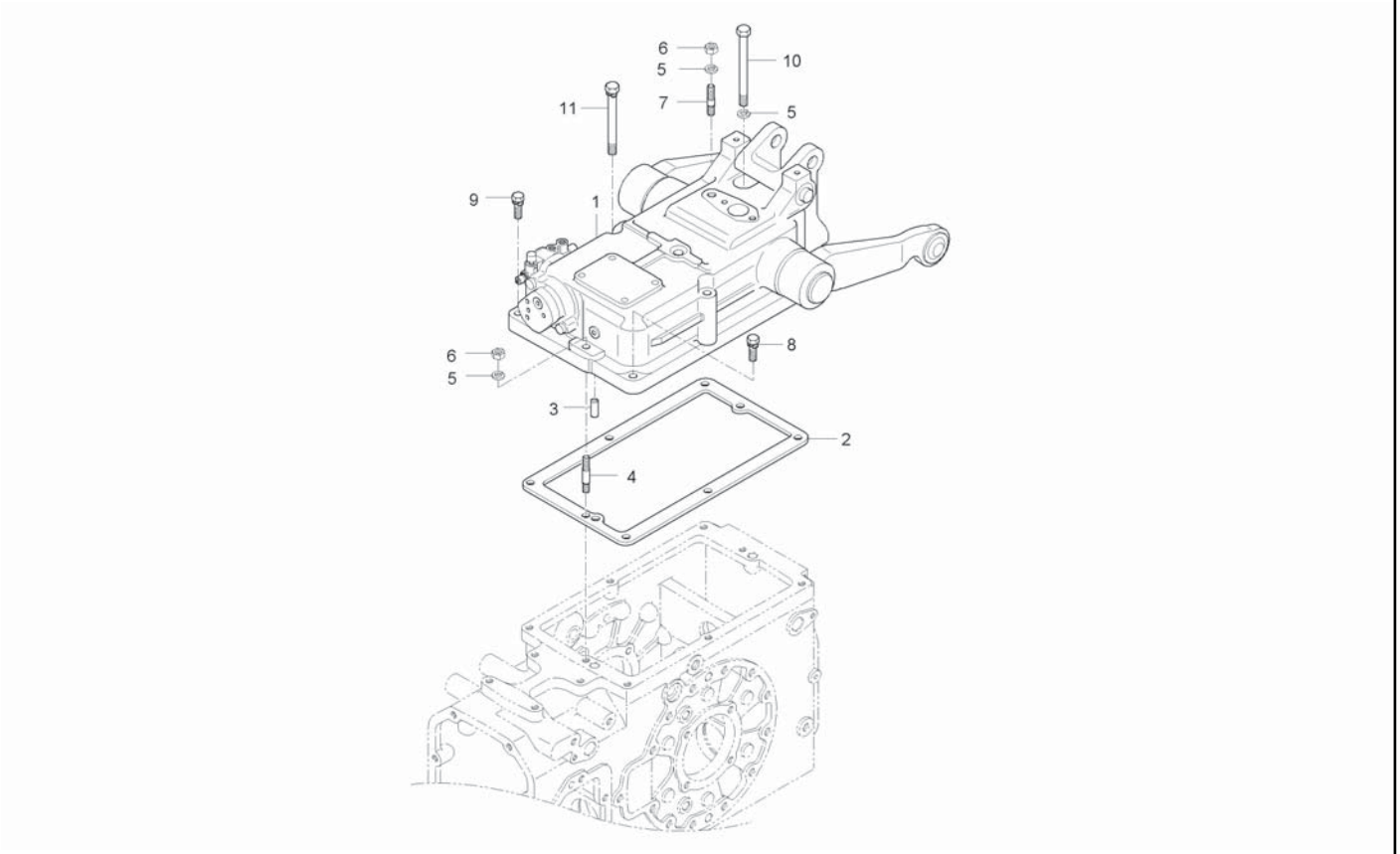

A : CK35-EU , B : CK35H-EU

No.	Part Number	Desciption	Q'TY A	Q'TY B	Q'TY C	Q'TY D	Q'TY E	I.C	Remark
1	T2185-31102	HYDRAULIC CYLINDER ASSY		1				<--->	
1	T2185-31103	ASSY,HYD CYLINDER		1 ~JT8900023				<--->	
1	T2185-31104	ASSY,HYD CYLINDER		1 JT8900024~				<-0->	
2	T4620-37121	PACKING		1					
3	37805-4350-1	PIN, PARALLEL		1					
4	01517-51050	STUD		1					
5	04512-50100	WASHER, SPRING		3					M10
6	02176-50100	NUT		2					M10X1.25
7	01517-51035	STUD		1					
8	01133-51038	BOLT, WASHER		2					M10*1.25*38
9	01133-51030	BOLT, WASHER		1					M10*1.25
10	T2305-14151	BOLT		1					
11	01133-51003	BOLT, WASHER		2					

----> Old replace New
<-X-> Not interchangeable
<-O-> Interchangeable with another part(s)

<---- New replace Old
<---> Interchangeable

CK30ME-T620-2A HYDRAULIC CYLINDER GROUP

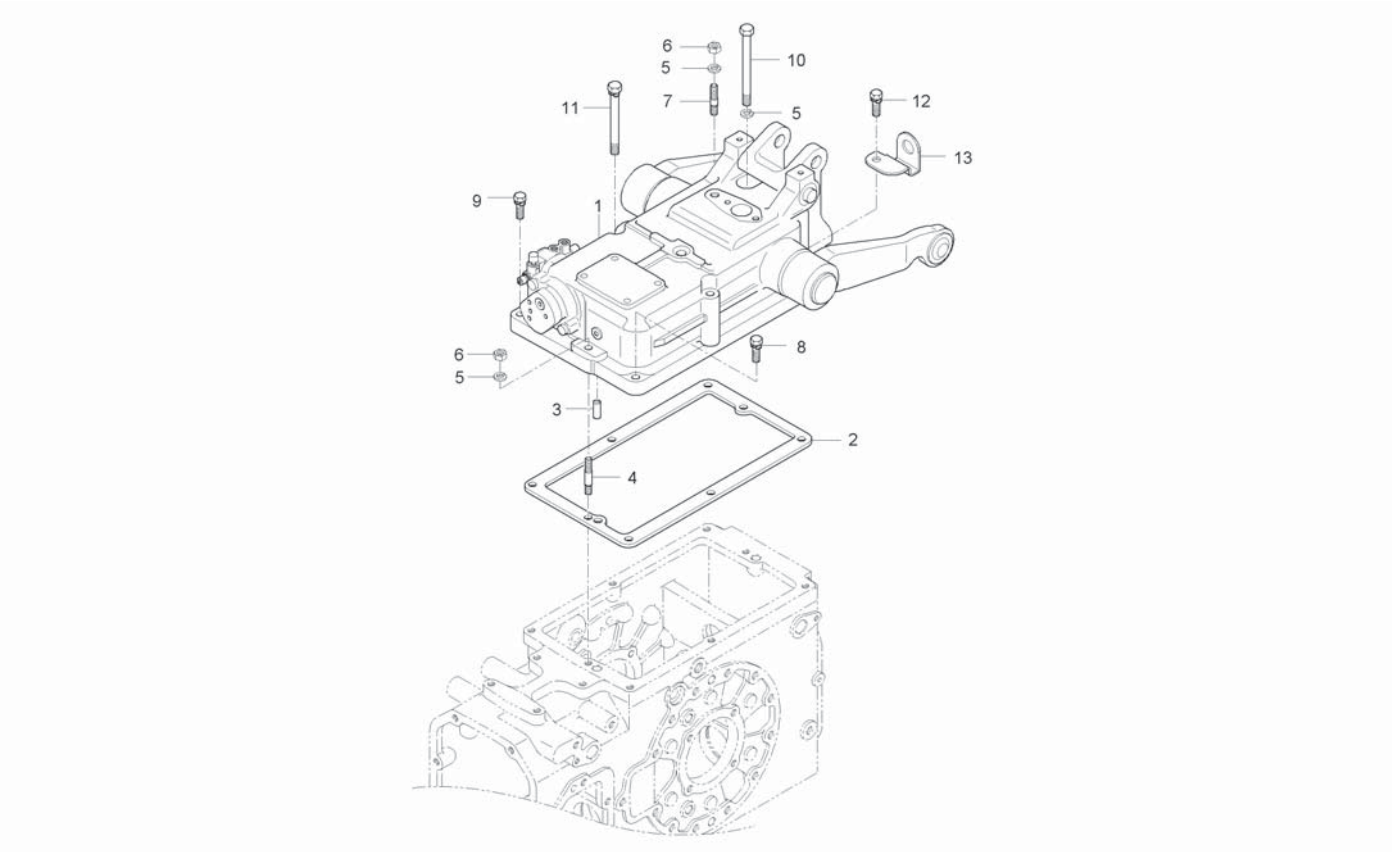

A : CK35-EU , B : CK35H-EU

No.	Part Number	Desciption	Q'TY A	Q'TY B	Q'TY C	Q'TY D	Q'TY E	I.C	Remark
1	T2185-31101	HYDRAULIC CYLINDER ASSY	1						
1	T2185-31102	HYDRAULIC CYLINDER ASSY	1					<--->	
2	T4620-37121	PACKING	1						
3	37805-4350-1	PIN, PARALLEL	1						
4	01517-51050	STUD	1						
5	04512-50100	WASHER, SPRING	3						
6	02176-50100	NUT	2						
7	01517-51035	STUD	1						
8	01133-51038	BOLT, WASHER	2						
9	01133-51030	BOLT, WASHER	1						
10	T2305-14151	BOLT	1						
11	01133-51003	BOLT, WASHER	2						
12	01133-51040	BOLT, WASHER	1						
13	T2181-24751	STOPPER, CREEP	1						

----> Old replace New
<-X-> Not interchangeable
<-O-> Interchangeable with another part(s)
<---- New replace Old
<---> Interchangeable

CK30ME-T630-2A HYDRAULIC CYLINDER BODY GROUP

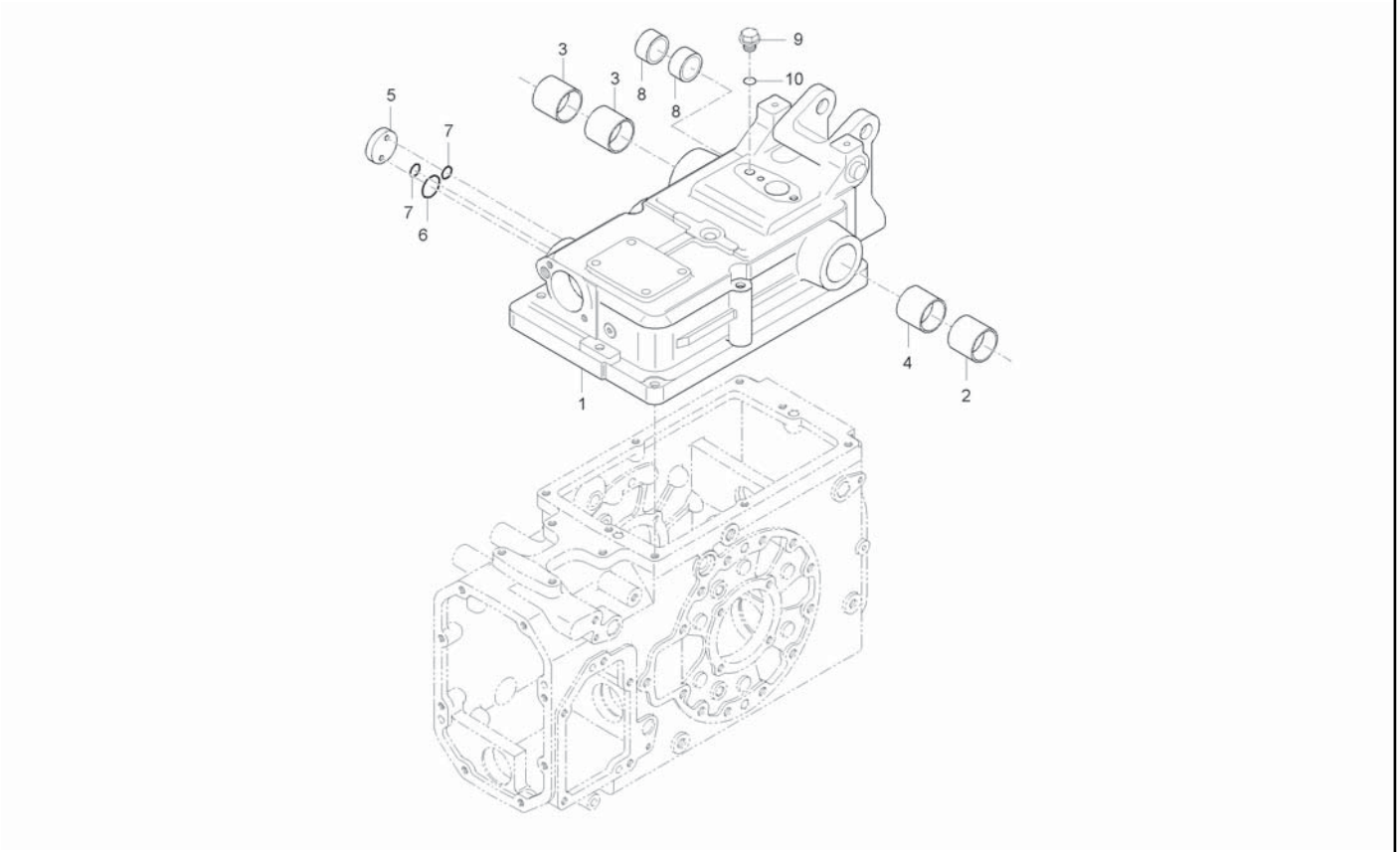

A : CK35-EU , B : CK35H-EU

No.	Part Number	Desciption	Q'TY A	Q'TY B	Q'TY C	Q'TY D	Q'TY E	I.C	Remark
1	T2181-37124	BODY, HYDRAULIC CYLINDER	1	1					
2	08511-04530	BUSH	1	1					
3	08511-05040	BUSH	2	2					50/55*40
4	08511-04540	BUSH	1	1					45/50*40
5	T2610-37471	COVER	1						
5	T2610-37473	COVER	1	1				<--->	
6	04811-06250	O RING	1	1					
7	04810-00120	O RING	2	2					
8	08511-01615	BUSH	2	2					MB1615DU
9	06311-55010	PLUG	1	1					
10	04717-01000	WASHER, SEAL	1	1					M10

----> Old replace New
<-X-> Not interchangeable
<-O-> Interchangeable with another part(s)
<---- New replace Old
<---> Interchangeable

CK30M-T640A

HYDRAULIC LIFT ARM GROUP

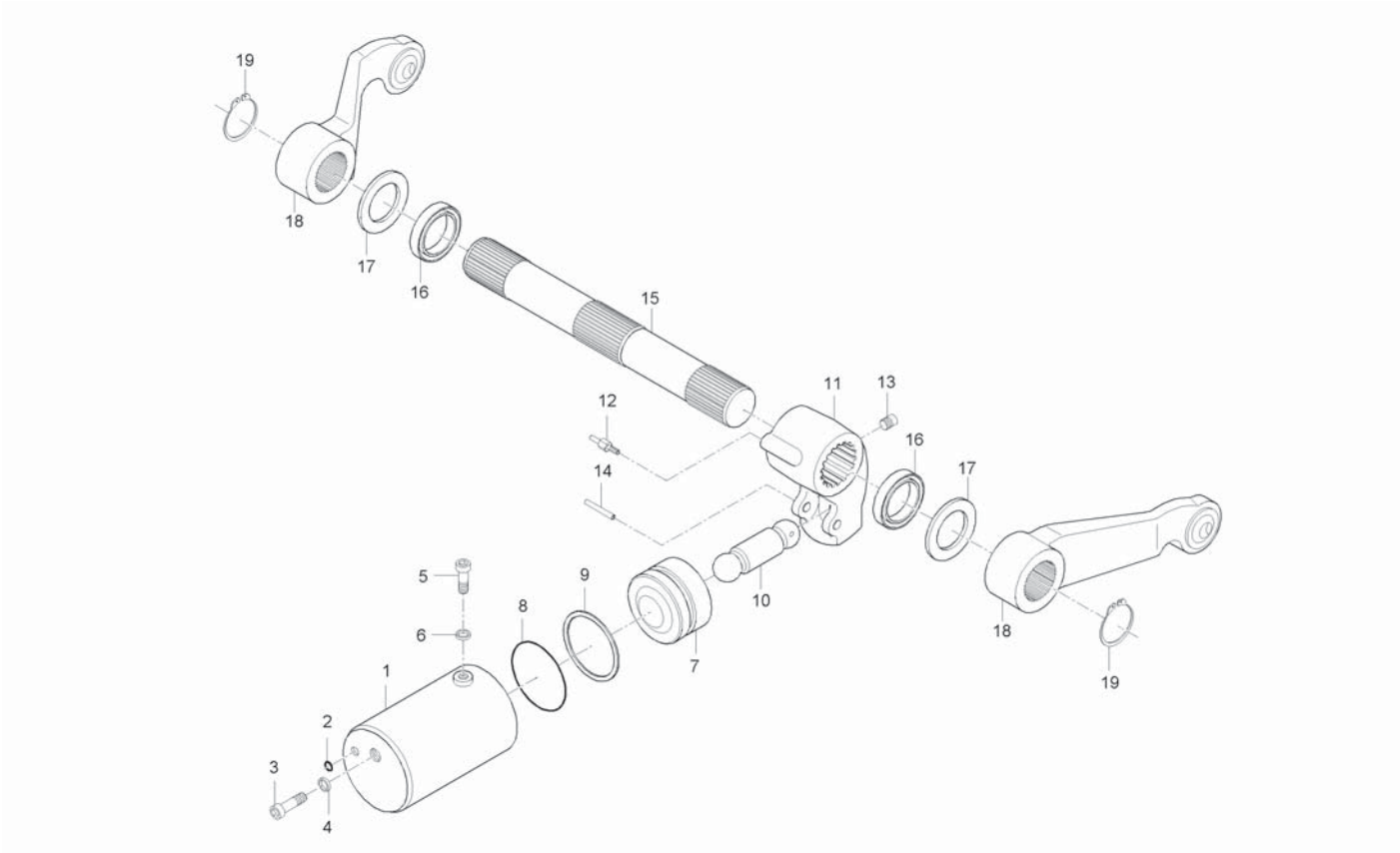

A : CK35-EU , B : CK35H-EU

No.	Part Number	Desciption	Q'TY A	Q'TY B	Q'TY C	Q'TY D	Q'TY E	I.C	Remark
1	T2610-37303	CYLINDER	1	1					
2	04810-00120	O RING	1	1					
3	T2610-37362	BOLT, HEXAGON SOCKET	1	1					
4	04717-01200	WASHER, SEAL	1	1					
5	T2610-37352	BOLT, HEXAGON SOCKET	1	1					
6	04717-01400	WASHER, SEAL	1	1					
7	T2610-37312	PISTON	1	1					
8	04810-00800	O RING	1	1					
9	T2610-37331	BACK UP RING	1	1					
10	T2610-37322	ROD,HYDRAULIC	1	1					
11	T2610-37442	ARM, HYDRAULIC	1	1					
12	T2610-37421	PIN	1	1					
13	T2610-37453	SCREW, HOLDER	1	1					
14	05411-00850	PIN, SPRING	1	1					8*50
15	T4681-37431	SHAFT, HYDRAULIC ARM	1	1					
16	09500-45609	SEAL, OIL	2	2					
17	T2610-37461	WASHER	2	2					
18	T2185-37201	LIFT ARM ASSY	2	2					
19	04612-00450	SNAP RING	2	2					

----> Old replace New
<-X-> Not interchangeable
<-O-> Interchangeable with another part(s)
<---- New replace Old
<---> Interchangeable

D360-T640A

HYDRULIC SYSTEM 2 GROUP

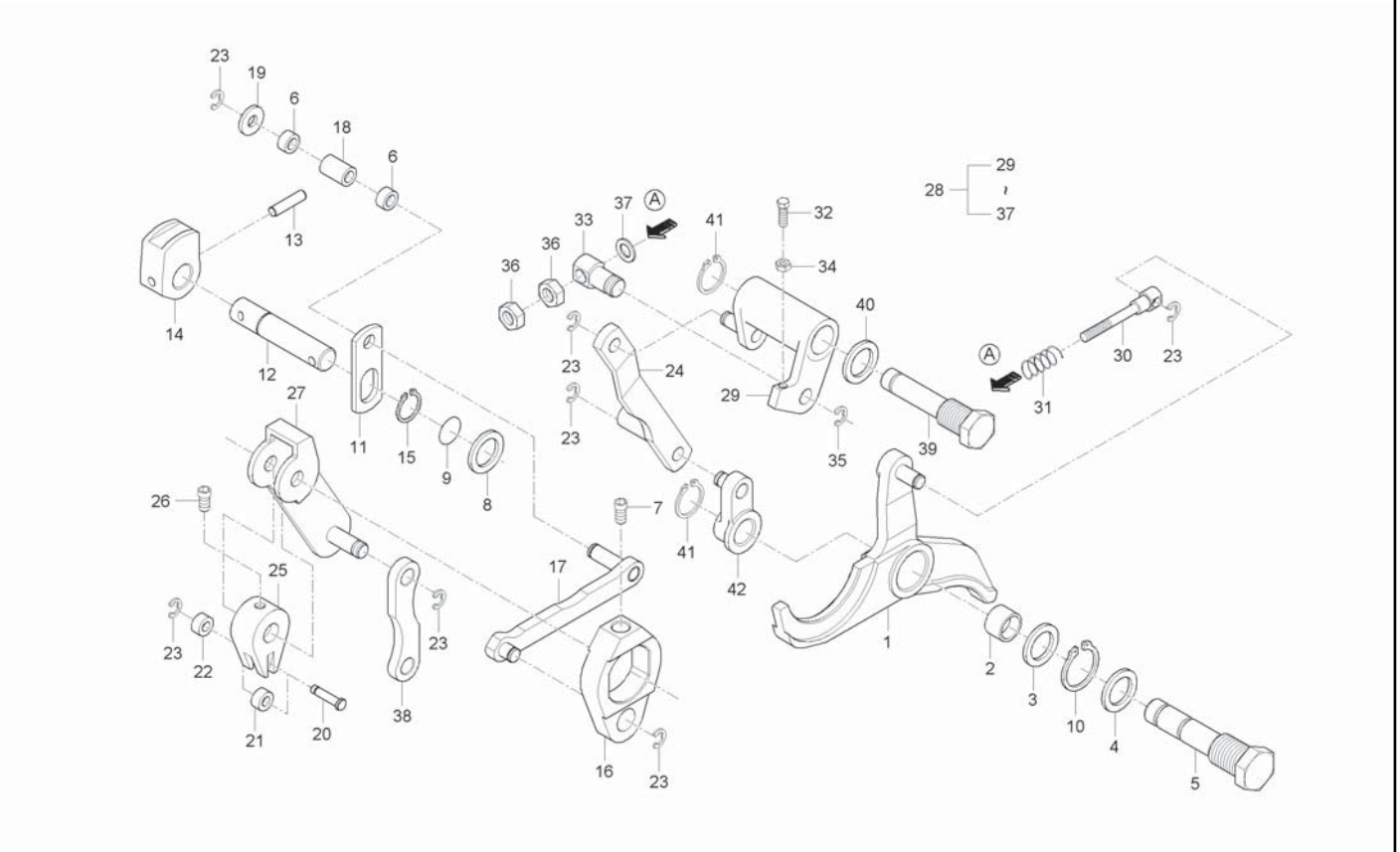

A : CK35-EU , B : CK35H-EU

No.	Part Number	Desciption	Q'TY A	Q'TY B	Q'TY C	Q'TY D	Q'TY E	I.C	Remark
1	T2610-39351	LEVER	1	1					
1	T2610-39352	LEVER	1	1				<--->	
2	08811-62216	NEEDLE BEARING	1	1					
3	T2610-39371	WASHER	1	1					
4	04724-00180	PACKING	1	1					
5	T2610-39402	PIN	1	1					
6	T2610-39411	ROLLER, 3	2	2					
7	T2610-39422	SCREW, HOLDER	1	1					
8	T2610-39431	SEAL, OIL	1	1					
9	04811-00160	O RING	1	1					DIA15.8
10	04612-00160	SNAP RING	1	1					
11	T2610-39441	LINK, 4	1	1					
12	T2610-39451	SHAFT	1	1					
13	05411-00635	PIN, SPRING	1	1					DIA5*36
14	T2610-39462	CAM	1	1					
14	T2610-39463	CAM	1	1				<--->	
15	04613-50070	SNAP RING	1	1					
16	T2610-39472	LINK, 1	1	1					
16	T2610-39473	LINK, 1	1	1				<--->	

----> Old replace New
<-X-> Not interchangeable
<-O-> Interchangeable with another part(s)
<---- New replace Old
<---> Interchangeable

D360-T640A

HYDRULIC SYSTEM 2 GROUP

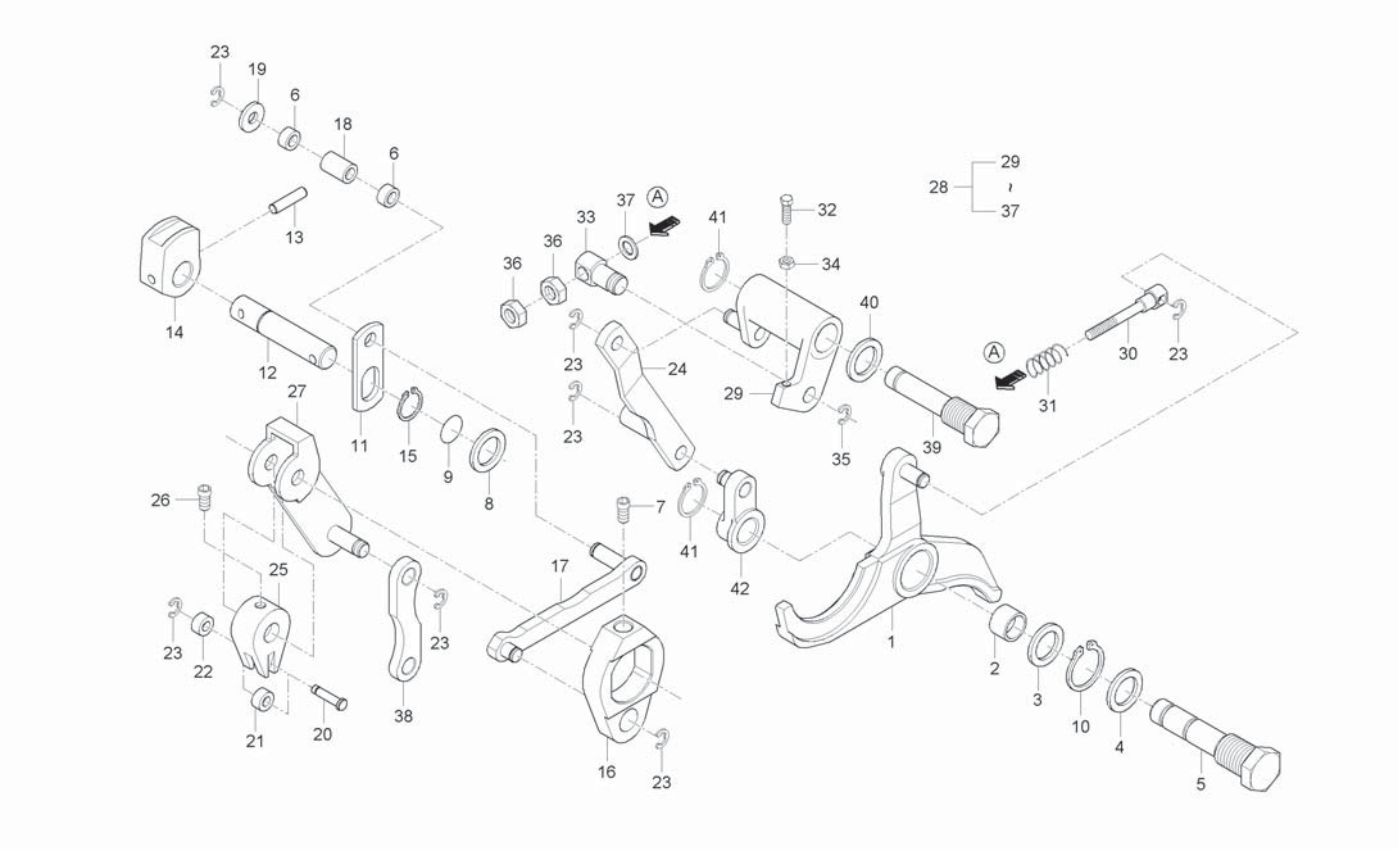

A : CK35-EU , B : CK35H-EU

No.	Part Number	Desciption	Q'TY A	Q'TY B	Q'TY C	Q'TY D	Q'TY E	I.C	Remark
17	T2610-39481	LINK, 2	1	1					
18	T2610-39491	ROLLER, 4	1	1					
19	04011-50100	WASHER, PLAIN	1	1					M10
20	T2610-39511	PIN	1	1					
21	T2610-39521	ROLLER, 1	1	1					
22	T2610-39531	ROLLER, 2	1	1					
23	04613-50060	SNAP RING	6	6					
24	T2610-39551	LINK	1	1					
25	T2610-39562	ARM	1	1					
26	T2610-39572	SCREW, HOLDER	1	1					
27	T2610-39582	CAM, 1	1	1					
28	T2610-39641	LINK ASSY	1	1					
29	T2610-39621	ARM	1	1					
30	T2610-39661	PIN	1	1					
31	T2610-39672	SPRING	1	1					
32	T2610-39631	BOLT	1	1					
33	T2610-39601	PIN	1	1					
34	02114-50080	NUT	1	1					M8*P1.25
35	04613-50060	SNAP RING	1	1					

----> Old replace New
<-X-> Not interchangeable
<-O-> Interchangeable with another part(s)
<---- New replace Old
<---> Interchangeable

D360-T640A

HYDRULIC SYSTEM 2 GROUP

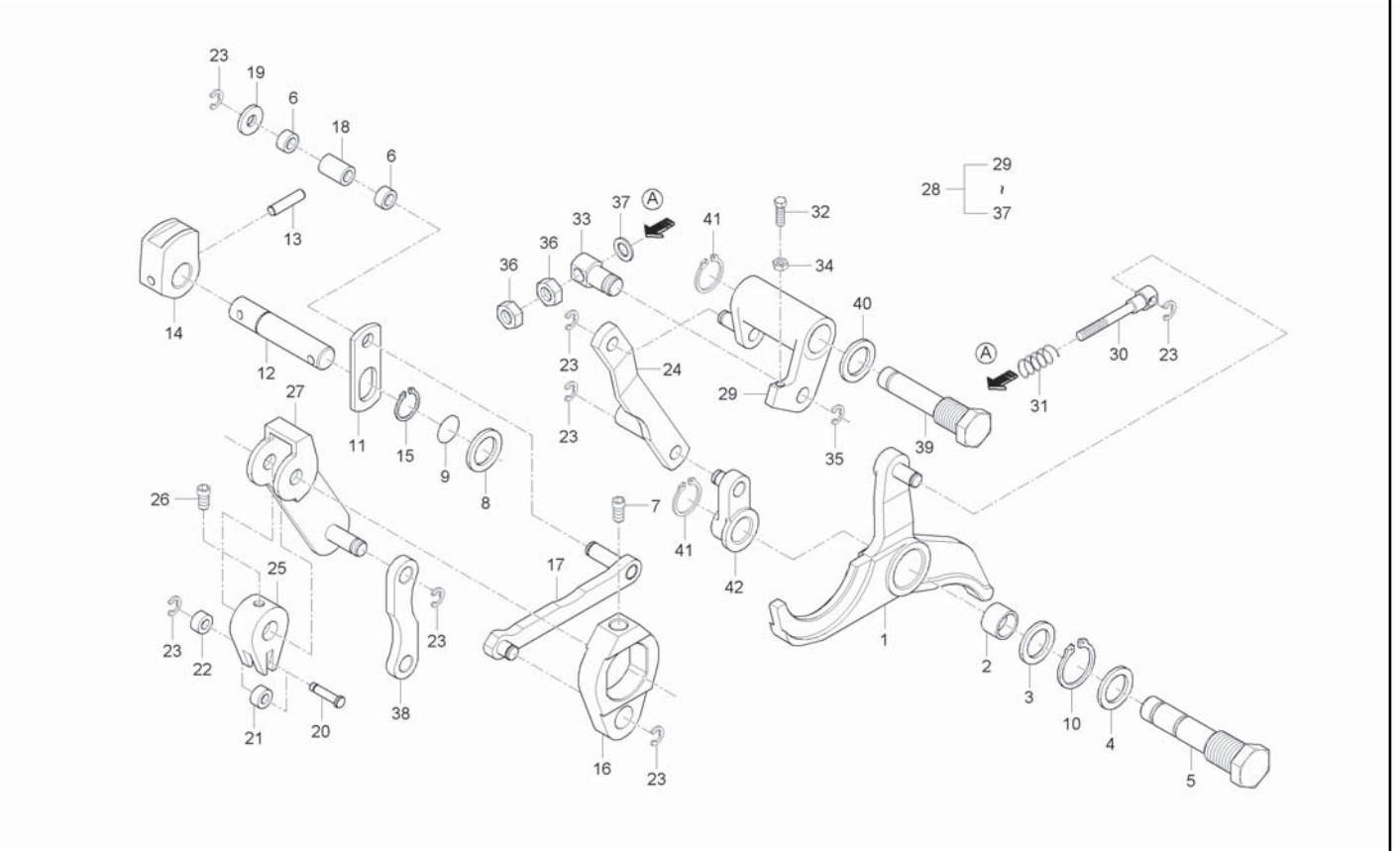

A : CK35-EU , B : CK35H-EU

No.	Part Number	Desciption	Q'TY A	Q'TY B	Q'TY C	Q'TY D	Q'TY E	I.C	Remark
36	02014-50060	NUT	2	2					M6*P1.0
37	04014-50060	WASHER, PLAIN	1	1					
38	T2610-39611	LINK, 3	1	1					
39	T2610-39652	PIN	1	1					
40	04724-00180	PACKING	1	1					
41	04612-00150	SNAP RING	2	2					
42	T2610-39681	LINK	1	1					

----> Old replace New
<-X-> Not interchangeable
<-O-> Interchangeable with another part(s)
<---- New replace Old
<---> Interchangeable

CK30ME-T650A

HYDRULIC SYSTEM 1 GROUP

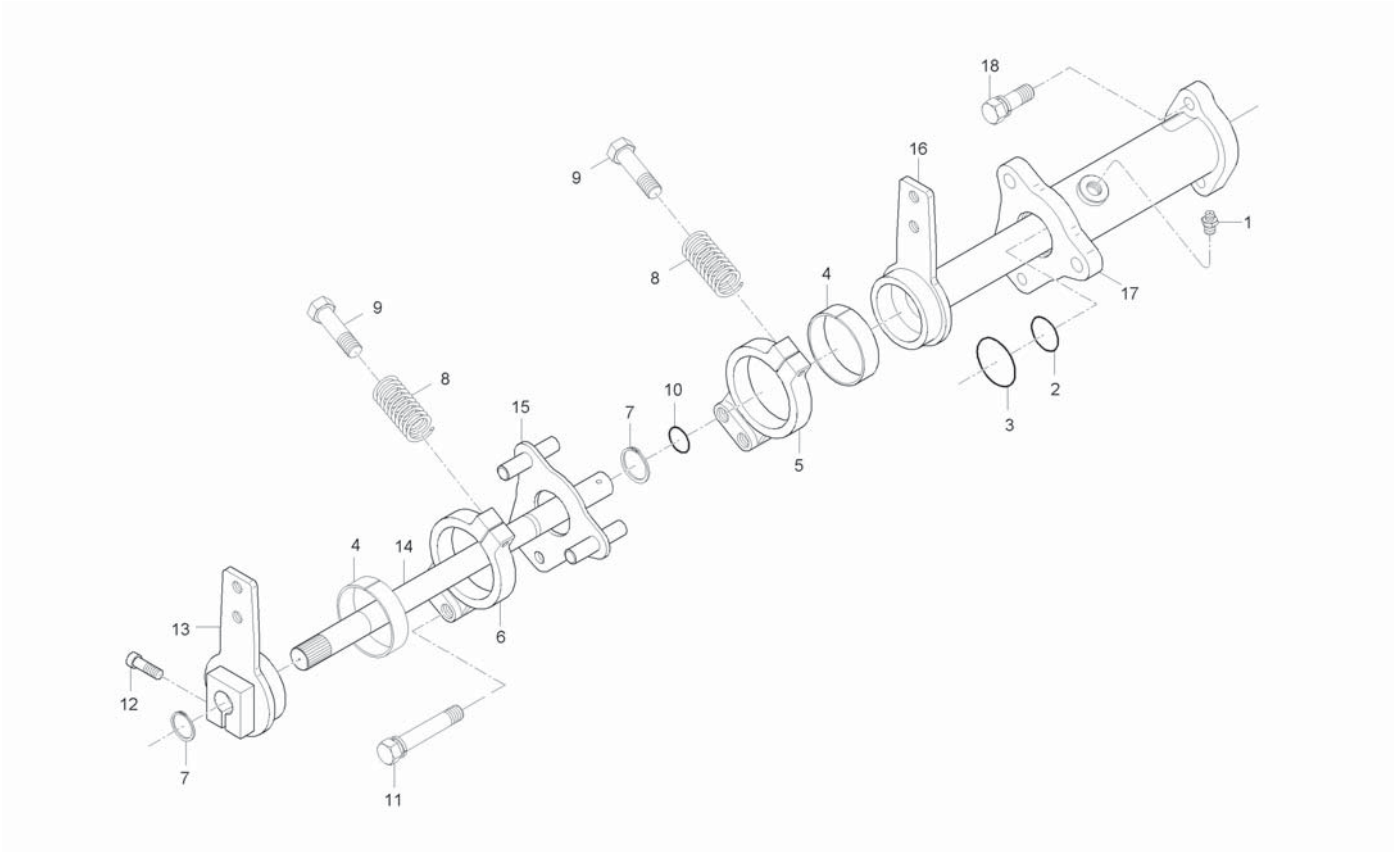

A : CK35-EU , B : CK35H-EU

No.	Part Number	Desciption	Q'TY A	Q'TY B	Q'TY C	Q'TY D	Q'TY E	I.C	Remark
1	06613-10010	NIPPLE, GREASE	1	1					A-M6F
2	04811-00210	O RING	1	1					
3	04811-00250	O RING	1	1					
4	T2610-39202	CLUTCH	2	2					
5	T2610-39212	HUB 1, CLUTCH	1	1					
6	T2610-39222	HUB 2, CLUTCH	1	1					
7	04612-00160	SNAP RING	2	2					
8	T2610-39233	SPRING	2	2					
9	01053-50640	BOLT	2	2					HEX10*42
10	04811-00120	O RING	1	1					
11	01123-50855	BOLT, WASHER	2	2					
12	T2610-39252	BOLT, HEXAGEN	1	1					
13	T2610-39261	LEVER, CONTROL	1	1					
14	T2185-39271	SHAFT	1	1					
15	T2610-39281	FLANGE	1	1					
16	T2185-39292	ARM, PITMAN	1	1					
17	T2185-39301	SUPPORT, HYDRAULIC LEVER	1	1					
18	01123-50825	BOLT, WASHER	2	2					M8*P1.25

----> Old replace New
<-X-> Not interchangeable
<-O-> Interchangeable with another part(s)
<---- New replace Old
<---> Interchangeable

D360-T650A

TOP LINK BRACKET GROUP

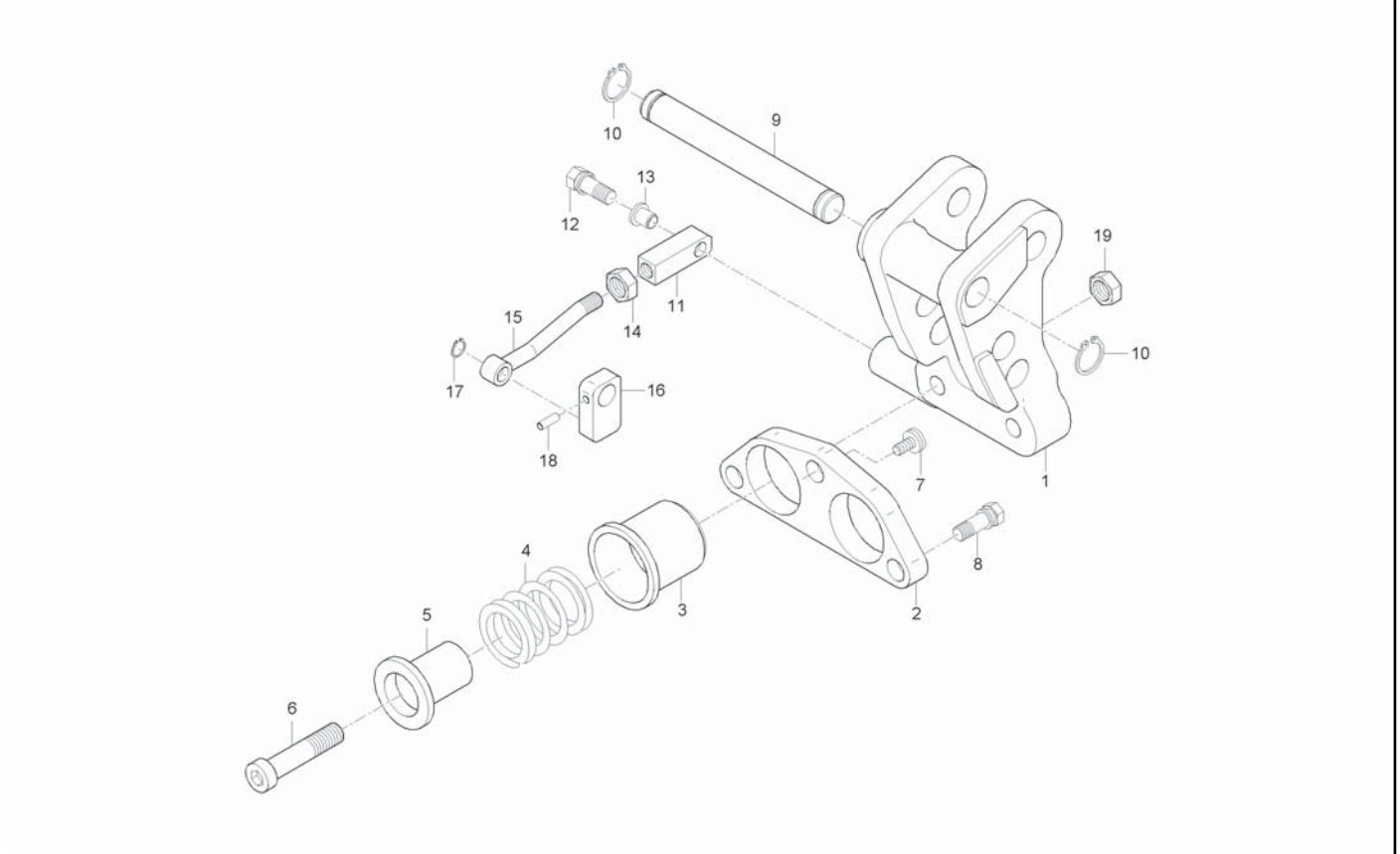

A : CK35-EU , B : CK35H-EU

No.	Part Number	Desciption	Q'TY A	Q'TY B	Q'TY C	Q'TY D	Q'TY E	I.C	Remark
1	T2610-39802	HOLDER, TOP LINK	1	1					
2	T2610-39811	FLANGE	1	1					
3	T2610-39821	COVER	1	1					
4	T2610-39832	SPRING	2	2					
5	T2610-39842	ROLLER	2	2					
6	T2610-39852	BOLT, HEXAGON SOCKET	2	2					
7	T2610-39862	BOLT, DISH HEAD	1	1					
8	01123-51035	BOLT, WASHER	2	2					M10XP1.5
9	T2610-39901	PIN	1	1					
10	04612-00200	RING, SNAP	2	2					DIA20
11	T2610-39911	PLATE	1	1					
12	01123-50835	BOLT, WASHER	1	1					M8X1.25
13	T2610-39921	ROLLER	1	1					
14	02118-50100	NUT	1	1					M10*P1.25
15	T2610-39931	ROD, TIE	1	1					
16	T2610-39951	CRANK	1	1					
17	04613-50070	SNAP RING	1	1					
18	05411-00625	PIN, SPRING	1	1					DIA6*25
19	T2610-39961	NUT, REMOVE CHECK	2	2					

----> Old replace New
<-X-> Not interchangeable
<-O-> Interchangeable with another part(s)
<---- New replace Old
<---> Interchangeable

CK30M-T680A MAIN DISTRIBUTOR VALVE GROUP

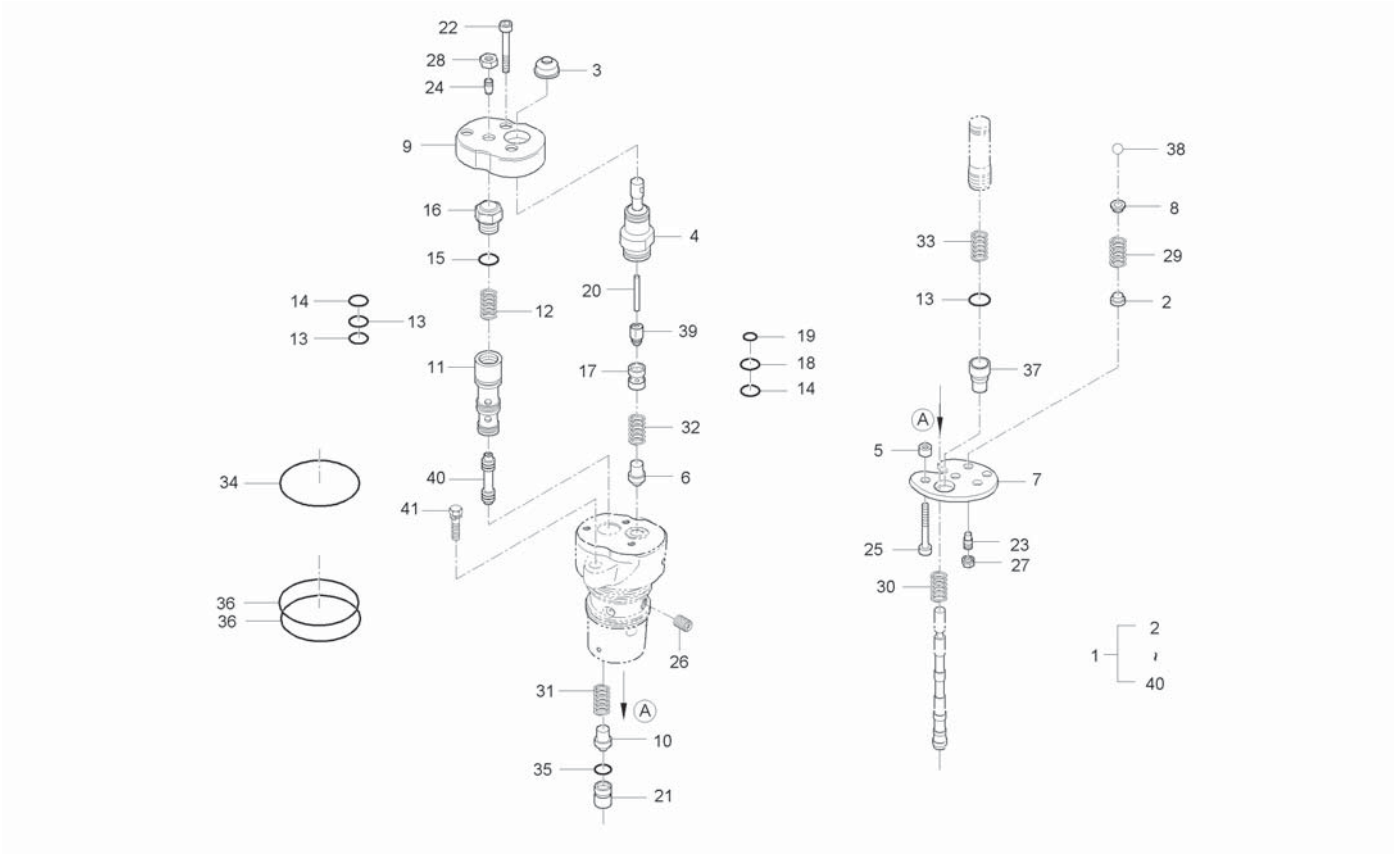

A : CK35-EU , B : CK35H-EU

No.	Part Number	Desciption	Q'TY A	Q'TY B	Q'TY C	Q'TY D	Q'TY E	I.C	Remark
1	110053004	MLS V/V (MORE STEPS)	1	1					
1	110083004	MLS V/V (MORE STEPS)	1	1				<----	
2	010001080	SPACER	1	1					
3	110001110	RUBBER GUADE	1	1					
4	110009032	ASSY,LEVER KIT	1	1					
5	110001160	SPACER	3	3					
6	110003040	VALVE	1	1					
7	110003150	PLATE	1	1					
8	110004080	SPACER	1	1					
9	110004090	COVER	1	1					
10	110005040	VALVE	1	1					
11	110006032	VALVE	1	1					
12	350044000	SPRING	1	1					
13	360011000	O-RING	3	3					
14	360054000	O-RING	2	2					
15	360076000	O-RING	1	1					
16	440144000	PLUG	1	1					
17	110011020	VALVE SEAT	1	1					
18	360009000	O-RING	1	1					

----> Old replace New
<-X-> Not interchangeable
<-O-> Interchangeable with another part(s)
<---- New replace Old
<---> Interchangeable

CK30M-T680A MAIN DISTRIBUTOR VALVE GROUP

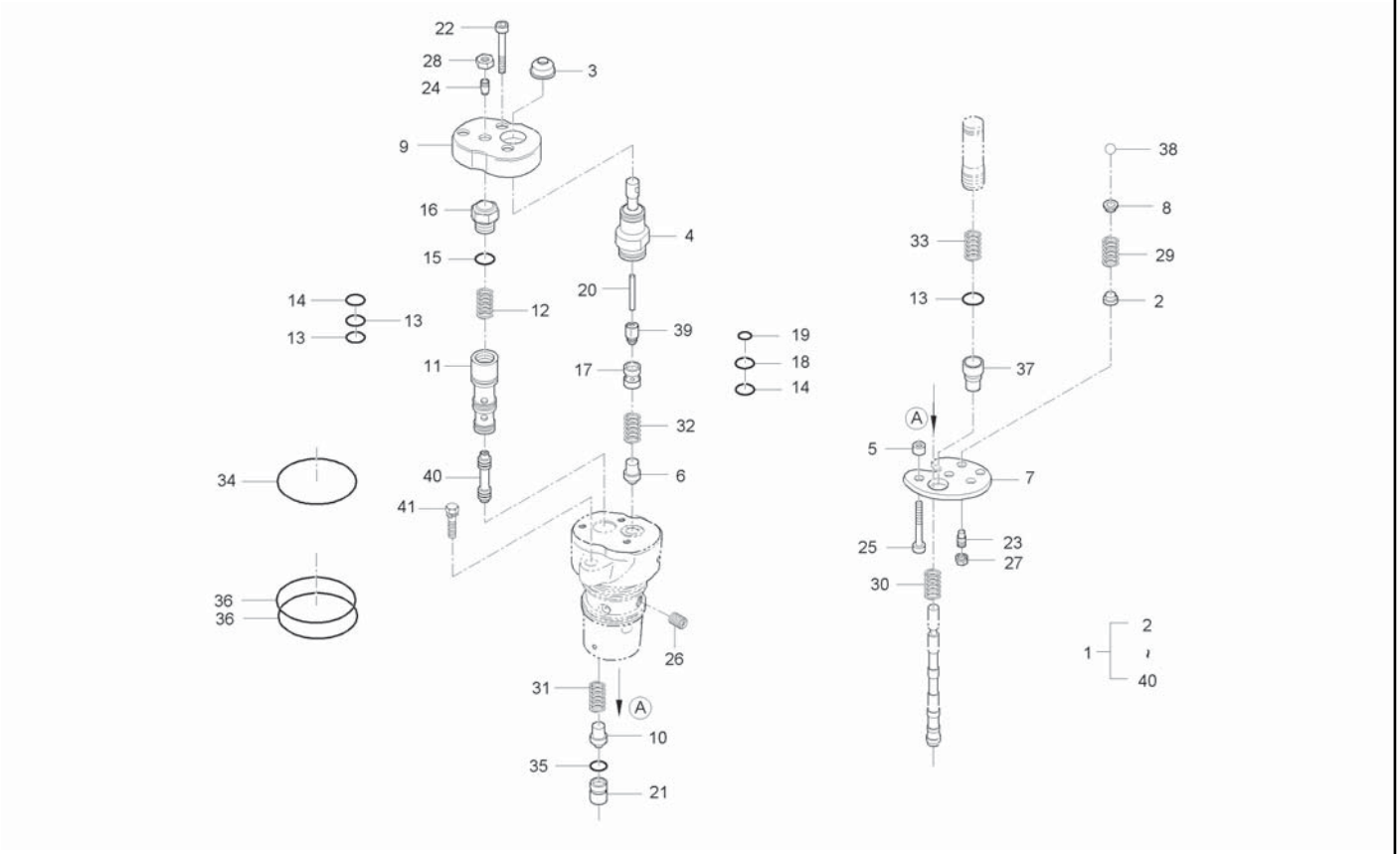

A : CK35-EU , B : CK35H-EU

No.	Part Number	Desciption	Q'TY A	Q'TY B	Q'TY C	Q'TY D	Q'TY E	I.C	Remark
19	360010000	O-RING	1	1					
20	460002000	PIN	1	1					
21	110012020	VALVE SEAT	1	1					
22	300002000	ADJUST SCREW	1	1					
23	300004000	ADJUST SCREW	1	1					
24	300093000	SCREW	1	1					
25	300129000	ADJUST SCREW	3	3					
26	300180000	SCREW	1	1					
27	310001000	NUT	1	1					
28	310003000	NUT	1	1					
29	350005000	SPRING	1	1					
30	350011000	SPRING	1	1					
31	350027000	SPRING	1	1					
32	350043000	SPRING	1	1					
33	350046000	SPRING	1	1					
34	360003000	SEAL	1	1					
34	360156000	O-RING	1	1				<----	
35	360073000	O-RING	1	1					
36	360077000	O-RING	2	2					

----> Old replace New
<-X-> Not interchangeable
<-O-> Interchangeable with another part(s)
<---- New replace Old
<---> Interchangeable

CK30M-T680A

MAIN DISTRIBUTOR VALVE GROUP

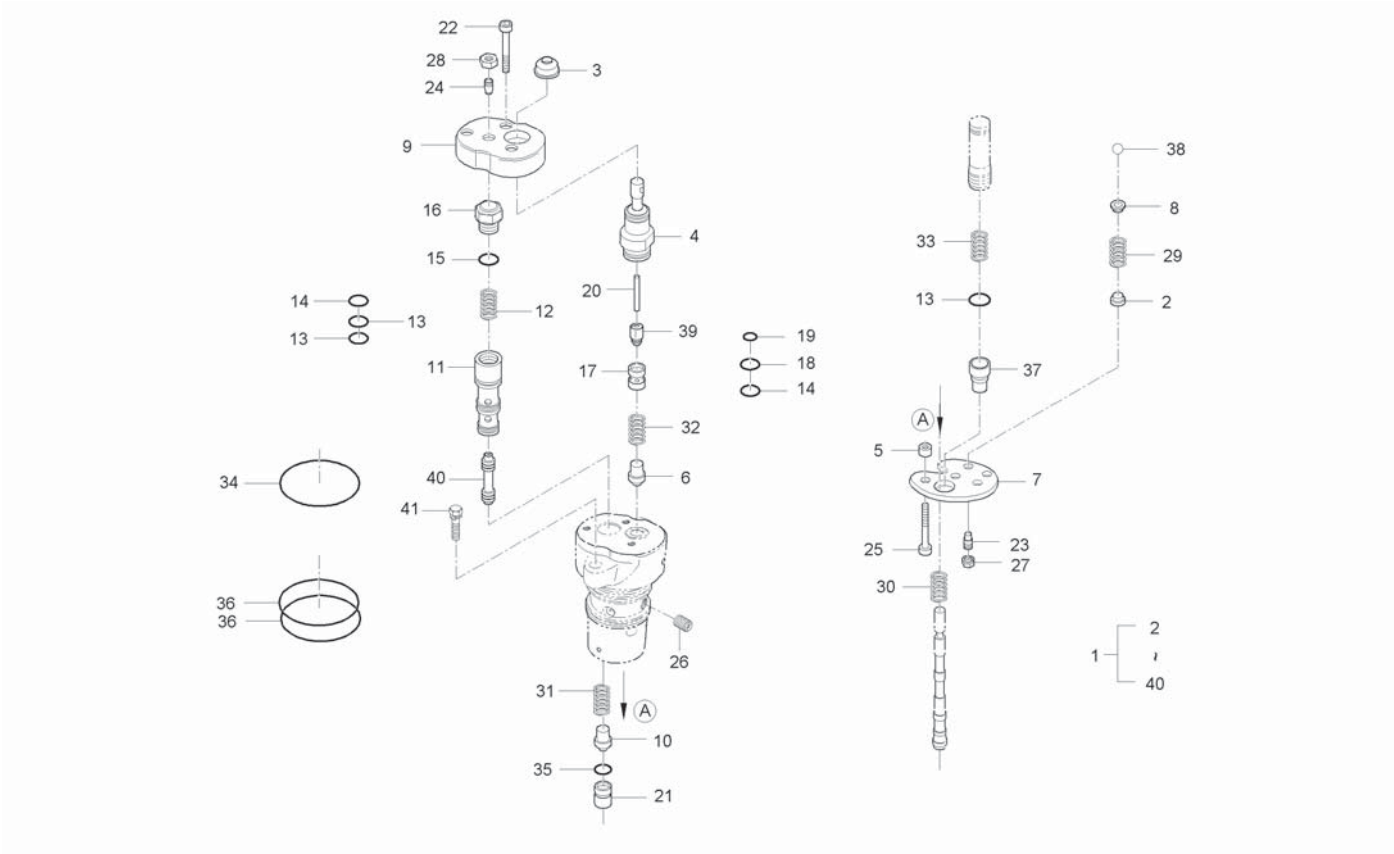

A : CK35-EU , B : CK35H-EU

No.	Part Number	Desciption	Q'TY A	Q'TY B	Q'TY C	Q'TY D	Q'TY E	I.C	Remark
36	360157000	O-RING	2	2				<----	
37	440008000	PLUG	1	1					
38	450005000	BALL	1	1					
39	110004040	VALVE	1	1					
40	110002062	SPOOL, CONTROL	1	1					
41	01123-50835	BOLT, WASHER	2	2					M8X1.25

----> Old replace New
<-X-> Not interchangeable
<-O-> Interchangeable with another part(s)
<---- New replace Old
<---> Interchangeable

CK30H-T690A

HST CONTROL 2 GROUP

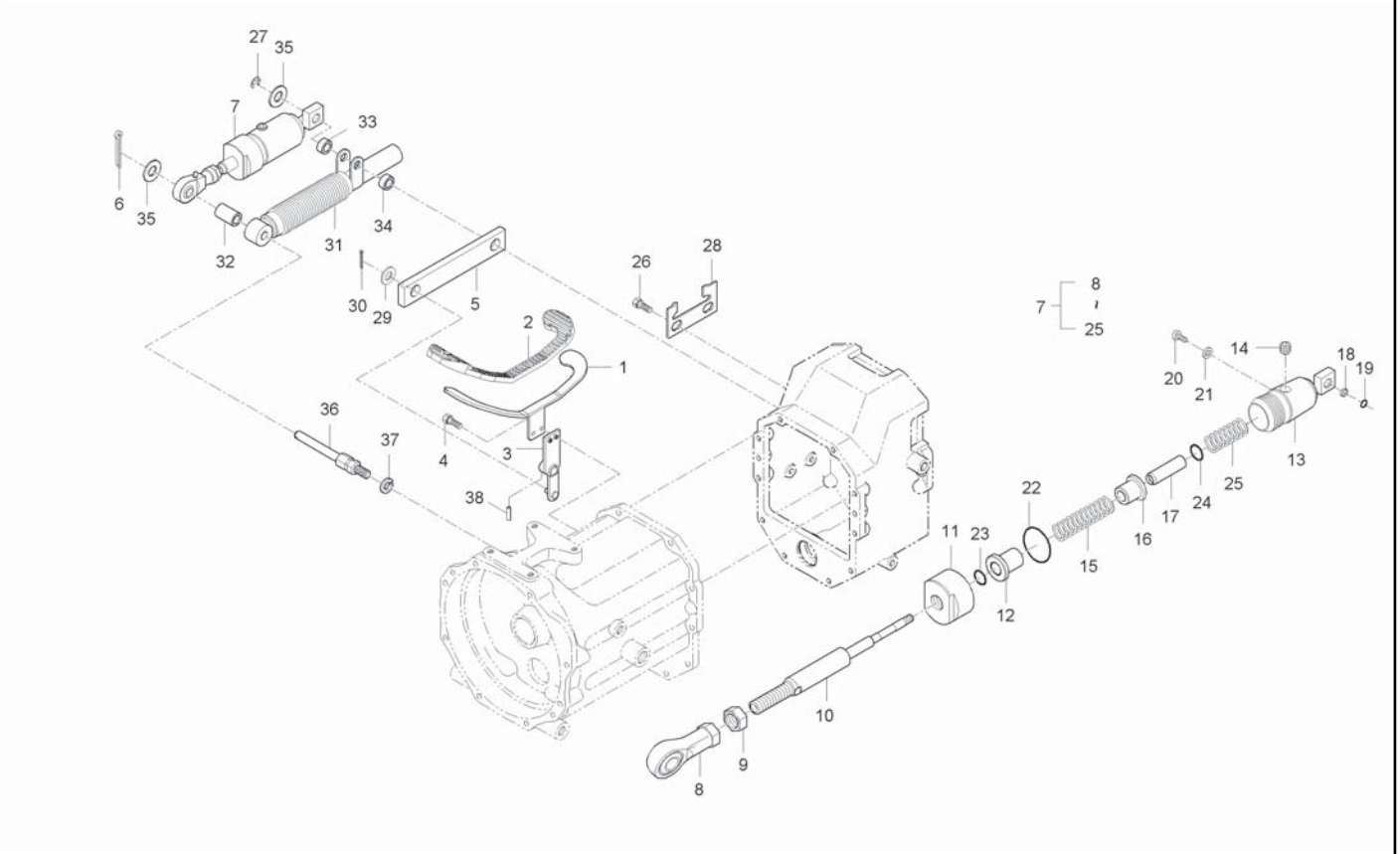

A : CK35-EU , B : CK35H-EU

No.	Part Number	Desciption	Q'TY A	Q'TY B	Q'TY C	Q'TY D	Q'TY E	I.C	Remark
1	T2195-31111	PEDAL, HST		1 ~GT8900058					
1	T2195-31112	PEDAL, HST		1 ~HT8900076				<-X->	
2	T2195-31122	RUBBER, PEDAL		1					
2	T2195-31112BB	PEDAL, HST		1				<-X->	
3	T2195-31132	HOLDER, PEDAL		1					
3	T2195-31133	HOLDER, PEDAL		1				<-X->	
4	01123-50822	BOLT		2					M8XP1.25
5	T2195-32141	PLATE, CONNECTING		1					
5	T2195-32142	PLATE, CONNECTING		1				<--->	
6	05511-50320	PIN, SPLIT		1					M3.2*20
7	T2195-33611	CYL.ASS'Y,DAMPER		1					
7	T2195-32612	DAMPER CYLINDER ASSY		1				<----	
7	T2185-33611	CYL.ASS'Y,DAMPER		1				<--->	
8	T2360-32621	BALL JOINT		1 ~HT8900076					
8	3DG4-00025	JOINT, BALL		1 JT8900001~				<-O->	
9	02156-50080	NUT		1 ~HT8900076					M8XP1.25
9	31N1-08100	NUT		1 JT8900001~				<-O->	
9	T2198-33141BB	ARM		1				<-X->	
10	T2195-32631	SHAFT, A		1 ~HT8900076					

----> Old replace New
<-X-> Not interchangeable
<-O-> Interchangeable with another part(s)
<---- New replace Old
<---> Interchangeable

CK30H-T690A

HST CONTROL 2 GROUP

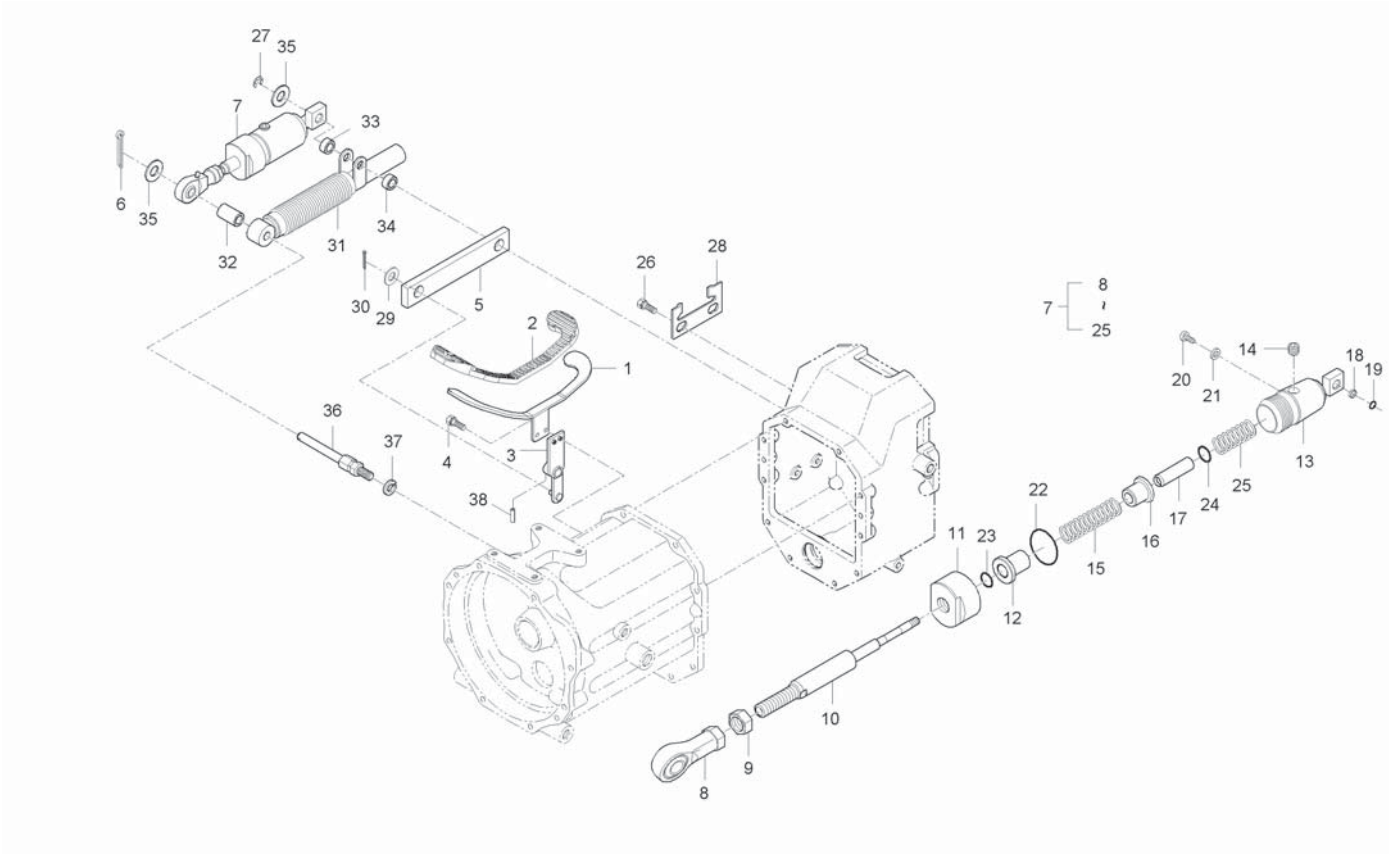

A : CK35-EU , B : CK35H-EU

No.	Part Number	Desciption	Q'TY A	Q'TY B	Q'TY C	Q'TY D	Q'TY E	I.C	Remark
10	3DG4-12121	SHAFT A		1 JT8900001~				<-0->	
10	3DG4-10121	SHAFT		1				<--->	
11	T2360-32641	CAP, B		1 ~HT8900076					
11	3DG4-00028	CAP(B)		1 JT8900001~				<-0->	
11	3DG4-00061	CAP(B)		1				<--->	
12	T2360-32651	GUIDE, A		1					
12	T2195-32651	GUIDE, A		1 ~HT8900076				<----	
12	3DG4-00060	GUIDE(A)		1				<--->	
13	3DG4-00062	TUBE		1					
14	31SB-01040	PLUG		1					
15	3DS1-22000	FRICTION SPRING		1					
16	3DG4-00059	GUIDE B		1					
17	3DG4-12605	SHAFT B		1					
18	32O1-12024	O RING		1					
19	3DH4-12000	BACK-UP RING		1					
20	T2360-32731	BOLT, OIL DRAIN		1					
21	3DG4-00030	HEAD COVER		1					
22	3DG4-00031	PLATE		1					
23	32O1-P10A	O RING		1					

----> Old replace New
<-X-> Not interchangeable
<-0-> Interchangeable with another part(s)
<---- New replace Old
<---> Interchangeable

CK30H-T690A

HST CONTROL 2 GROUP

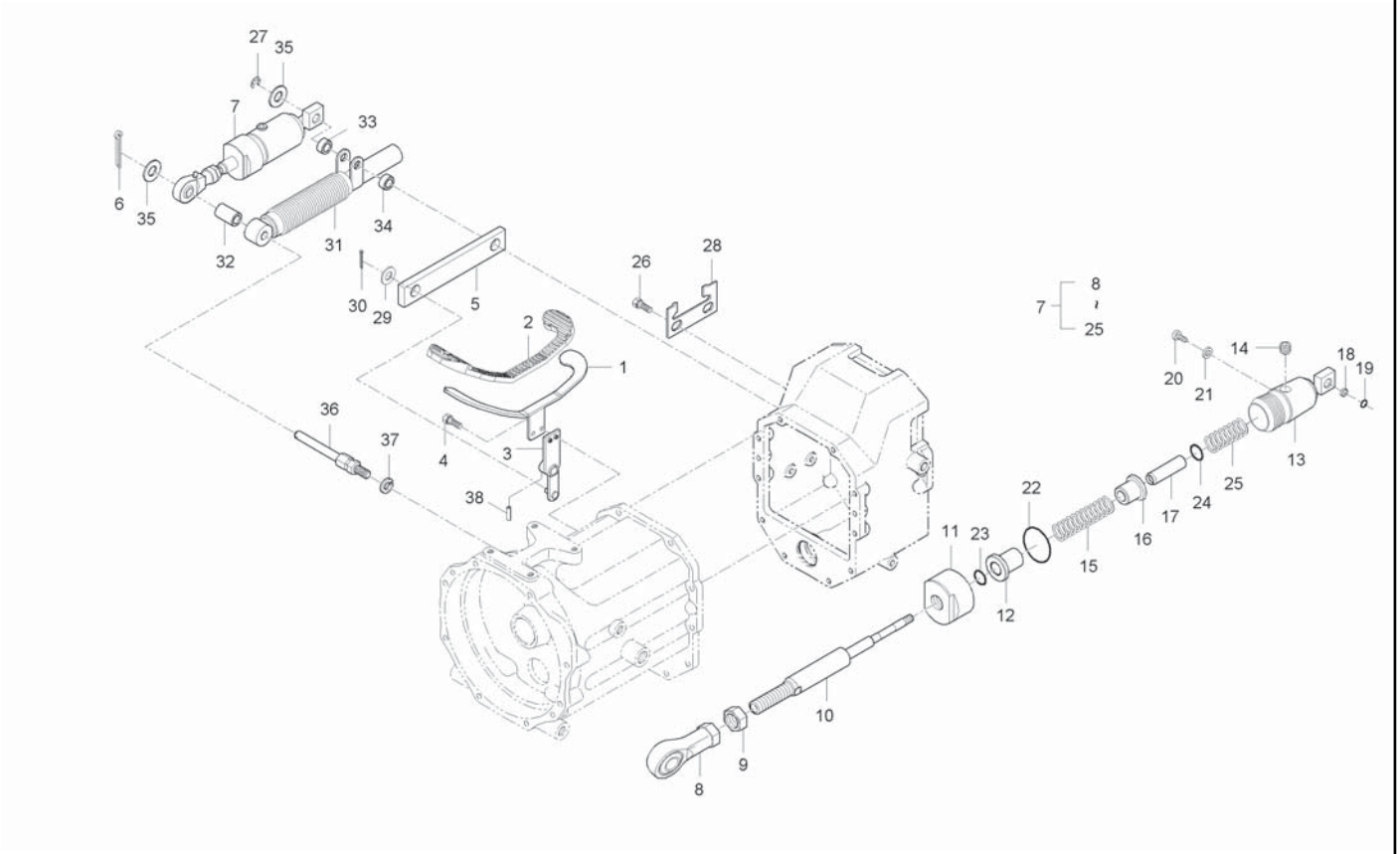

A : CK35-EU , B : CK35H-EU

No.	Part Number	Desciption	Q'TY A	Q'TY B	Q'TY C	Q'TY D	Q'TY E	I.C	Remark
24	3DH4-100000	BACK-UP RING		1					
25	3DS1-14000	FRICTION SPRING		1					
26	01135-51020	BOLT, WASHER		2					M10*1.25
27	04613-50060	SNAP RING		1					
28	T2195-32132	PLATE, ADJUSTMENT		1					
29	04011-50100	WASHER, PLAIN		1					M10
30	05511-50215	PIN, SPLIT		1					
31	P5370-32511	DEMPER ASSY		1					
32	T2360-34141	SPACER		1					
33	T2360-34151	SPACER		1					
34	T2360-34161	SPACER		1					
35	04013-50080	WASHER		2					M8
36	T2195-32241	SHAFT		1					
37	04512-50080	SPRING WASHER		1					M08
38	05411-00628	PIN, SPRING		1					
38	T2610-39572	SCREW, HOLDER		1				<-X->	

----> Old replace New
<-X-> Not interchangeable
<-O-> Interchangeable with another part(s)
<---- New replace Old
<---> Interchangeable

CT230H-T690A

HST CONTROL 2 GROUP

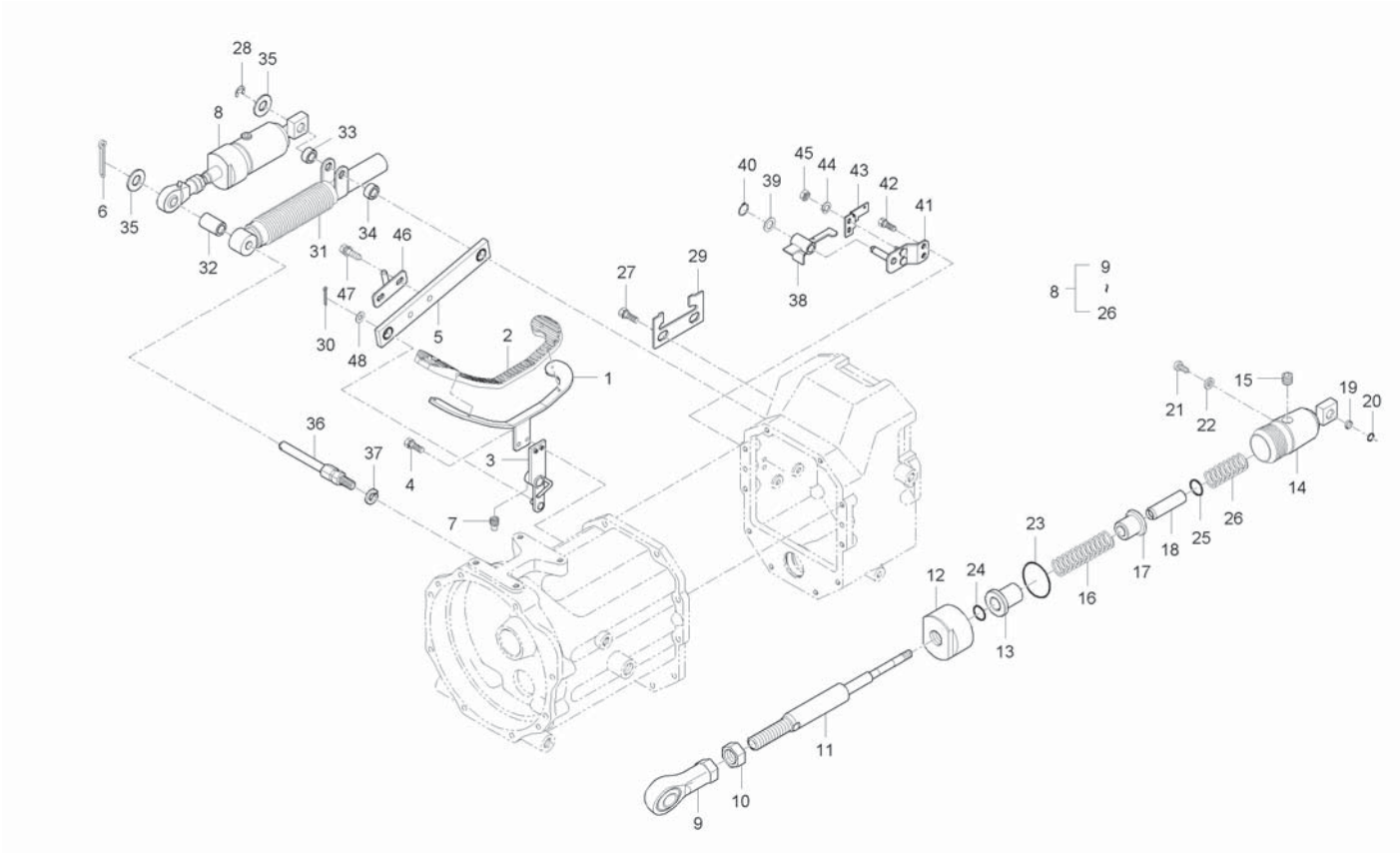

A : CK35-EU , B : CK35H-EU

No.	Part Number	Desciption	Q'TY A	Q'TY B	Q'TY C	Q'TY D	Q'TY E	I.C	Remark
1	T2195-31112BB	PEDAL, HST		1					
2	T2195-31122	RUBBER, PEDAL		1					
3	T2198-31131	HOLDER, PEDAL		1					
4	01123-50822	BOLT		2					M8XP1.25
5	T2198-32142	PLATE, CONNECTING		1					
6	05511-50320	PIN, SPLIT		1					M3.2*20
7	T2610-39572	SCREW, HOLDER		1					
8	T2195-32612	DAMPER CYLINDER ASSY		1					
8	T2195-33611	CYL.ASS'Y,DAMPER		1				<--->	
8	T2185-33611	CYL.ASS'Y,DAMPER		1				<--->	
9	T2360-32621	BALL JOINT		1					
9	3DG4-00025	JOINT, BALL		1				<-0->	
10	02156-50080	NUT		1					M8XP1.25
10	31N1-08100	NUT		1				<-0->	
11	T2195-32631	SHAFT, A		1					
11	3DG4-12121	SHAFT A		1				<-0->	
11	3DG4-10121	SHAFT		1				<--->	
12	T2360-32641	CAP, B		1					
12	3DG4-00028	CAP(B)		1				<-0->	

----> Old replace New
<-X-> Not interchangeable
<-0-> Interchangeable with another part(s)
<---- New replace Old
<---> Interchangeable

CT230H-T690A

HST CONTROL 2 GROUP

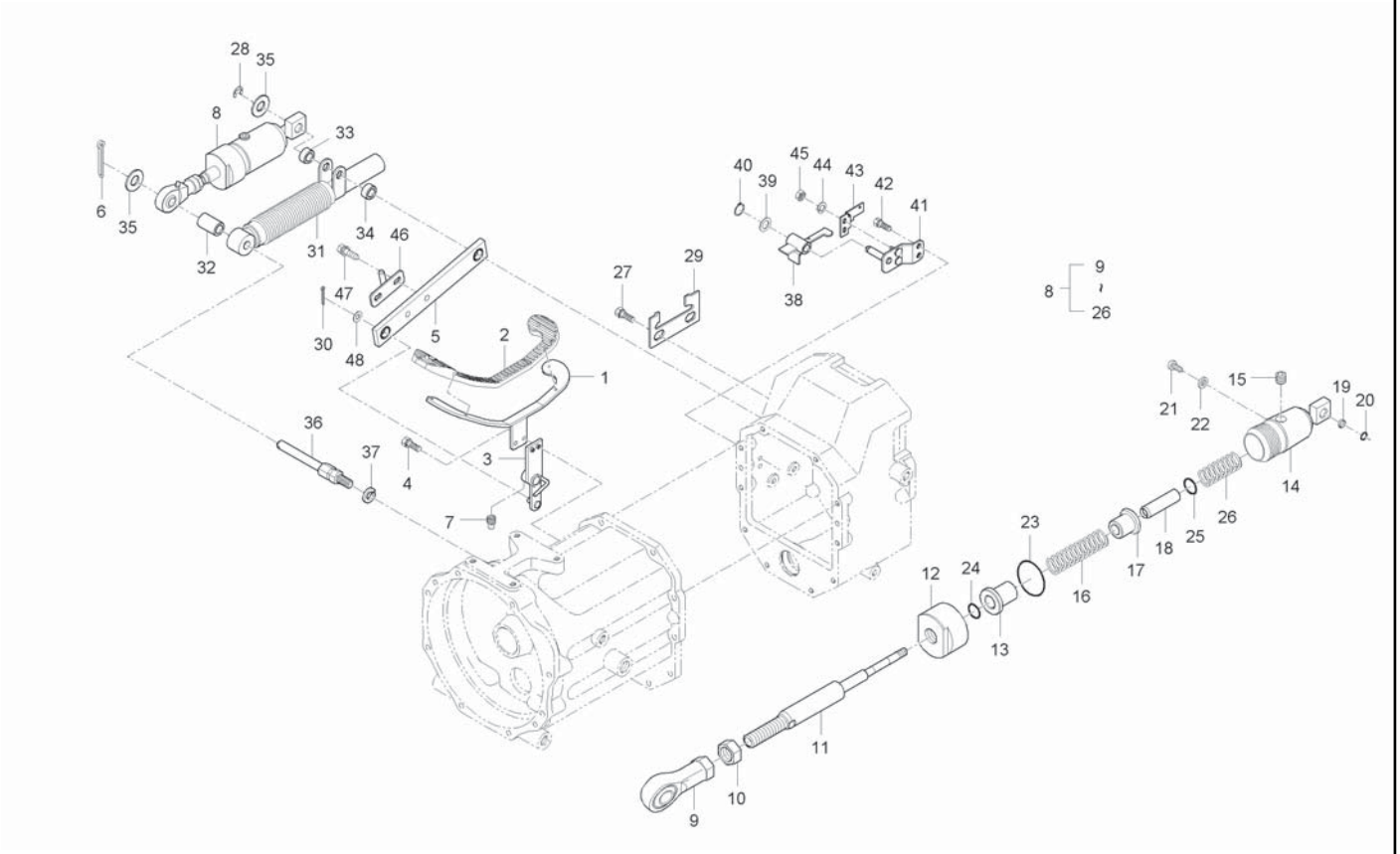

A : CK35-EU , B : CK35H-EU

No.	Part Number	Desciption	Q'TY A	Q'TY B	Q'TY C	Q'TY D	Q'TY E	I.C	Remark
12	3DG4-00061	CAP(B)		1				<--->	
13	T2195-32651	GUIDE, A		1					
13	3DG4-00026	GUIDE(A)		1				<-0->	
13	3DG4-00060	GUIDE(A)		1				<--->	
14	T2195-32661	CAP, A		1					
14	3DG4-23340	TUBE		1				<-0->	
14	3DG4-00062	TUBE		1				<--->	
15	15521-9602-2	PLUG		1					
15	31SB-01040	PLUG		1				<--->	
16	T2360-32681	SPRING		1					
16	3DS1-22000	FRICTION SPRING		1				<-0->	
17	T2195-32692	GUIDE, B		1					
17	3DG4-00027	GUIDE B		1				<-0->	
17	3DG4-00059	GUIDE B		1				<--->	
18	T2195-32701	SHAFT, B		1					
18	3DG4-12605	SHAFT B		1				<-0->	
19	T2360-32711	COLLAR		1					
19	32O1-12024	O RING		2				<-0->	
19	32O1-12024	O RING		1				<--->	

----> Old replace New
<-X-> Not interchangeable
<-0-> Interchangeable with another part(s)
<---- New replace Old
<---> Interchangeable

CT230H-T690A

HST CONTROL 2 GROUP

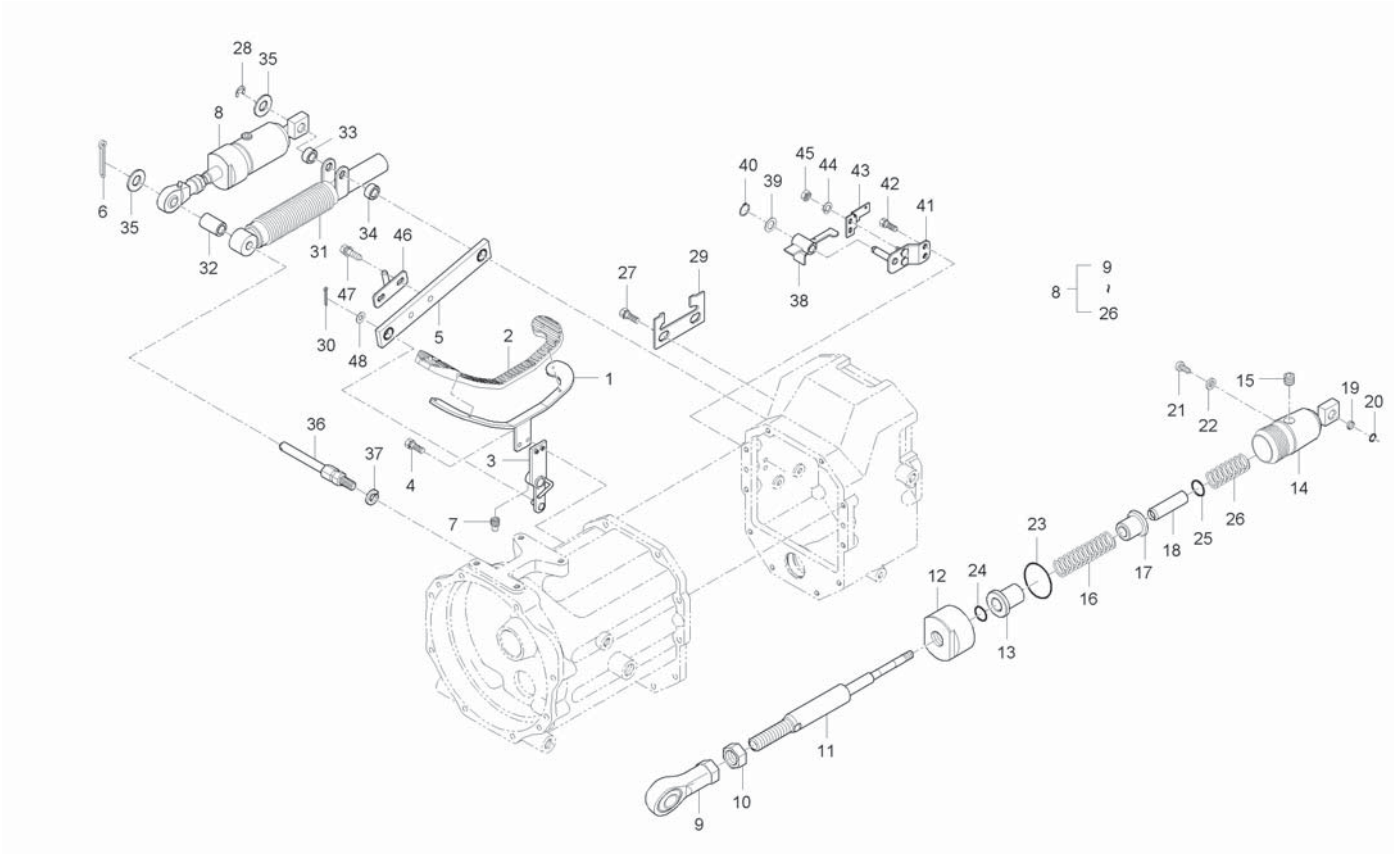

A : CK35-EU , B : CK35H-EU

No.	Part Number	Desciption	Q'TY A	Q'TY B	Q'TY C	Q'TY D	Q'TY E	I.C	Remark
20	3DH4-12000	BACK-UP RING		1					
21	T2360-32731	BOLT, OIL DRAIN		1					
21	3DU4-08800	HUSH DU		1				<-0->	
22	04717-00500	WASHER, SEAL		1					
22	3DG4-00030	HEAD COVER		1				<-0->	
23	04811-00120	O RING		2					
23	3DG4-00031	PLATE		1				<-0->	
24	32O1-P10A	O RING		1					
25	3DH4-100000	BACK-UP RING		1					
26	3DS1-14000	FRICTION SPRING		1					
27	01133-51020	BOLT, WASHER		2					M10*P1.25
27	01135-51020	BOLT, WASHER		2				<--->	M10*1.25
28	04613-50060	SNAP RING		1					
29	T2195-32132	PLATE, ADJUSTMENT		1					
30	05511-50215	PIN, SPLIT		1					
31	T2360-32511	DEMPER ASSY		1					
31	P5370-32511	DEMPER ASSY		1				<--->	
32	T2360-34141	SPACER		1					
33	T2360-34151	SPACER		1					

----> Old replace New
<-X-> Not interchangeable
<-O-> Interchangeable with another part(s)
<---- New replace Old
<---> Interchangeable

CT230H-T690A

HST CONTROL 2 GROUP

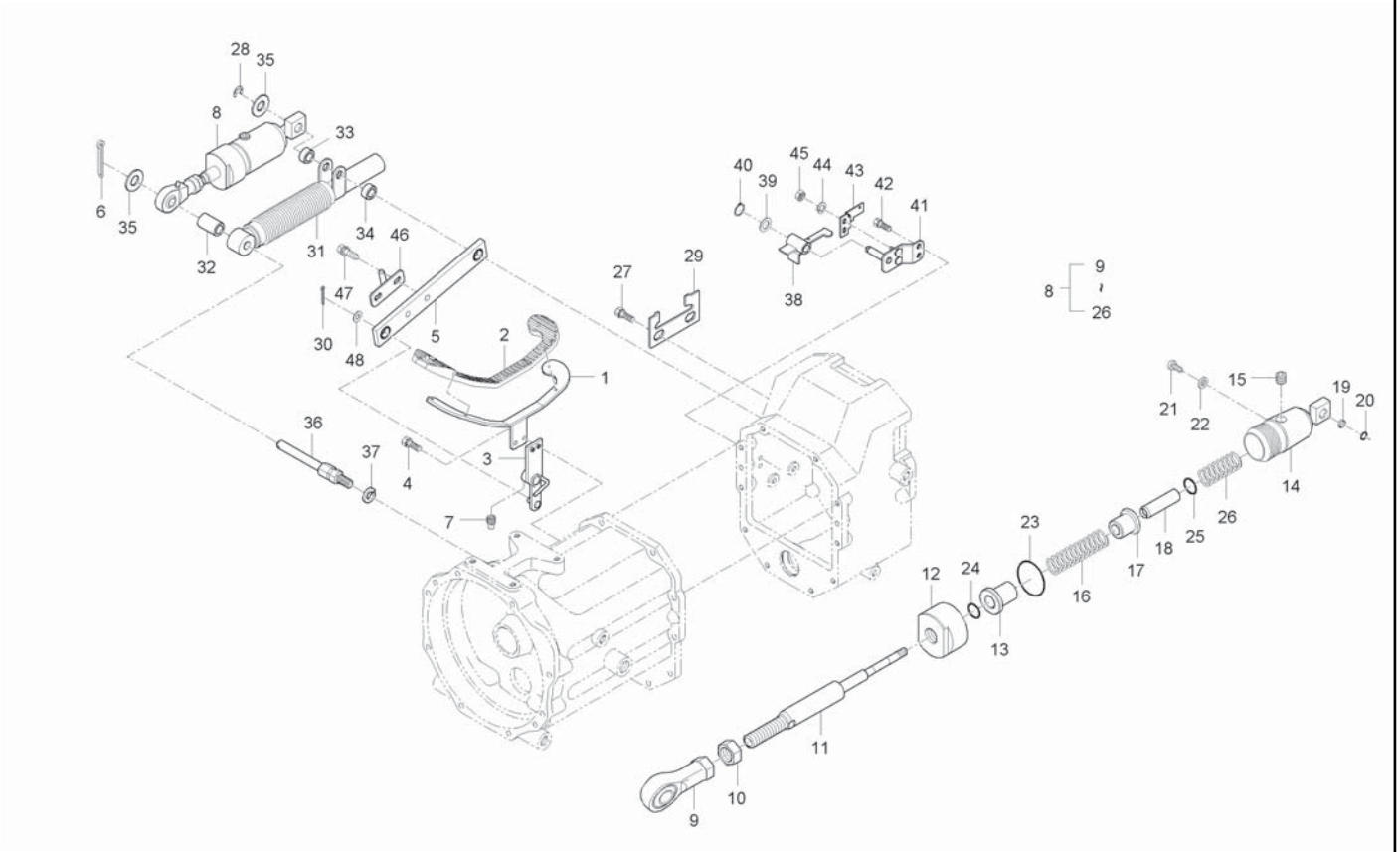

A : CK35-EU , B : CK35H-EU

No.	Part Number	Desciption	Q'TY A	Q'TY B	Q'TY C	Q'TY D	Q'TY E	I.C	Remark
34	T2360-34161	SPACER		1					
35	04013-50080	WASHER		2					M8
36	T2195-32241	SHAFT		1					
37	04512-50080	SPRING WASHER		1					M08
38	T2198-35112	BRACKET 2, SWITCH		1					
39	04011-50100	WASHER, PLAIN		1					M10
40	04612-00100	SNAP RING		1					
41	T2368-35122	BRACKET 2, SWITCH		1					
42	01123-50816	BOLT, WASHER		2					M8*P1.25
43	T2368-35131	BRACKET 3, SWITCH		1					
43	T2368-35132	BRACKET 3, SWITCH		1				<--->	
44	04512-50060	WASHER, SPRING		2					M6
45	02056-50060	NUT		2					M6*P1.0
46	T2368-35141	BRACKET 4, SWITCH		1					
47	01023-50610	BOLT, WASHER		2					M6*1
47	01025-50612	BOLT, WASHER		2				<--->	M6P1.0
48	04011-50100	WASHER, PLAIN		1					M10

----> Old replace New
<-X-> Not interchangeable
<-O-> Interchangeable with another part(s)
<---- New replace Old
<---> Interchangeable

CK30H-T700A

HST CONTROL 3 GROUP

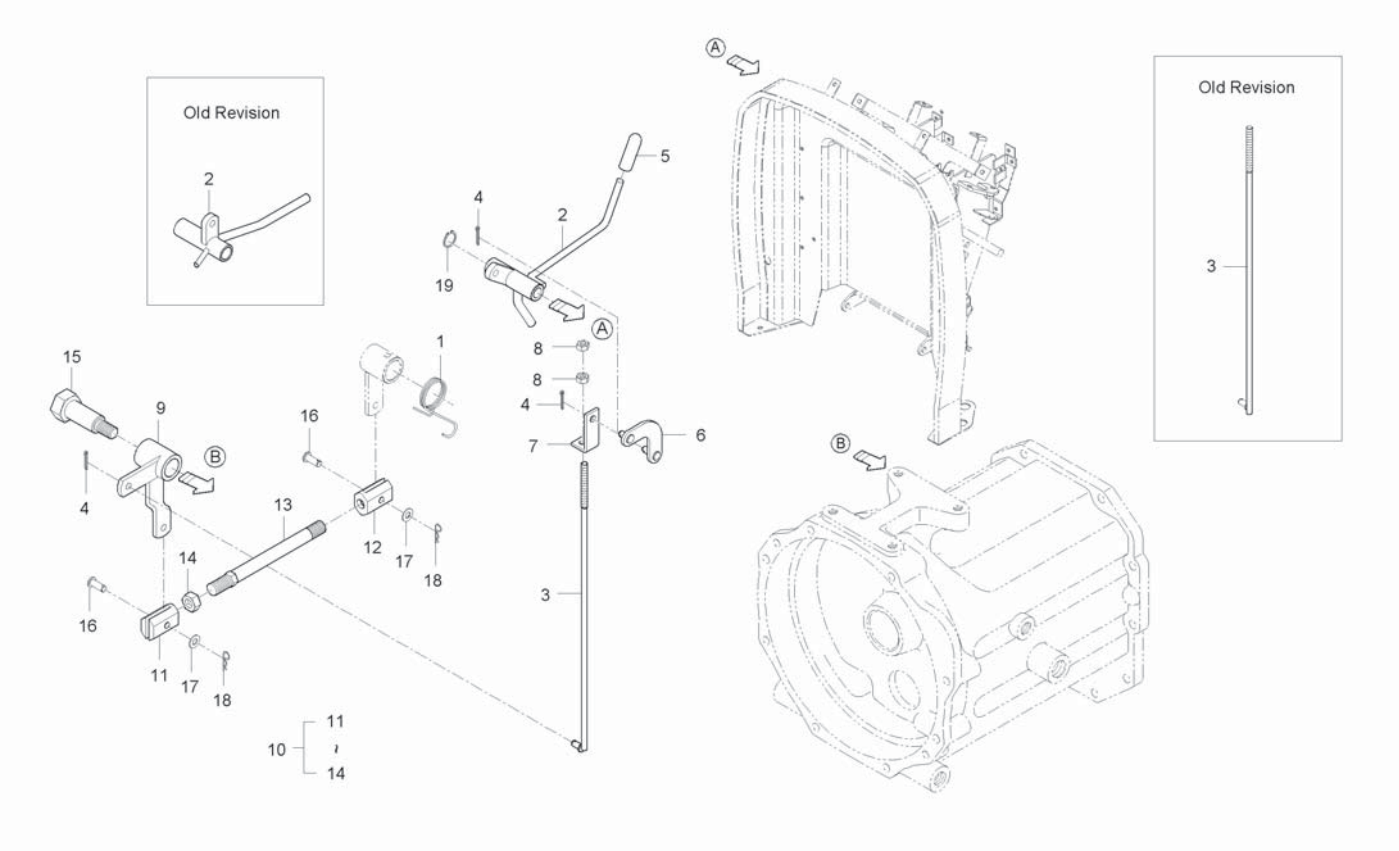

A : CK35-EU , B : CK35H-EU

No.	Part Number	Desciption	Q'TY A	Q'TY B	Q'TY C	Q'TY D	Q'TY E	I.C	Remark
1	T2360-32353	SPRING, 2		1					
2	T2195-33111	LEVER, FIXING		1					
2	T2195-33112	LEVER, FIXING		1				<----	
2	T2195-33113	LEVER, FIXING		1 ~HT8900076				<----	
2	T2195-33113BB	LEVER, FIXING		1				<----	
3	T2195-33161	ROD, 2		1					
3	T2195-33162	ROD, 2		1				<--->	
4	05511-51615	PIN, SPLIT		2					
5	T2360-33192	GRIP, HST FIXING		1					
6	T2360-33123	LINK		1					
6	T2198-33121	LINK ASSY		1				<----	
7	T2360-33131	PLATE		1					
8	02056-50060	NUT		2					M6*P1.0
9	T2195-33144	ARM		1					
9	T2198-33141	ARM		1 ~HT8900076				<----	
10	T2195-33201	ROD, CONNECTING HST		1					
11	T2350-25891001	ROD, 1		1					
12	T2350-25891002	ROD, 2		1					
13	T2195-33201003	BAR		1					

----> Old replace New
<-X-> Not interchangeable
<-O-> Interchangeable with another part(s)
<---- New replace Old
<---> Interchangeable

CK30H-T700A

HST CONTROL 3 GROUP

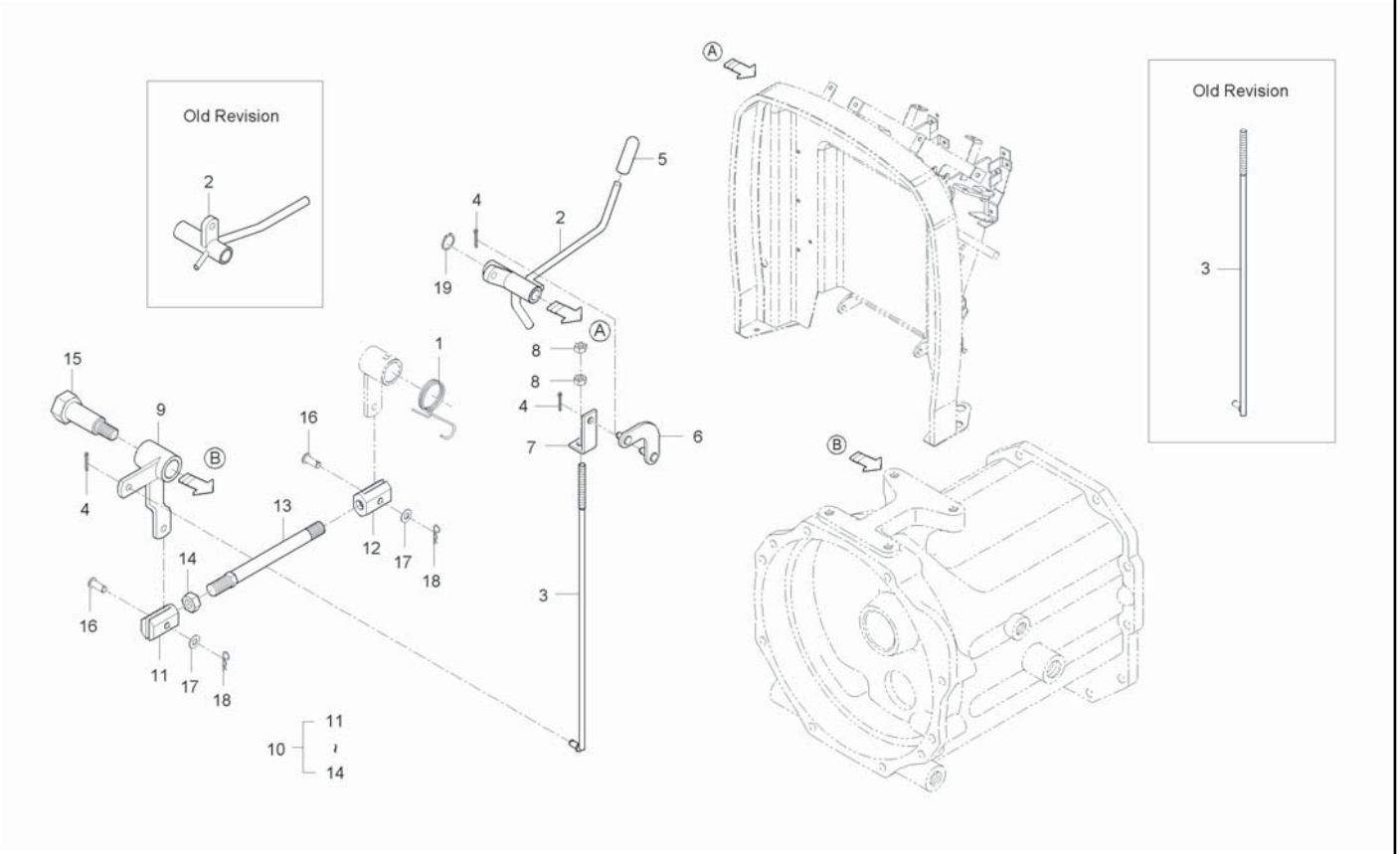

A : CK35-EU , B : CK35H-EU

No.	Part Number	Desciption	Q'TY A	Q'TY B	Q'TY C	Q'TY D	Q'TY E	I.C	Remark
14	02114-50080	NUT		2					M8*P1.25
15	T2195-33171	BOLT, CLAMPING		1					
16	05122-50825	JOINT PIN		2					
17	04012-50080	WASHER, PLAIN		2					DIA18*T1.2
18	05515-50800	PIN, SNAP		2					M8
19	04612-50120	SNAP RING		1					

----> Old replace New
<-X-> Not interchangeable
<-O-> Interchangeable with another part(s)
<---- New replace Old
<---> Interchangeable

CK30M-T710A

GEAR PUMP GROUP

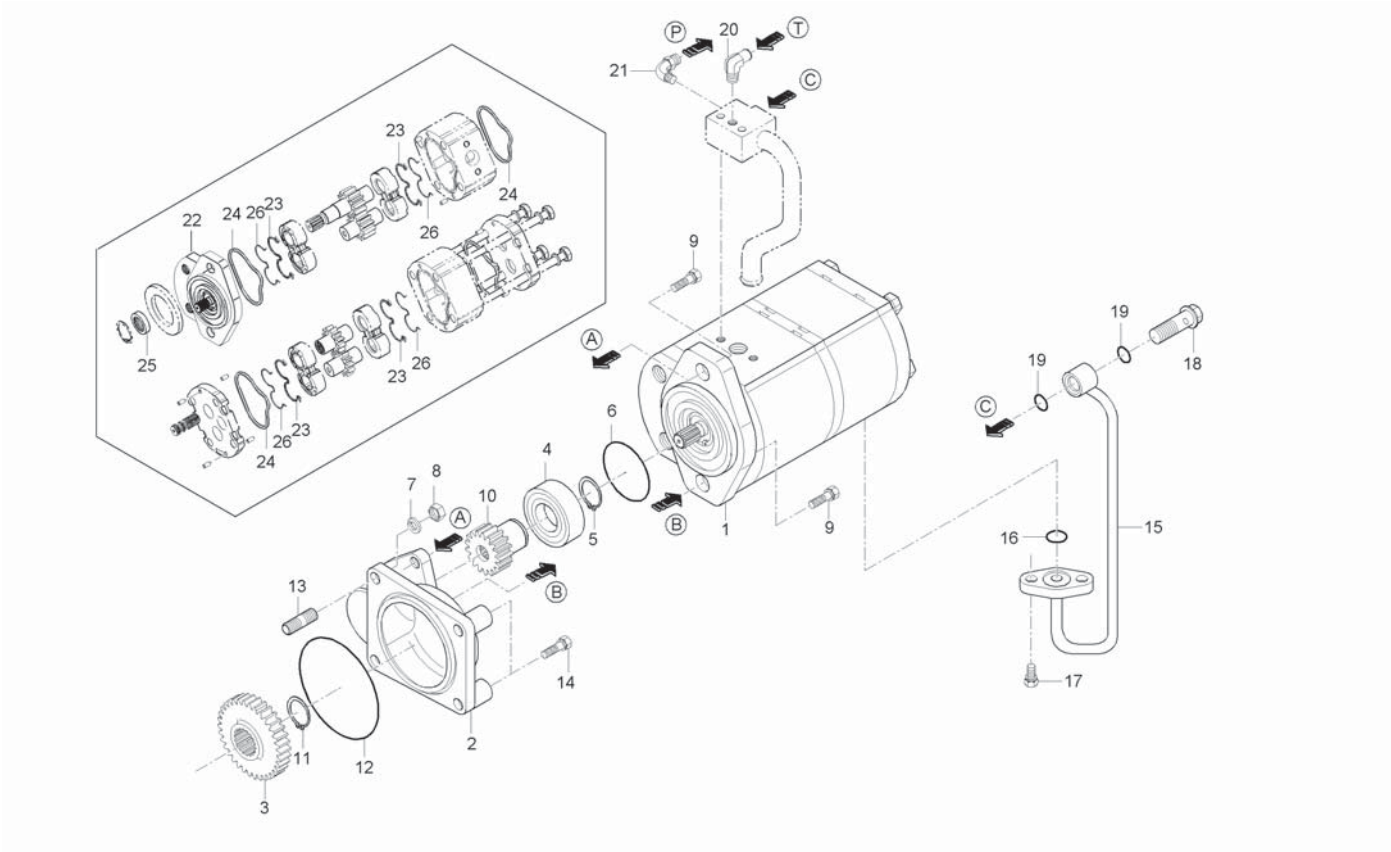

A : CK35-EU , B : CK35H-EU

No.	Part Number	Desciption	Q'TY A	Q'TY B	Q'TY C	Q'TY D	Q'TY E	I.C	Remark
1	T2185-76101	GEAR PUMP ASSY	1						
1	T2185-76102	GEAR PUMP ASSY	1	1				<--->	
1	T2195-76001	ASS'Y PUMP, HYDRAULIC O/P	1	1				<--->	
2	T4620-76002	HOLDER, GEAR PUMP	1	1					
3	T2185-76021	GEAR, 34	1	1					
4	08241-05205	BALL BEARING	1	1					
5	04612-00250	SNAP RING	1	1					
6	04811-10800	O RING	1	1					
7	04512-50080	SPRING WASHER	2	2					M08
8	02114-50080	NUT	2	2					M8*P1.25
8	02156-50080	NUT	2	2				<--->	M8XP1.25
9	01133-51035	BOLT, WASHER	2	2					M10X1.25
10	T4620-76031	GEAR, 17	1	1					
11	15471-9536-1	SNAP RING	1	1					
12	04811-10850	O RING	1	1					
13	01513-50822	STUD	2	2					M8*1.25
14	01123-50845	BOLT, WASHER	2	2					M8*P1.25
15	T2185-45043	TUBE 1, STEERING	1	1					
15	T2185-45044	TUBE 1, STEERING	1 ~HT8100029	1 ~HT8900076				<--->	

----> Old replace New
<-X-> Not interchangeable
<-O-> Interchangeable with another part(s)
<---- New replace Old
<---> Interchangeable

CK30M-T710A

GEAR PUMP GROUP

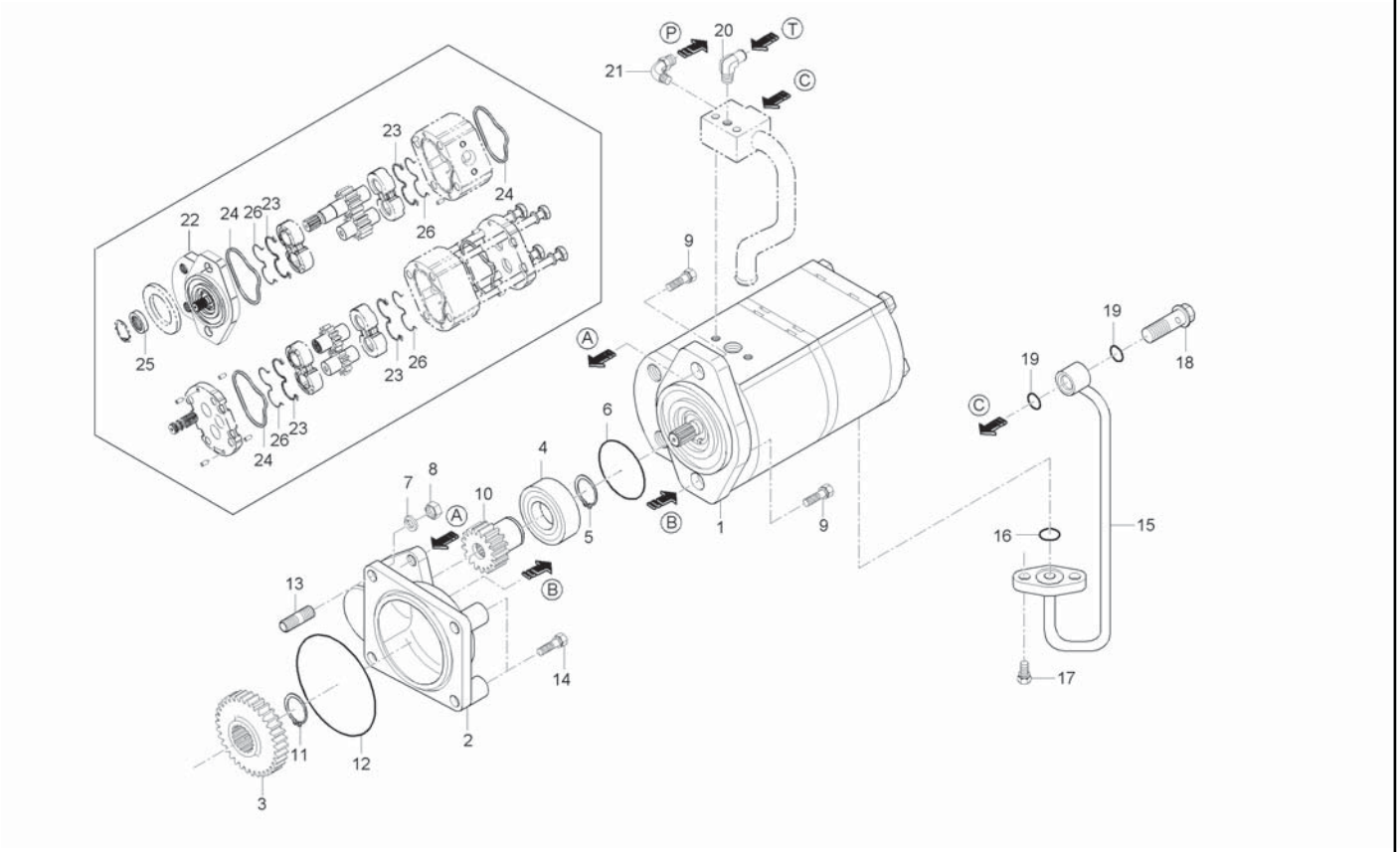

A : CK35-EU , B : CK35H-EU

No.	Part Number	Desciption	Q'TY A	Q'TY B	Q'TY C	Q'TY D	Q'TY E	I.C	Remark
15	T2185-45044BB	TUBE 1, STEERING	1 HT8100030~	1 JT8900001~				<-X->	
16	04810-00180	O RING	1	1					
17	01123-50820	BOLT, WASHER	2	2					M8*P1.25
17	01123-50825	BOLT, WASHER	2	2				<--->	M8*P1.25
18	T2360-37151	JOINT BOLT, OIL COOLER	1	1					
19	04810-00180	O RING	2	2					
20	T2185-66151	ELBOW	1	1					
21	56713-2813-1	ADAPTER 1, CYL	1	1					
22	21911312	COVER,FRONT	1 ~GT8100064						
22	21911313	COVER,FRONT	1 GT8100065~	1				<-O->	
23	39656100	SEAL	4	4					
24	39666200	SEAL	4	4					
25	39700000	SEAL, SHAFT	1 ~GT8100064						
25	39800000	SEAL, SHAFT	1 GT8100065~	1				<-O->	
26	41387100	BACK UP RING	1	1					

----> Old replace New
<-X-> Not interchangeable
<-O-> Interchangeable with another part(s)
<---- New replace Old
<---> Interchangeable

CK30H-T720-1A

INLET TUBE GROUP

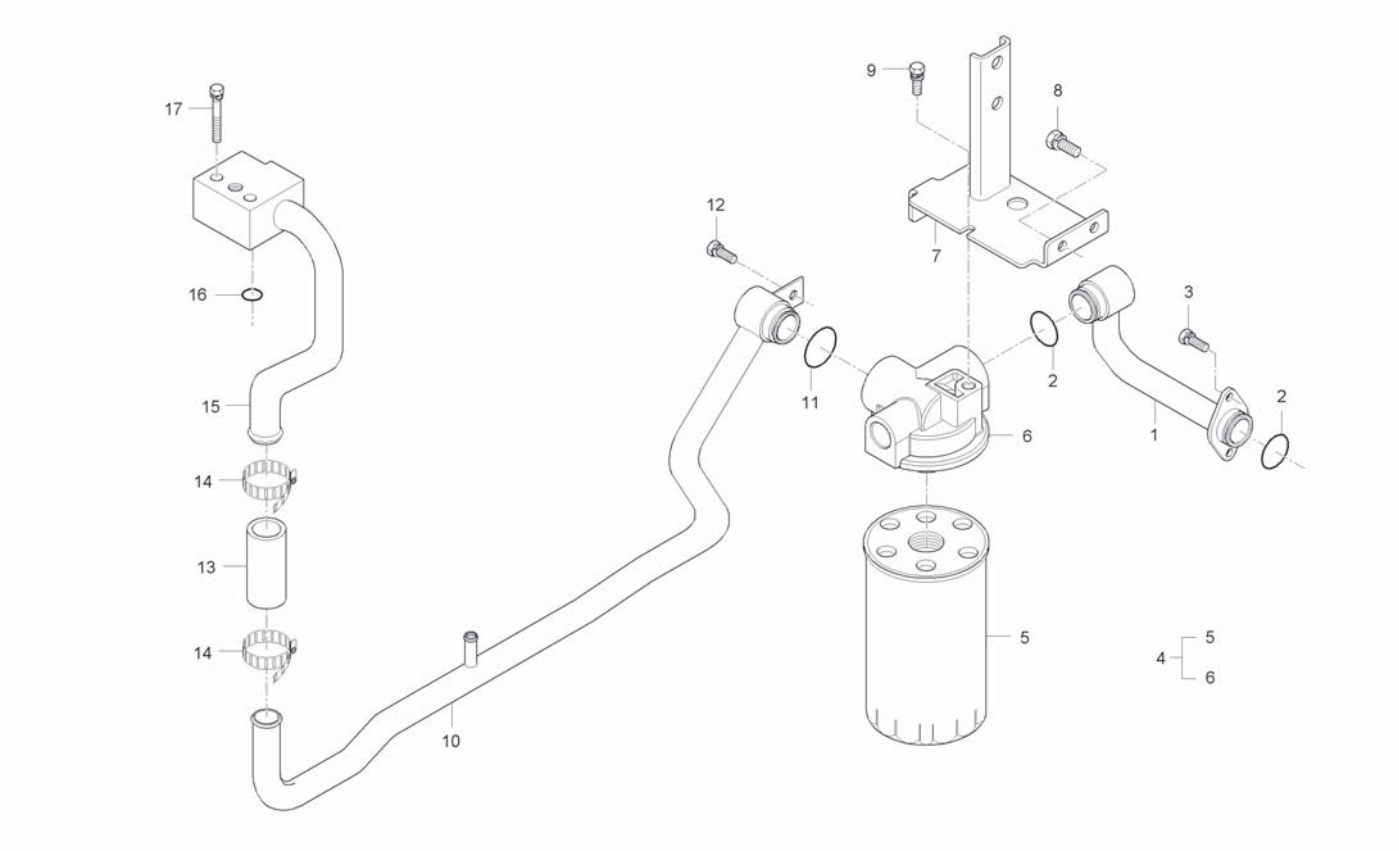

A : CK35-EU , B : CK35H-EU

No.	Part Number	Desciption	Q'TY A	Q'TY B	Q'TY C	Q'TY D	Q'TY E	I.C	Remark
1	T2185-38002	TUBE 1, INPUT		1					
1	T2185-38003	TUBE 1, INPUT		1 ~HT8900076				<--->	
2	04811-00320	O RING		2					(P32)
2	04810-00320	O RING		2				<--->	
3	01123-50820	BOLT, WASHER		2					M8*P1.25
4	T2195-38111	FILTER ASS'Y-HYD.		1					
5	T2185-38031	FILTER, HYDRAULIC		1					
6	T2195-38041	BRACKET, FILTER HST		1					
7	T2195-38062	SUPPORT, FILTER		1 ~HT8900076					
8	01133-51020	BOLT, WASHER		2					M10*P1.25
9	01125-50820	BOLT, WASHER		1					M8*P1.25
10	T2185-38113	TUBE 4, INPUT		1					
10	T2198-38111	TUBE 4, INPUT		1 ~HT8900076				<-X->	
10	T2198-38112BB	TUBE 4, INPUT		1				<-X->	
10	T2198-38113BB	TUBE 4, INPUT		1 JT8900001~				<-O->	
11	04811-00320	O RING		1					(P32)
11	04810-00320	O RING		1				<--->	
12	01123-50820	BOLT, WASHER		1					M8*P1.25
13	84612-3777-0	HOSE, RUBBER		1 ~GT8900088					

----> Old replace New
<-X-> Not interchangeable
<-O-> Interchangeable with another part(s)
<---- New replace Old
<---> Interchangeable

CK30H-T720-1A

INLET TUBE GROUP

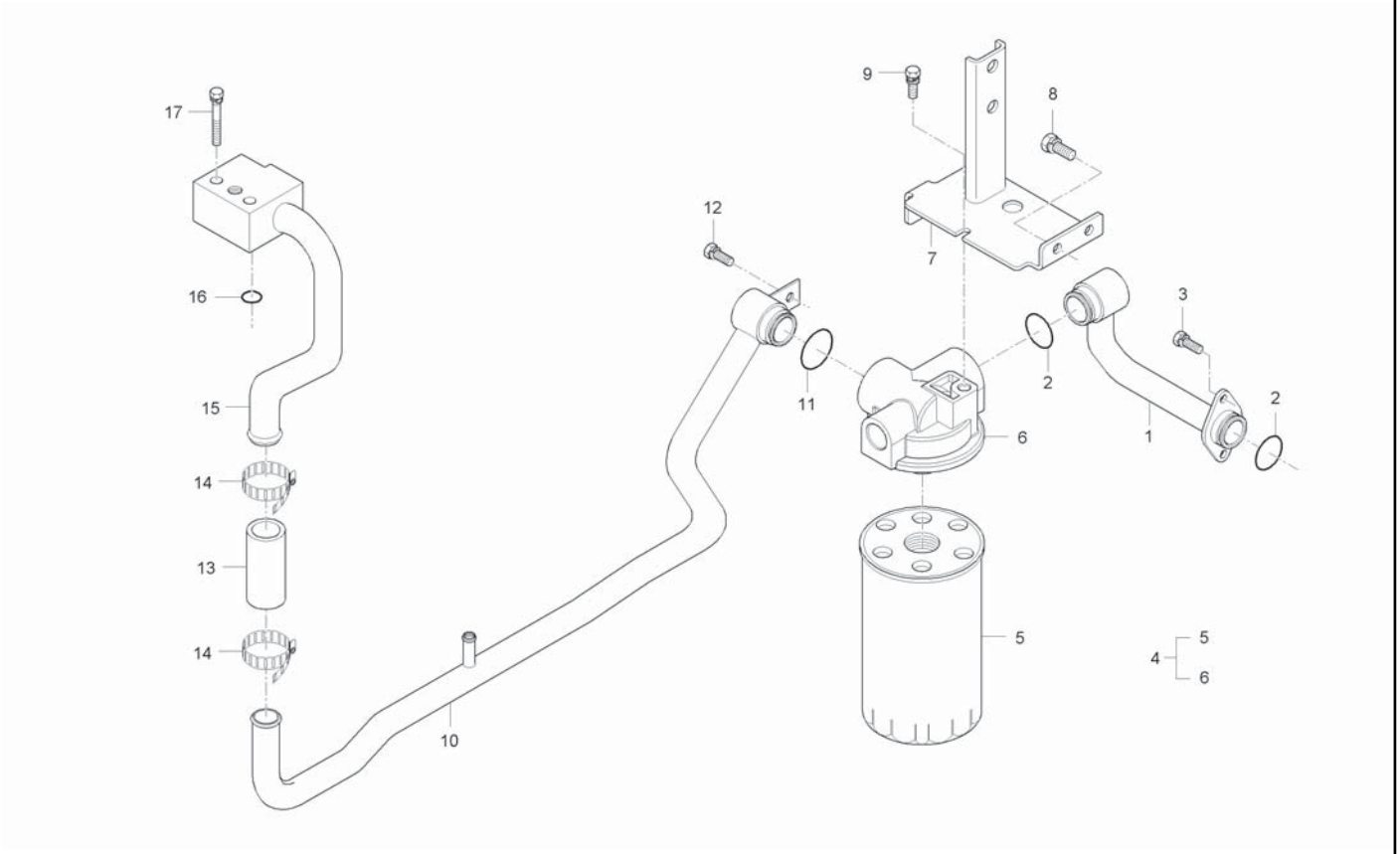

A : CK35-EU , B : CK35H-EU

No.	Part Number	Desciption	Q'TY A	Q'TY B	Q'TY C	Q'TY D	Q'TY E	I.C	Remark
13	T4125-38151	HOSE, RUBBER		1 HT8900001~				<-0->	
14	31355-3819-1	BAND, HOSE		2					
15	T2185-38071	TUBE 3, INPUT		1					
15	T2185-38072	TUBE 3, INPUT		1 ~HT8900076				<----	
15	T2185-38072BB	TUBE 3, INPUT		1 JT8900001~				<-X->	
16	04810-00200	O RING		1					
16	04810-00220	O RING		1				<----	
17	01153-50850	BOLT		2					M8*P1.25
17	01123-50850	BOLT, WASHER		2				<----	

----> Old replace New
<-X-> Not interchangeable
<-O-> Interchangeable with another part(s)
<---- New replace Old
<---> Interchangeable

CK30M-T720-1A

INLET TUBE GROUP

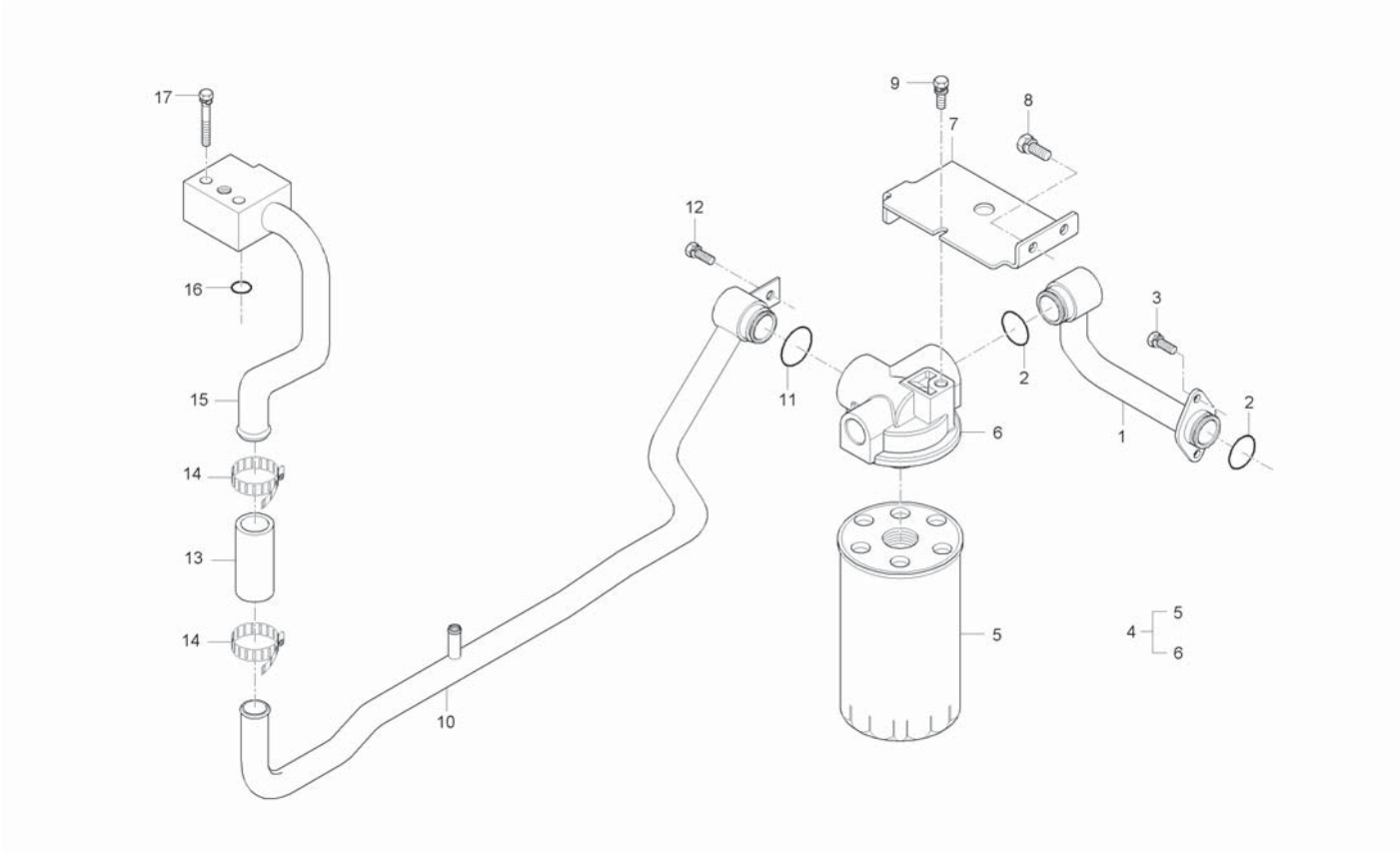

A : CK35-EU , B : CK35H-EU

No.	Part Number	Desciption	Q'TY A	Q'TY B	Q'TY C	Q'TY D	Q'TY E	I.C	Remark
1	T2185-38002	TUBE 1, INPUT	1						
1	T2185-38003	TUBE 1, INPUT	1					<--->	
2	04810-00320	O RING	2						
3	01123-50820	BOLT, WASHER	2						
4	T2185-38121	HYDRAULIC HOSE ASSY	1						
5	T2185-38031	FILTER, HYDRAULIC	1						
6	T2185-38041	BRACKET, FITTER	1						
7	T2185-38061	SUPPORT, FILTER	1						
7	T2185-38062	SUPPORT, FILTER	1					<----	
8	01133-51020	BOLT, WASHER	2						
9	01125-50820	BOLT, WASHER	1						
10	T2185-38111	TUBE 4, INPUT	1						
10	T2185-38112	TUBE 4, INPUT	1					<----	
10	T2185-38113	TUBE 4, INPUT	1					<----	
10	T2198-38113	TUBE 4, SUCTION	1					<----	
11	04810-00320	O RING	1						
12	01123-50820	BOLT, WASHER	1						
13	T4125-38151	HOSE, RUBBER	1						
14	31355-3819-1	BAND, HOSE	2						

----> Old replace New
<-X-> Not interchangeable
<-O-> Interchangeable with another part(s)
<---- New replace Old
<---> Interchangeable

CK30M-T720-1A

INLET TUBE GROUP

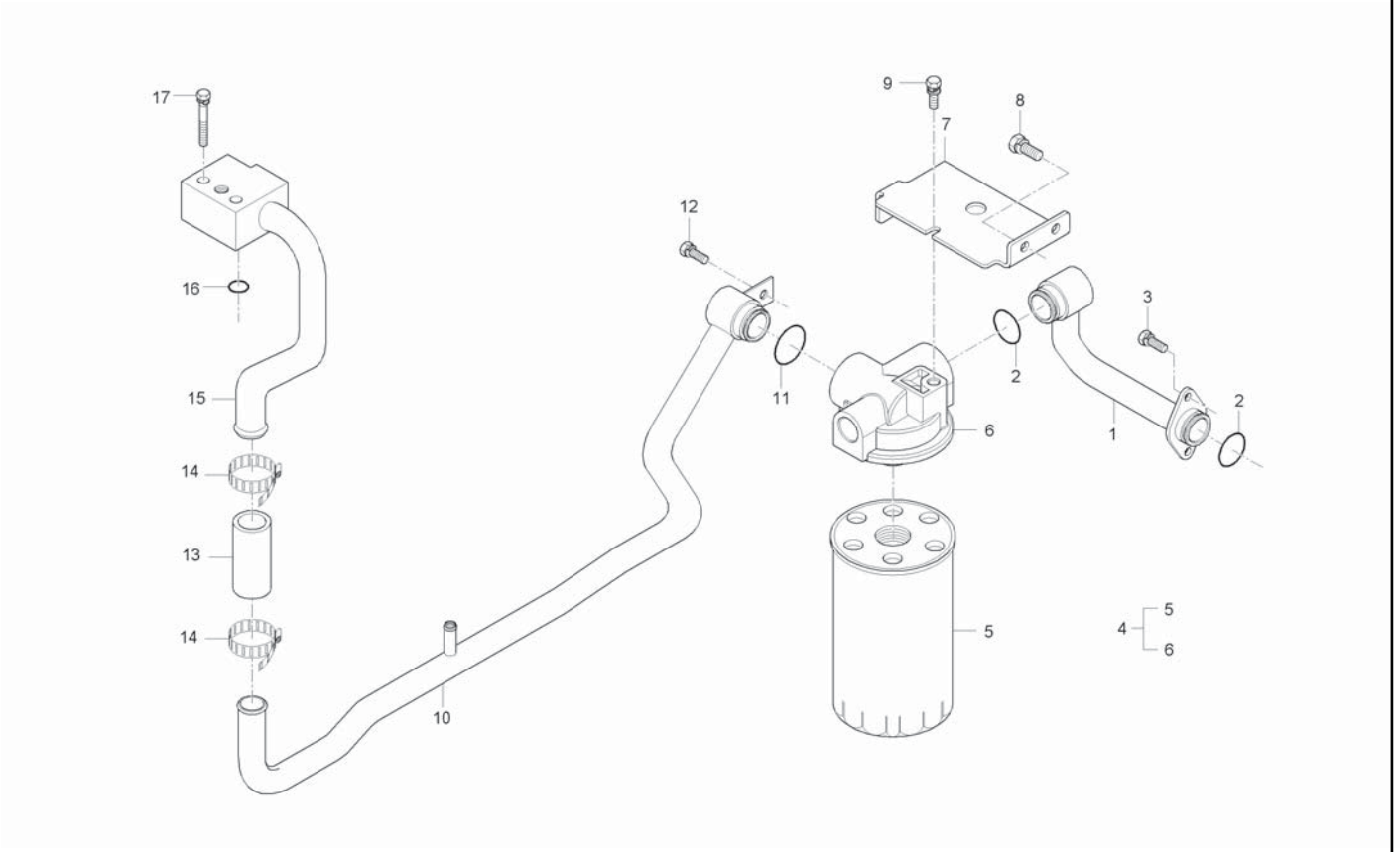

A : CK35-EU , B : CK35H-EU

No.	Part Number	Desciption	Q'TY A	Q'TY B	Q'TY C	Q'TY D	Q'TY E	I.C	Remark
15	T2185-38071	TUBE 3, INPUT	1						
15	T2185-38072	TUBE 3, INPUT	1 ~HT8100038					<----	
15	T2185-38072BB	TUBE 3, INPUT	1 HT8100039~					<-0->	
16	04810-00220	O RING	1						
17	01123-50850	BOLT, WASHER	2						

----> Old replace New
<-X-> Not interchangeable
<-O-> Interchangeable with another part(s)
<---- New replace Old
<---> Interchangeable

CK30H-T725B

HYDRAULIC(1)GROUP

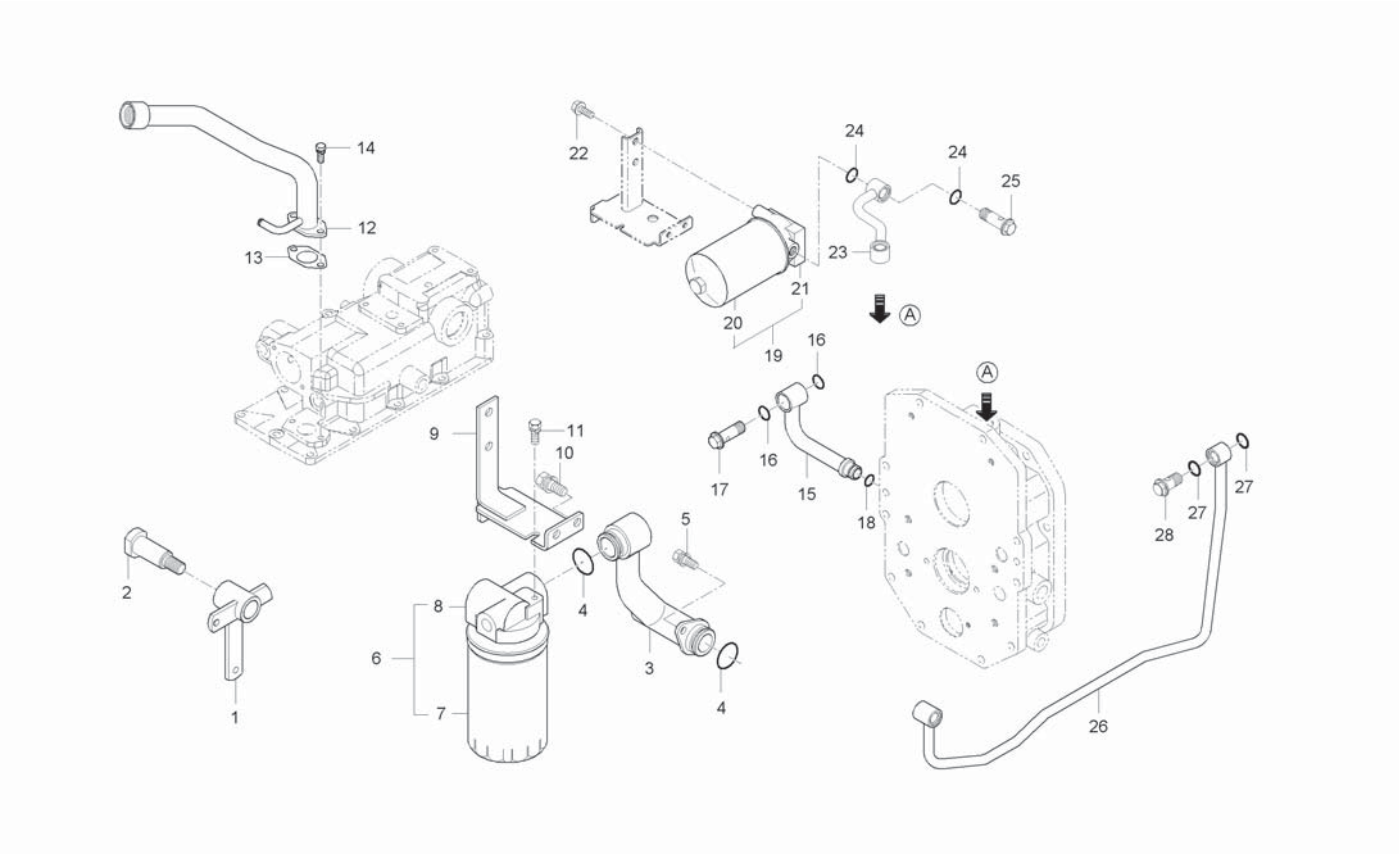

A : CK35-EU , B : CK35H-EU

No.	Part Number	Desciption	Q'TY A	Q'TY B	Q'TY C	Q'TY D	Q'TY E	I.C	Remark
1	T2198-33141BB	ARM		1					
2	T2195-33171	BOLT, CLAMPING		1					
3	T2185-38003BB	TUBE 1, INPUT		1					
4	04810-00320	O RING		2					
5	01123-50820	BOLT, WASHER		2					M8*P1.25
6	T2195-38111	FILTER ASS'Y-HYD.		1					
7	T2185-38031	FILTER, HYDRAULIC		1					
8	T2195-38041	BRACKET, FILTER HST		1					
9	T2195-38062ED	BRACKET, FILTER		1					
10	01133-51020	BOLT, WASHER		2					M10*P1.25
11	01125-50820	BOLT, WASHER		1					M8*P1.25
12	T2185-35004BB	TUBE, OILING		1					
13	T4620-35012	PACKING		1					
14	01133-51018	BOLT, WASHER		2					
15	T2195-37044BB	TUBE, HST CHARGE INPUT		1					
16	04810-00220	O RING		2					
17	T2195-37081	BOLT, JOINT		1					
18	04810-00160	O RING		1					P16
19	T2195-38122	HYDRAULIC HOSE ASSY		1					

----> Old replace New
<-X-> Not interchangeable
<-O-> Interchangeable with another part(s)
<---- New replace Old
<---> Interchangeable

CK30H-T725B

HYDRAULIC(1)GROUP

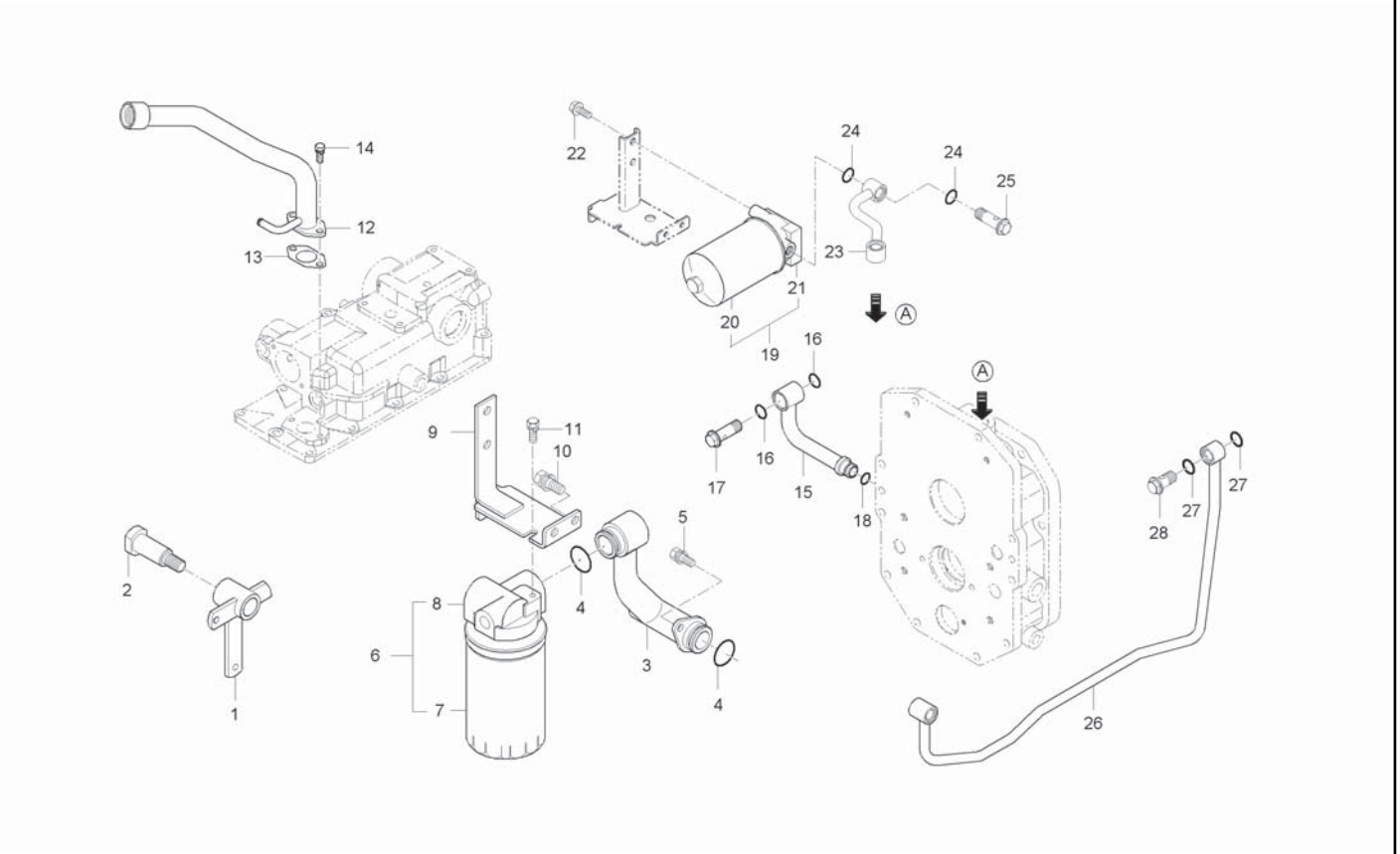

A : CK35-EU , B : CK35H-EU

No.	Part Number	Desciption	Q'TY A	Q'TY B	Q'TY C	Q'TY D	Q'TY E	I.C	Remark
20	T2195-38031	FILTER, HST HYDRAULIC		1					
21	T2195-38052	BRACKET 2, FILTER HST		1					
22	01133-51020	BOLT, WASHER		2					M10*P1.25
23	T2195-37034BB	TUBE, HST INPUT		1					
24	04810-00200	O RING		4					
25	T4620-37092	BOLT, JOINT		2					
26	T2185-90263	TUBE J2, HYDRAULIC		1					
26	T2185-90264	TUBE J2, HYDRAULIC		1				<--->	
27	04810-00200	O RING		2					
28	T4620-37092	BOLT, JOINT		1					

----> Old replace New
<-X-> Not interchangeable
<-O-> Interchangeable with another part(s)
<---- New replace Old
<---> Interchangeable

CK30MEU-T725B

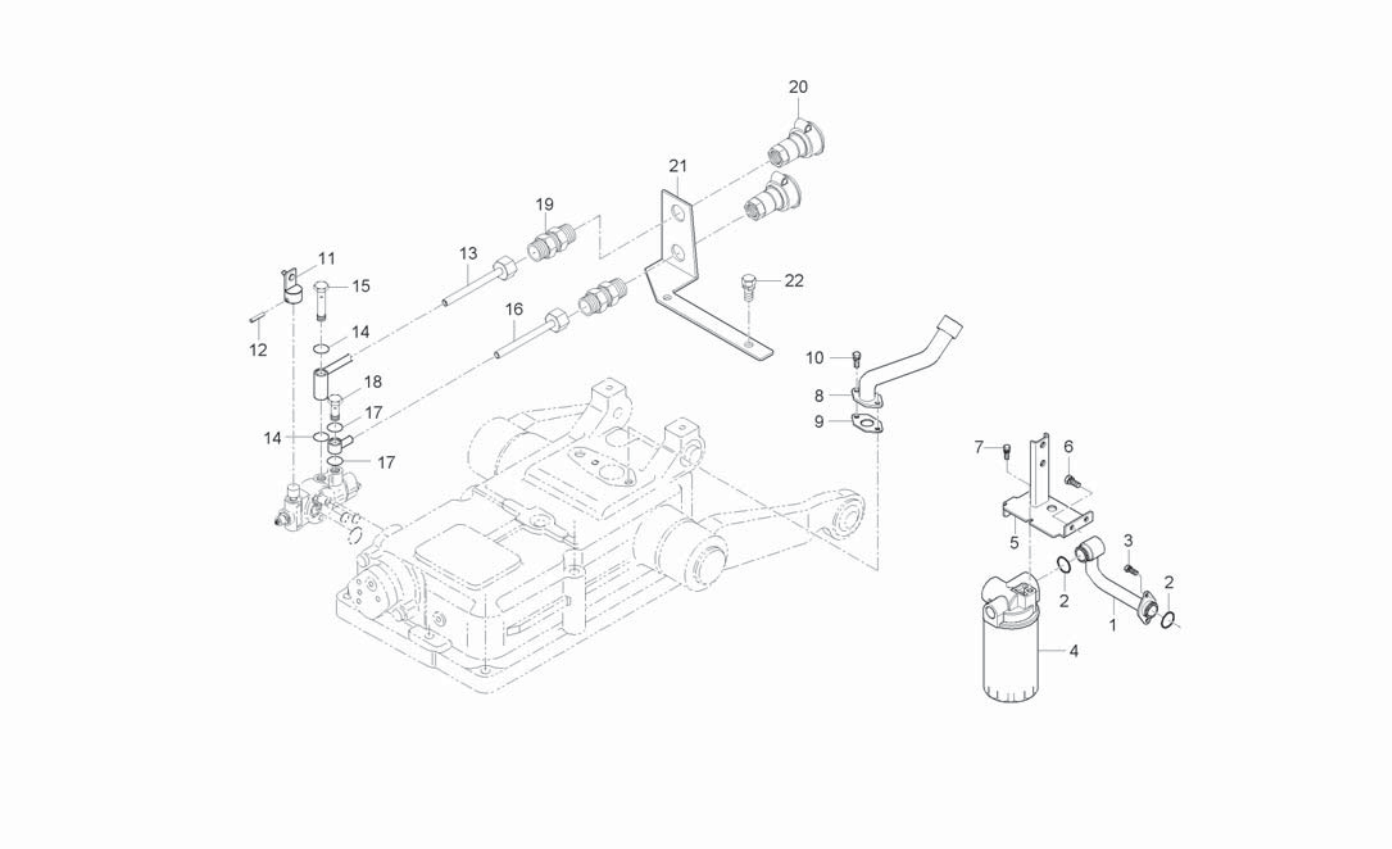

A : CK35-EU , B : CK35H-EU

No.	Part Number	Desciption	Q'TY A	Q'TY B	Q'TY C	Q'TY D	Q'TY E	I.C	Remark
1	T2185-38003	TUBE 1, INPUT	1						
2	04811-00320	O RING	2						
3	01123-50820	BOLT, WASHER	2						
4	T2185-38121	HYDRAULIC HOSE ASSY	1						
5	T2185-38062	SUPPORT, FILTER	1						
6	01133-51020	BOLT, WASHER	2						
7	01125-50820	BOLT, WASHER	1						
8	T2185-35004	TUBE, OILING	1						
9	T4620-35012	PACKING	1						
10	01133-51018	BOLT, WASHER	2						
11	T2155-68491	LEVER1(DOUBLE)	1						
12	T2610-39572	SCREW, HOLDER	1						
13	T2155-90011	TUBE A, HYD	1						
14	04810-00200	O RING	2						
15	T4520-37372	BOLT 2, JOINT	1						
16	T2155-90021	TUBE B, HYD	1						
17	04810-00200	O RING	2						
18	T4520-90042	BOLT,JOINT	1						
19	04612-00220	SNAP RING	2						

----> Old replace New
<-X-> Not interchangeable
<-O-> Interchangeable with another part(s)
<---- New replace Old
<---> Interchangeable

CK30MEU-T725B

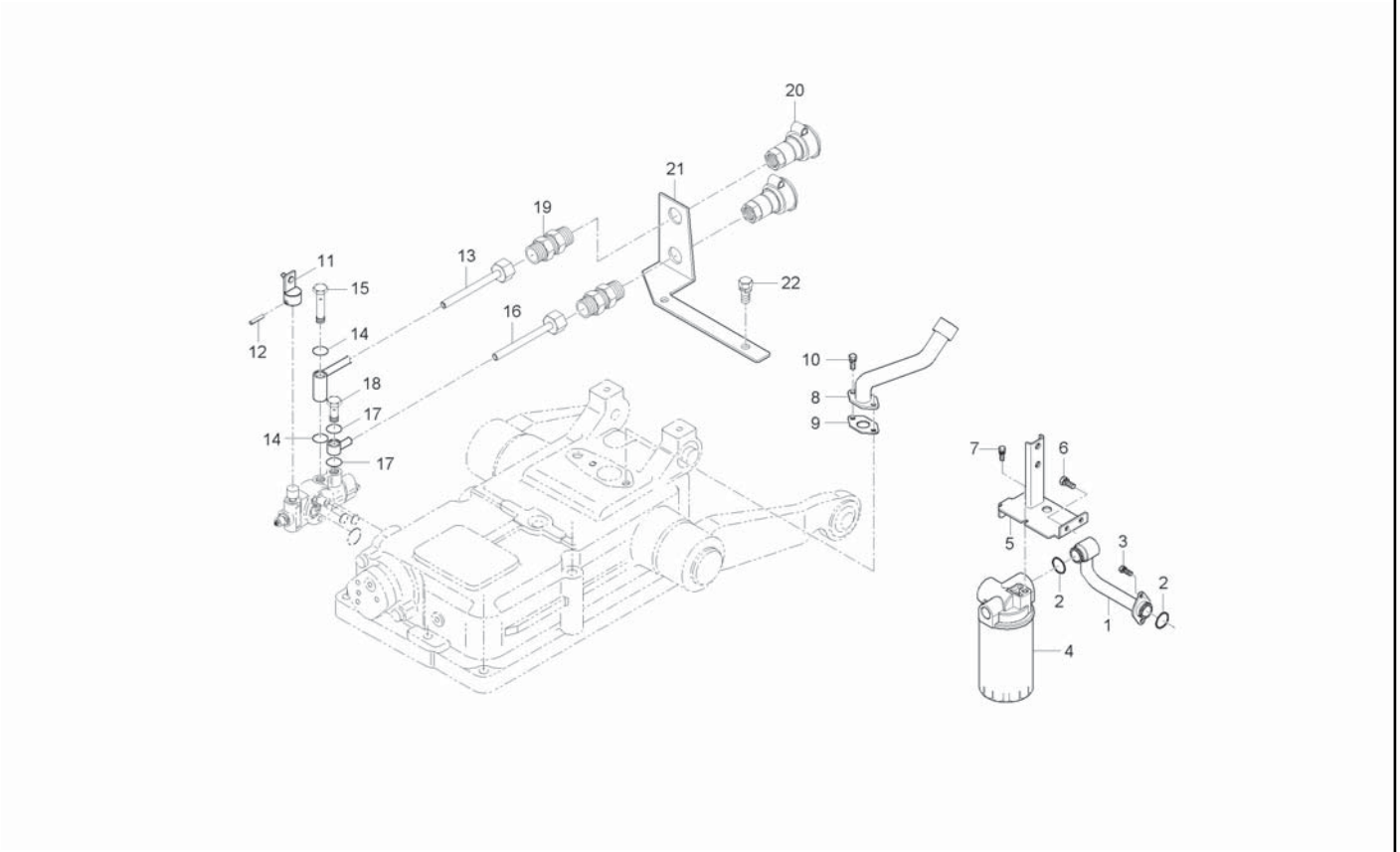

A : CK35-EU , B : CK35H-EU

No.	Part Number	Desciption	Q'TY A	B	C	D	E	I.C	Remark
20	T4520-90093	COUPLER SOCKET ASSY	2						
21	T2181-90072	SUPPORT, SOCKET	1						
22	01133-51018	BOLT, WASHER	2						

----> Old replace New
<-X-> Not interchangeable
<-O-> Interchangeable with another part(s)

<---- New replace Old
<---> Interchangeable

CK30H-T735A HST EXTERNAL HYDRAULIC LINE GROUP

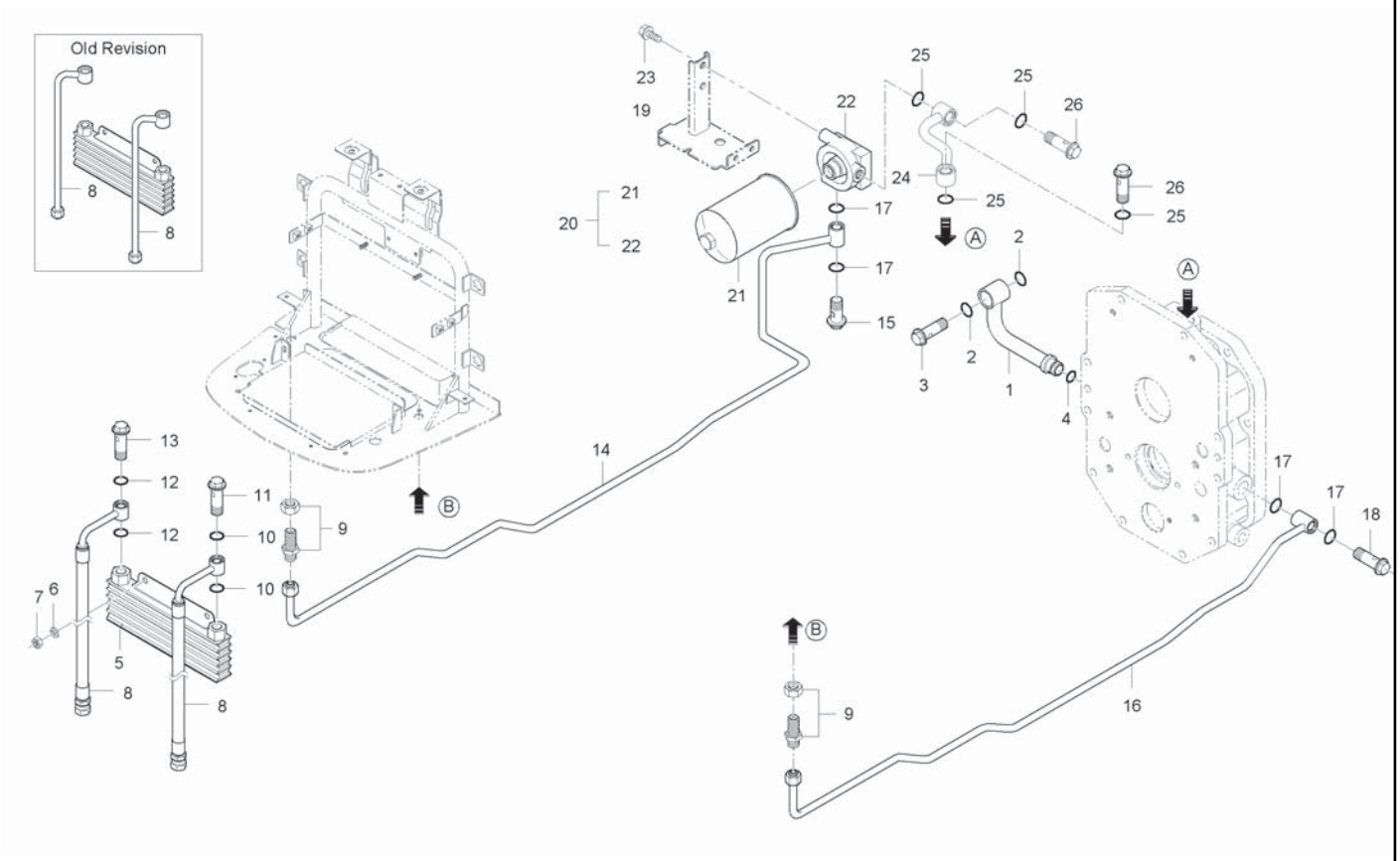

A : CK35-EU , B : CK35H-EU

No.	Part Number	Desciption	Q'TY A	Q'TY B	Q'TY C	Q'TY D	Q'TY E	I.C	Remark
1	T2195-37043	TUBE, HST CHARGE INPUT		1					
1	T2195-37044	TUBE, HST CHARGE INPUT		1 ~HT8900076				<--->	
2	04810-00200	O RING		2					
2	04810-00220	O RING		2				<----	
3	T2195-37081	BOLT, JOINT		1					
4	04810-00160	O RING		1					P16
5	T2195-37011	OIL COOLER ASSY		1					
5	T2185-37011	OIL COOLER ASSY		1 ~JT8900026				<--->	
5	T2185-37021	ASSY,OIL COOLER		1 JT8900027~				<-0->	
6	04512-50080	SPRING WASHER		2					M08
7	02156-50080	NUT		2					M8XP1.25
8	T2195-37113	TUBE 1, COOLING		2					
8	T2195-37161	HOSE 1, COOLING		2 ~HT8900026				<----	
8	T2195-37162	COOLING HOSE		2 JT8900027~				<-0->	
9	T2185-37161	CONNECTOR		2					
10	04810-00180	O RING		2					
11	T2195-37151	JOINT BOLT, OIL COOLER		1					
12	04810-00180	O RING		2					
13	T2195-37151	JOINT BOLT, OIL COOLER		1					

----> Old replace New
<-X-> Not interchangeable
<-0-> Interchangeable with another part(s)
<---- New replace Old
<---> Interchangeable

CK30H-T735A HST EXTERNAL HYDRAULIC LINE GROUP

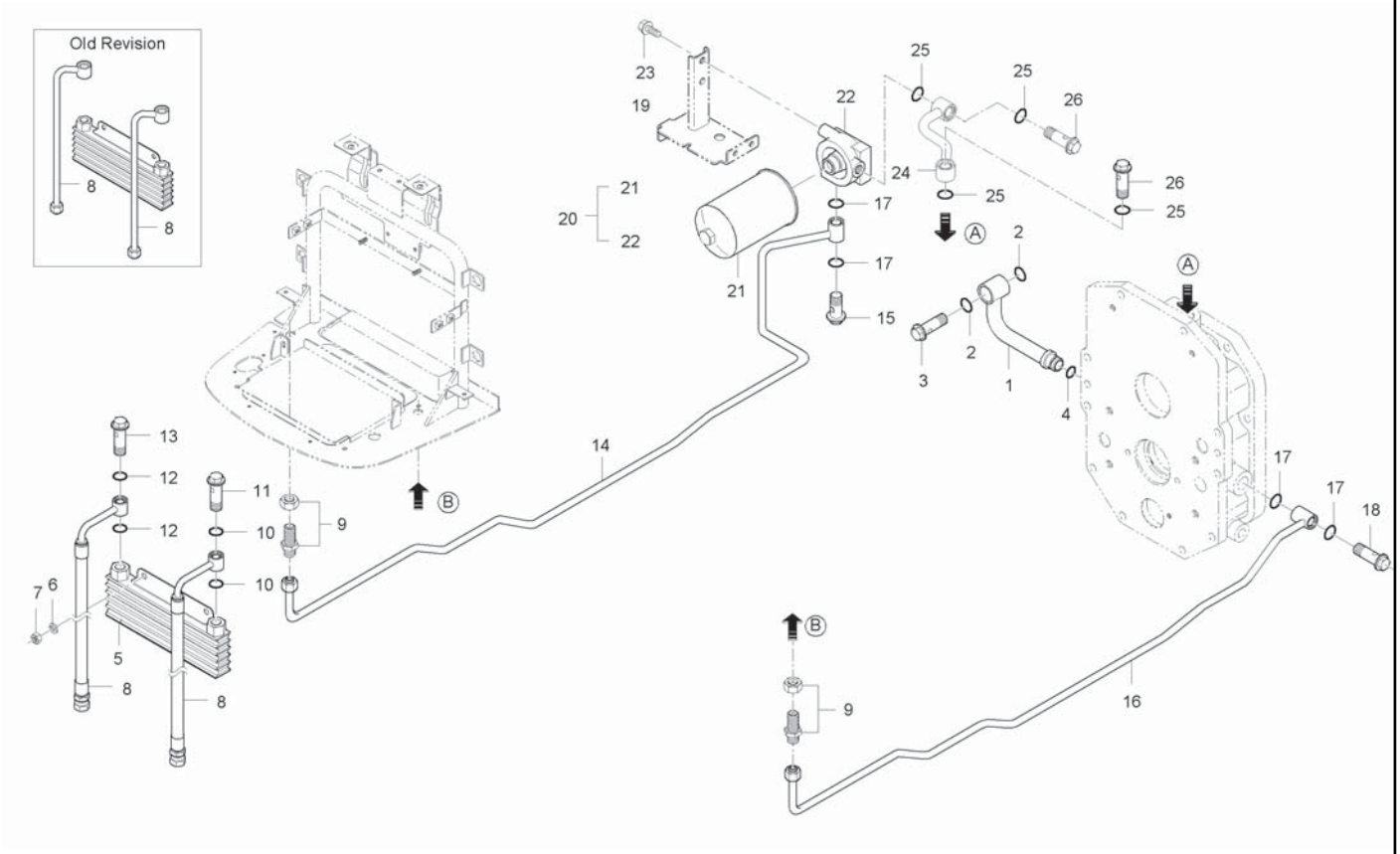

A : CK35-EU , B : CK35H-EU

No.	Part Number	Desciption	Q'TY A	Q'TY B	Q'TY C	Q'TY D	Q'TY E	I.C	Remark
14	T2195-37132	TUBE 3, COOLING		1					
14	T2195-37133	TUBE 3, COOLING		1				<--->	
14	T2195-37134	TUBE 3, COOLING		1				<----	
14	T2195-37135BB	TUBE 3, COOLING		1				<-X->	
14	T2195-37136	TUBE 3, COOLING		1				<--->	
15	T2360-37081	BOLT, JOINT		1					
16	T2195-37141	TUBE 4, COOLING		1					
16	T2195-37142	TUBE 4, COOLING		1				<--->	
16	T2195-37143	TUBE 4, COOLING		1				<----	
16	T2195-37144BB	TUBE 4, COOLING		1				<-X->	
16	T2195-37145	TUBE 4, COOLING		1				<-O->	
17	04810-00200	O RING		2					
18	T2360-37081	BOLT, JOINT		1					
19	01125-50816	BOLT, WASHER		1					M8*P1.25
20	T2195-38122	HYDRAULIC HOSE ASSY		1					
21	T2195-38031	FILTER, HST HYDRAULIC		1					
22	T2195-38051	BRACKET 2, FILTER HST		1					
22	T2195-38052	BRACKET 2, FILTER HST		1				<----	
23	01133-51020	BOLT, WASHER		2					M10*P1.25

----> Old replace New
<-X-> Not interchangeable
<-O-> Interchangeable with another part(s)
<---- New replace Old
<---> Interchangeable

CK30H-T735A HST EXTERNAL HYDRAULIC LINE GROUP

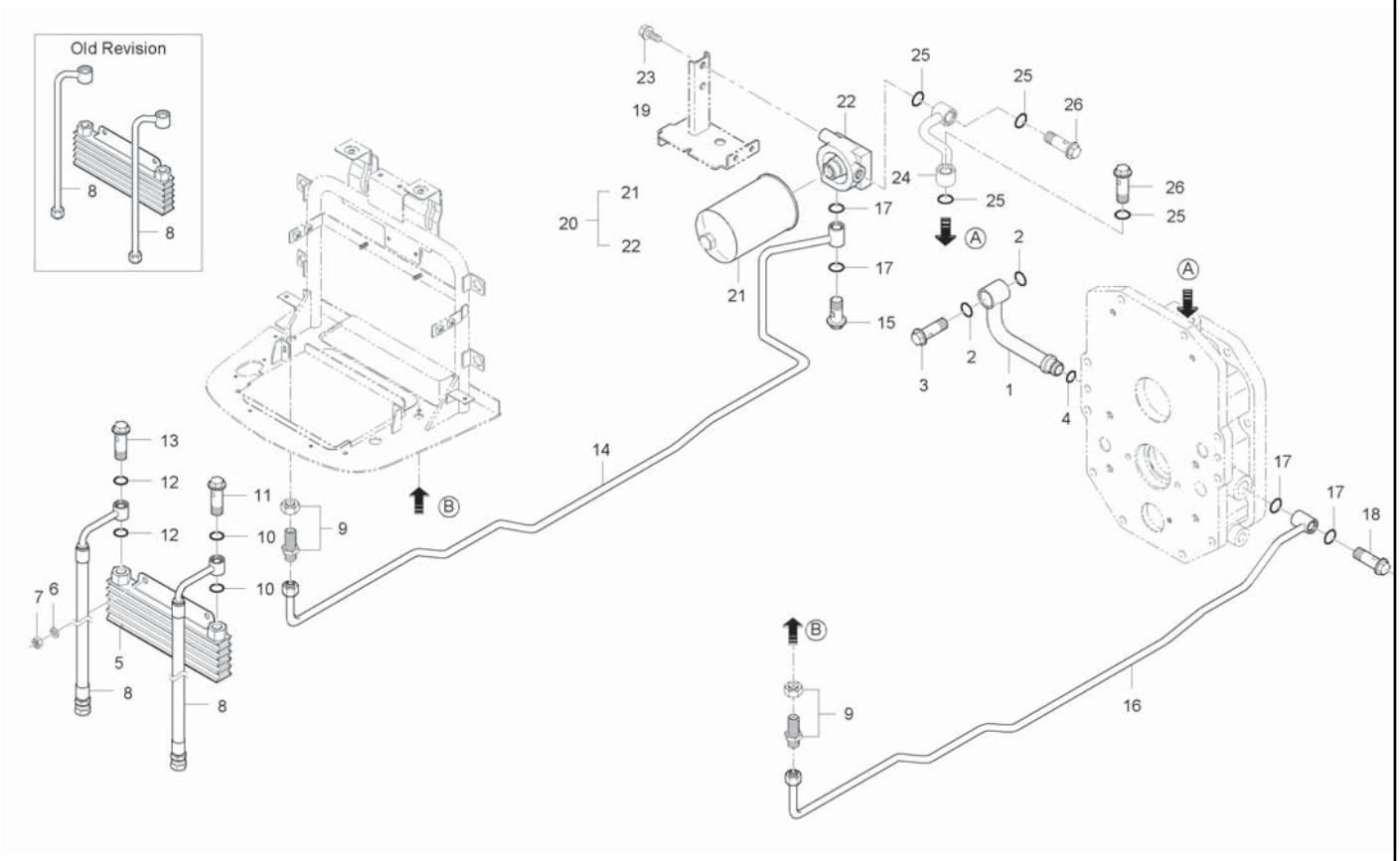

A : CK35-EU , B : CK35H-EU

No.	Part Number	Desciption	Q'TY A	Q'TY B	Q'TY C	Q'TY D	Q'TY E	I.C	Remark
24	T2195-37031	TUBE, HST INPUT		1					
24	T2195-37032	TUBE, HST INPUT		1				<----	
24	T2195-37033	TUBE, HST INPUT		1				<----	
24	T2195-37034	TUBE, HST INPUT		1 ~HT8900076				<--->	
25	04810-00200	O RING		4					
26	T4620-37092	BOLT, JOINT		2					

----> Old replace New
<-X-> Not interchangeable
<-O-> Interchangeable with another part(s)
<---- New replace Old
<---> Interchangeable

CK30H-T750A

JOYSTICK VALVE GROUP

(CK35H-EU : ~ HT8900076)

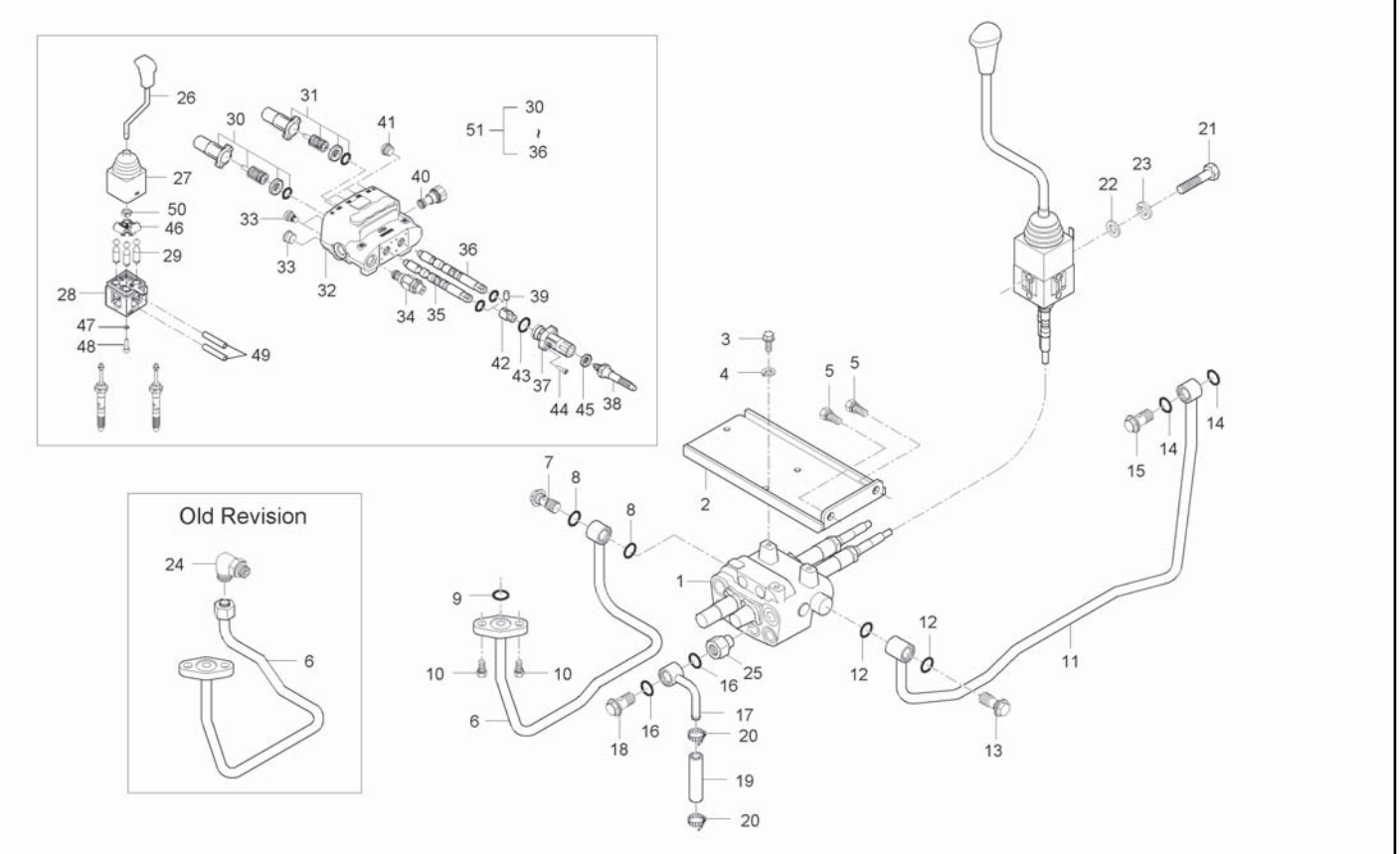

A : CK35-EU , B : CK35H-EU

No.	Part Number	Desciption	Q'TY A	Q'TY B	Q'TY C	Q'TY D	Q'TY E	I.C	Remark
1	T2185-90112	JOYSTICK VALVE ASSY		1					
1	T2195-90111	JOYSTICK VALVE ASSY		1				<--->	
2	T2195-90211	STAY, JOYSTICK VALVE H		1 ~HT8900076					
2	T2195-90211BB	STAY, JOYSTICK VALVE H		1 JT8900001~				<-X->	
3	T2350-90311	BOLT, VALVE CLAMPING		3					
3	T2350-90331	BOLT, VALVE LOOK		3				<--->	
4	04512-50080	SPRING WASHER		3					M08
5	01133-51220	BOLT, WASHER		2					M12*P1.25
6	T2198-90251	TUBE J1, HYDRAULIC		1 ~HT8900076					
6	T2198-90251BB	TUBE J1, HYDRAULIC		1 JT8900001~				<-X->	
7	T4620-37092	BOLT, JOINT		1					
8	04810-00200	O RING		2					
9	04810-00180	O RING		1					
10	01123-50820	BOLT, WASHER		2					M8*P1.25
11	T2185-90264	TUBE J2, HYDRAULIC		1 ~HT8900076					
11	T2185-90264BB	TUBE J2, HYDRAULIC		1 JT8900001~				<-X->	
12	04810-00200	O RING		2					
13	T4620-37092	BOLT, JOINT		1					
14	04810-00200	O RING		2					

----> Old replace New
<-X-> Not interchangeable
<-O-> Interchangeable with another part(s)
<---- New replace Old
<---> Interchangeable

CK30H-T750A

JOYSTICK VALVE GROUP

(CK35H-EU : ~ HT8900076)

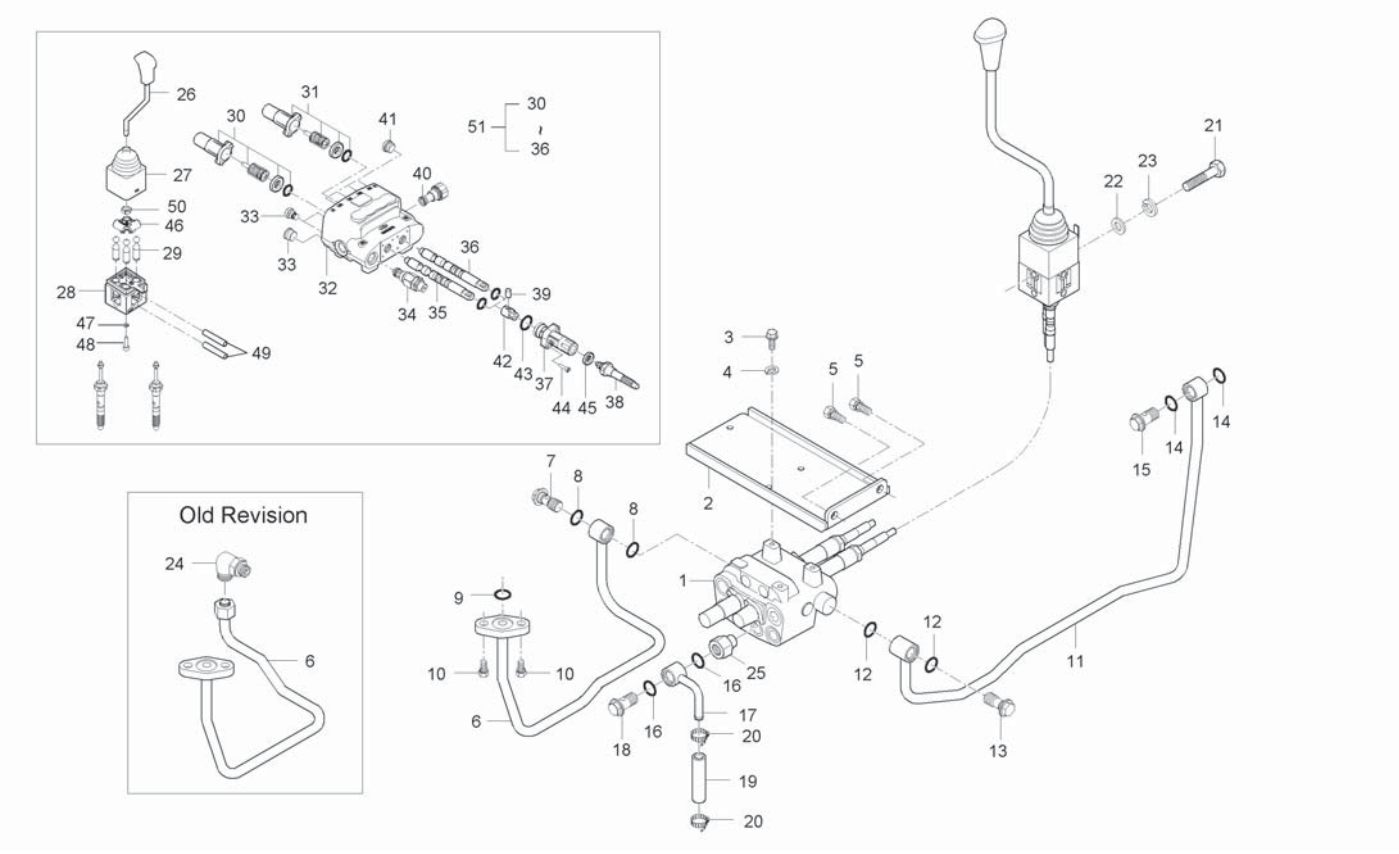

A : CK35-EU , B : CK35H-EU

No.	Part Number	Desciption	Q'TY A	Q'TY B	Q'TY C	Q'TY D	Q'TY E	I.C	Remark
15	T4620-37092	BOLT, JOINT		1					
16	04810-00200	O RING		2					
17	T2185-90222	TUBE J, AUTO RETURN		1 ~HT8900076					
17	T2185-90222BB	TUBE J, AUTO RETURN		1 JT8900001~				<-X->	
18	T4520-90042	BOLT,JOINT		1					
19	T2185-38402	HOSE 1, RETURN		1					
19	T2185-38403	HOSE 1, RETURN		1				<--->	
19	T2185-38404	HOSE 1, RETURN		1				<--->	
20	52200-2523-1	BAND, HOSE		2					
20	E5700-73361	BAND, HOSE		2 ~GT8900068				<--->	
20	09318-89022	CLMAP, HOSE		2 GT8900069~				<-0->	
21	01153-50880	BOLT		2					HEX12*91
22	04013-50080	WASHER		2					M8
23	04512-50080	SPRING WASHER		2					M08
24	T4682-37221	ELBOW		1					
25	T2350-90171	CONNETOR, JOYSTIC VALVE		1					
26	XAST281404	LEVER		1					
26	26001-0010	HANDLE ASSY, C		1				<--->	
27	3SOF204111	JABARA		1					

----> Old replace New
<-X-> Not interchangeable
<-0-> Interchangeable with another part(s)
<---- New replace Old
<---> Interchangeable

CK30H-T750A

JOYSTICK VALVE GROUP

(CK35H-EU : ~ HT8900076)

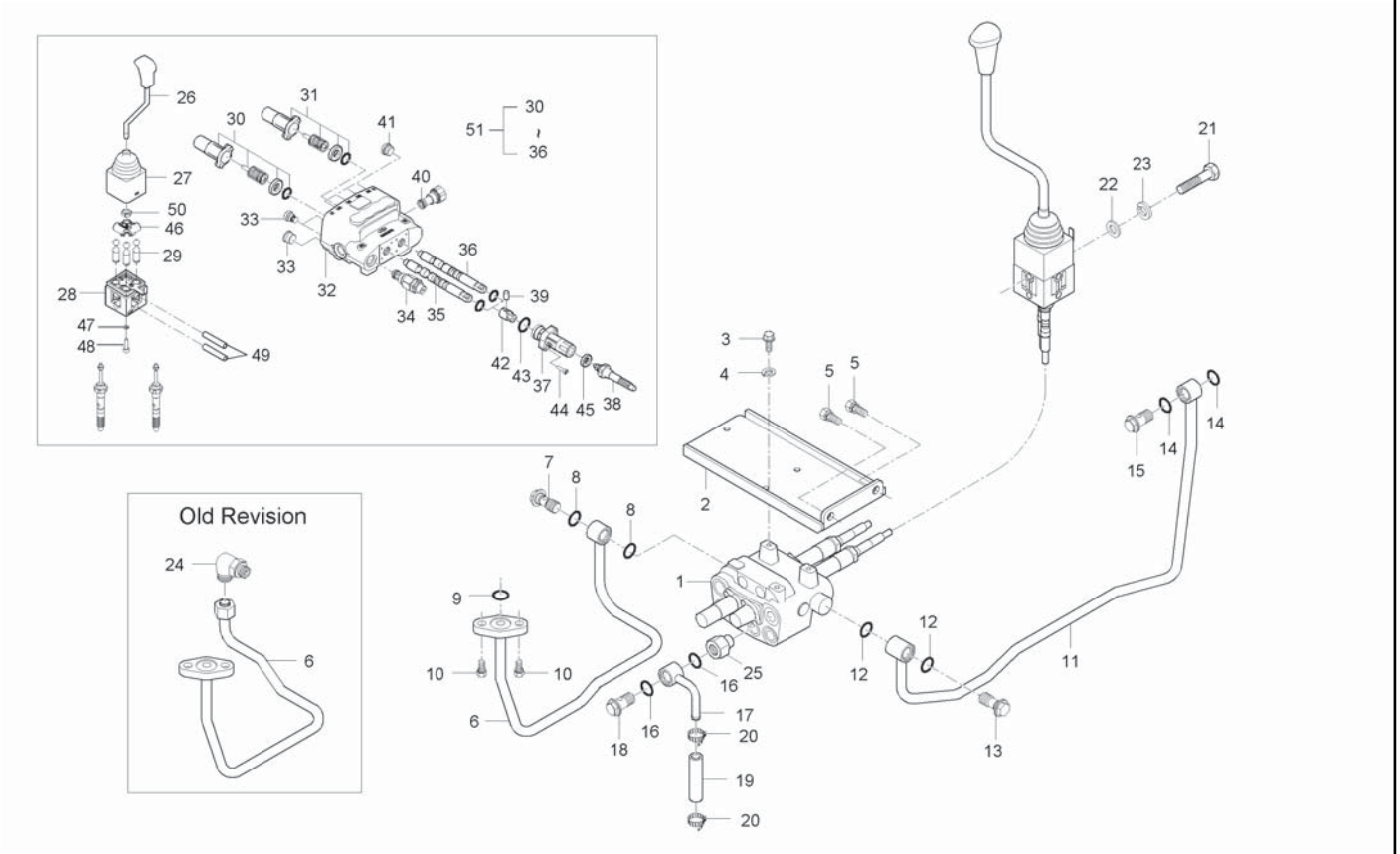

A : CK35-EU , B : CK35H-EU

No.	Part Number	Desciption	Q'TY A	Q'TY B	Q'TY C	Q'TY D	Q'TY E	I.C	Remark
27	36001-0180	COVER A, HANDLE		1				<--->	
28	5COR211761	BODY		1					
28	26001-0040	BODY ASSY, A		1				<--->	
29	5CIN305	SELECTOR ASSY		1					
29	36001-0160	PIN A, BOOL		3				<--->	
30	5V13306020	POSITIONER, SPOOL		1					
31	5V13505400	POSITIONER, SPOOL		1					
32	5KC1858010	BODY ASSY		1					
33	3XTAP822150	PLUG		2					
34	X162121175	VALVE, RELIEF		1					
35	3CU5242100	SPOOL		1					
36	3CU5262120	SPOOL		1					
37	5TEL107110	TP50 KIT		2					
37	36001-0120	CAP 1, END		2				<--->	
38	4CAV600650	CABLE		2					
38	36001-0210	CABLE, 650		2				<--->	
39	3SP1109181	PIN		2					
39	36001-0010	PIN, CONNECTING		2				<--->	
40	XGIU530580	PLUG		1					

----> Old replace New
<-X-> Not interchangeable
<-O-> Interchangeable with another part(s)
<---- New replace Old
<---> Interchangeable

CK30H-T750A

JOYSTICK VALVE GROUP

(CK35H-EU : ~ HT8900076)

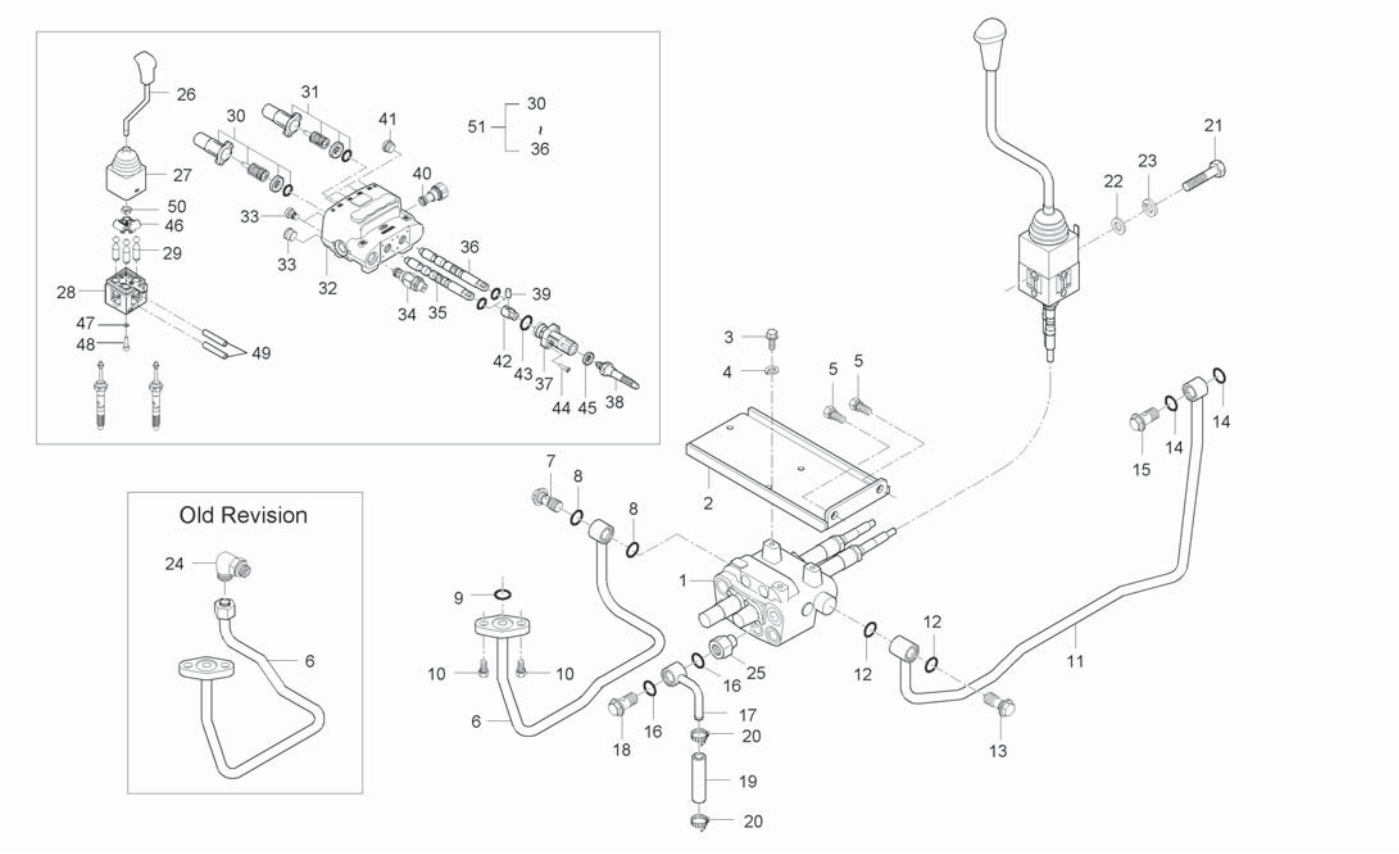

A : CK35-EU , B : CK35H-EU

No.	Part Number	Desciption	Q'TY A	Q'TY B	Q'TY C	Q'TY D	Q'TY E	I.C	Remark
41	3XTAP817130	PLUG		4					
42	36001-0150	JOINT		2					
43	36001-0030	O RING		2					
44	36001-0080	BOLT, HEXAGEN		1					
45	36001-0130	FLANGE		2					
46	36001-0140	SELECTOR		1					
47	36001-0100	WASHER, SPRING M6		1					
48	36001-0060	BOLT, HEXAGEN		4					
49	36001-0050	RING, SPACER		2					
50	02072-50140	NUT		1					
51	102020058	BODY VALVE ASSY		1					

----> Old replace New
<-X-> Not interchangeable
<-O-> Interchangeable with another part(s)
<---- New replace Old
<---> Interchangeable

CK30M-T750A

JOYSTICK VALVE GROUP

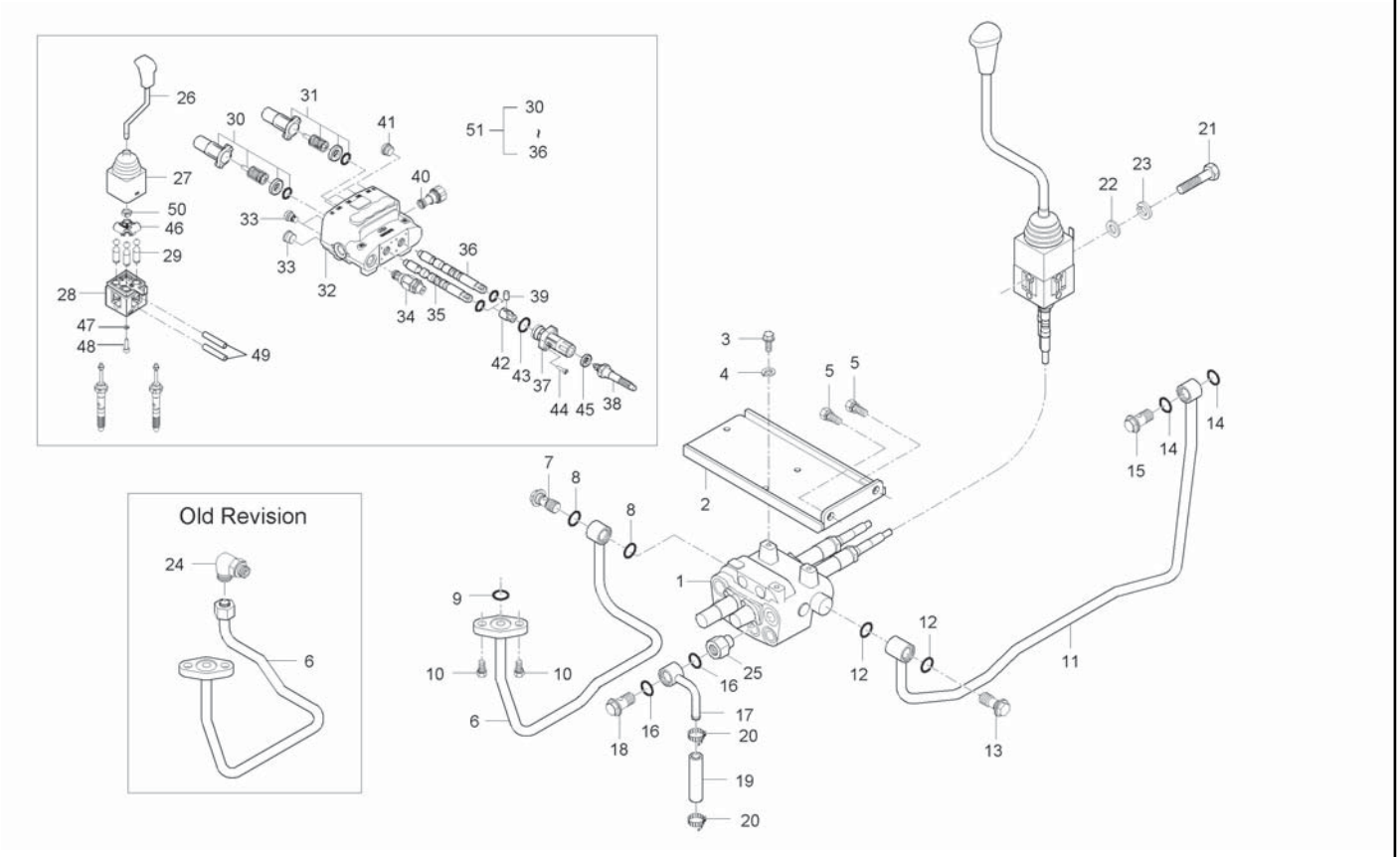

A : CK35-EU , B : CK35H-EU

No.	Part Number	Desciption	Q'TY A	Q'TY B	Q'TY C	Q'TY D	Q'TY E	I.C	Remark
1	T2185-90111	JOYSTICK VALVE ASSY	1						
1	T2185-90112	JOYSTICK VALVE ASSY	1					<----	
1	T2195-90111	JOYSTICK VALVE ASSY	1					<--->	
2	T2185-90211	STAY, JOYSTICK VALVE M	1 ~HT8100038						
2	T2185-90211BB	support.joystick,valve	1 HT8100039~					<-X->	
3	T2350-90311	BOLT, VALVE CLAMPING	3						
3	T2350-90331	BOLT, VALVE LOOK	3					<--->	
4	04512-50080	SPRING WASHER	3						
5	01133-51220	BOLT, WASHER	2						
6	T2185-90253	TUBE J1, HYDRAULIC	1 ~FT8100016						
6	T2198-90251	TUBE J1, HYDRAULIC	1 ~HT8100038					<-X->	
6	T2198-90251BB	TUBE J1, HYDRAULIC	1 HT8100039~					<-X->	
7	T4620-37092	BOLT, JOINT	1						
8	04810-00200	O RING	2						
9	04810-00180	O RING	1						
10	01123-50820	BOLT, WASHER	2						
11	T2185-90264	TUBE J2, HYDRAULIC	1 ~HT8100038						
11	T2185-90264BB	TUBE J2, HYDRAULIC	1 HT8100039~					<-X->	
12	04810-00200	O RING	2						

----> Old replace New
<-X-> Not interchangeable
<-O-> Interchangeable with another part(s)
<---- New replace Old
<---> Interchangeable

CK30M-T750A

JOYSTICK VALVE GROUP

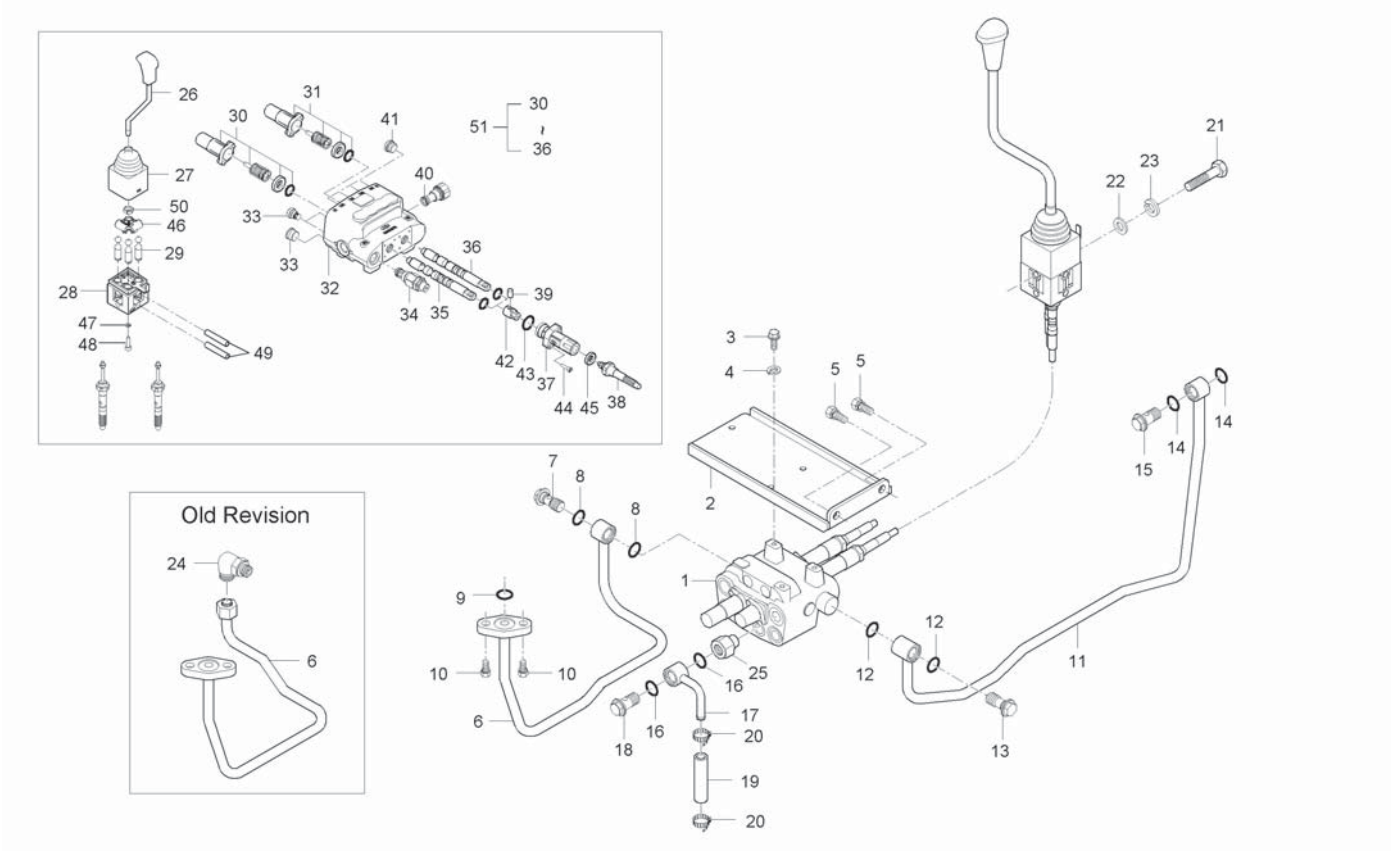

A : CK35-EU , B : CK35H-EU

No.	Part Number	Desciption	Q'TY A	B	C	D	E	I.C	Remark
13	T4620-37092	BOLT, JOINT	1						
14	04810-00200	O RING	2						
15	T4620-37092	BOLT, JOINT	1						
16	04810-00200	O RING	2						
17	T2185-90222	TUBE J, AUTO RETURN	1 ~HT8100038					<----	
17	T2185-90222BB	TUBE J, AUTO RETURN	1 HT8100039~					<-X->	
18	T4520-90042	BOLT,JOINT	1						
19	T2185-38402	HOSE 1, RETURN	1						
19	T2185-38403	HOSE 1, RETURN	1					<--->	
19	T2185-38404	HOSE 1, RETURN	1					<--->	
20	52200-2523-1	BAND, HOSE	2						
20	E5700-73361	BAND, HOSE	2 ~GT8100084					<--->	
20	09318-89022	CLMAP, HOSE	2 GT8100085~					<-0->	
21	01153-50880	BOLT	2						
22	04013-50080	WASHER	2						
23	04512-50080	SPRING WASHER	2						
24	T4682-37221	ELBOW	1						
25	T2350-90171	CONNETOR, JOYSTIC VALVE	1						
26	XAST	GRIP	1						

----> Old replace New
<-X-> Not interchangeable
<-0-> Interchangeable with another part(s)
<---- New replace Old
<---> Interchangeable

CK30M-T750A

JOYSTICK VALVE GROUP

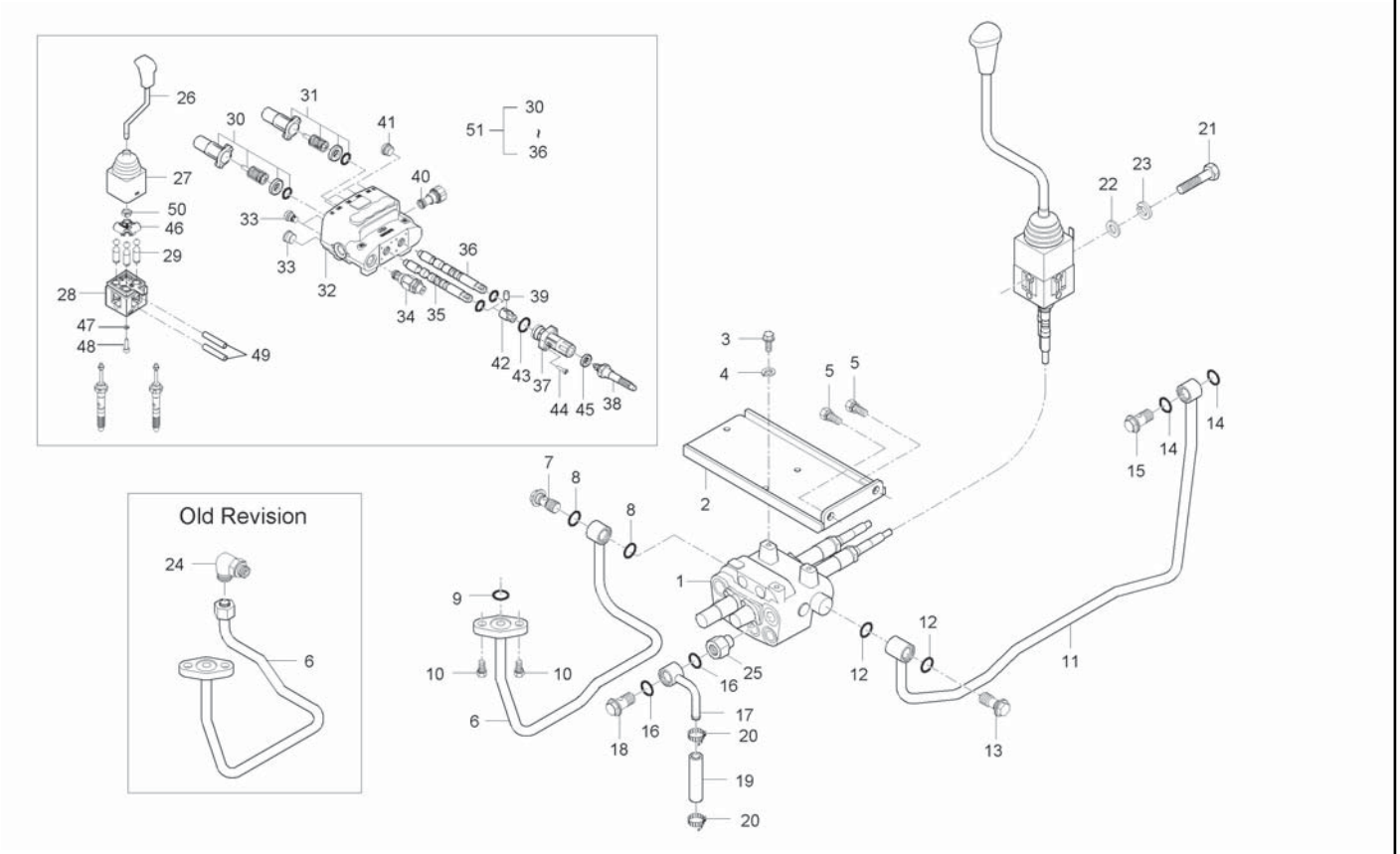

A : CK35-EU , B : CK35H-EU

No.	Part Number	Desciption	Q'TY A	B	C	D	E	I.C	Remark
26	XAST281404	LEVER	1					<----	
26	26001-0010	HANDLE ASSY, C	1					<--->	
27	3SOF204100	RUBBER	1						
27	3SOF204111	JABARA	1					<----	
27	36001-0180	COVER A, HANDLE	1					<--->	
28	5COR211661	BODY ASSY	1						
28	5COR211761	BODY	1					<----	
28	26001-0040	BODY ASSY, A	1					<--->	
29	5CIN305	SELECTOR ASSY	1						
29	36001-0160	PIN A, BOOL	3					<--->	
30	5V13306020	POSITIONER, SPOOL	1						
31	5V13505400	POSITIONER, SPOOL	1						
32	5KC1858002	BODY ASSY	1						
32	5KC1858010	BODY ASSY	1					<----	
33	3XTAP822150	PLUG	1						
33	3XTAP822150	PLUG	2					<----	
34	X162121175	VALVE, RELIEF	1						
35	3CU5242100	SPOOL	1						
36	3CU5262120	SPOOL	1						

----> Old replace New
<-X-> Not interchangeable
<-O-> Interchangeable with another part(s)
<---- New replace Old
<---> Interchangeable

CK30M-T750A

JOYSTICK VALVE GROUP

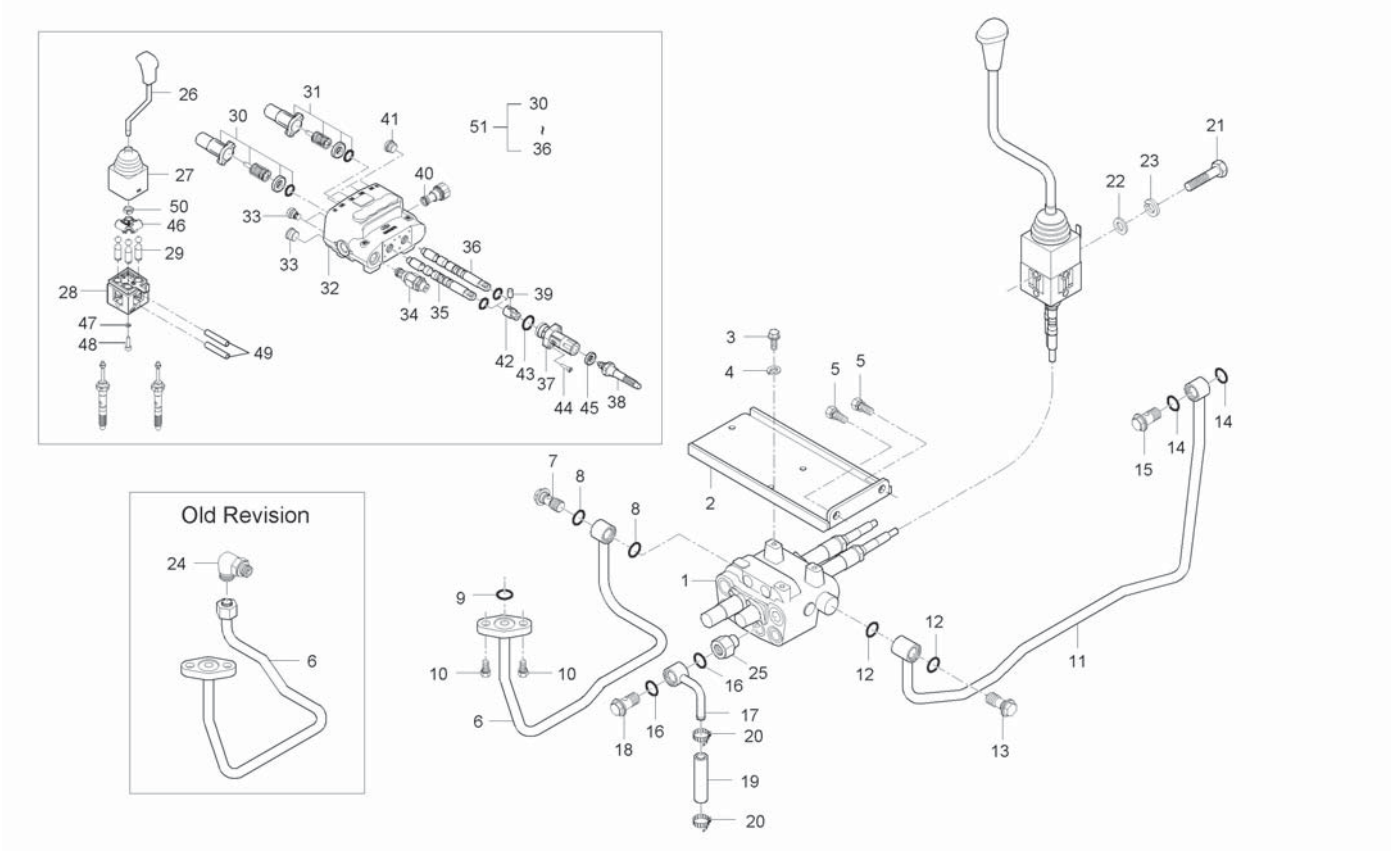

A : CK35-EU , B : CK35H-EU

No.	Part Number	Desciption	Q'TY A	B	C	D	E	I.C	Remark
37	5TEL107110	TP50 KIT	2						
37	36001-0120	CAP 1, END	2					<--->	
38	4CAV600650	CABLE	2						
38	36001-0210	CABLE, 650	2					<--->	
39	3SP1109181	PIN	2						
39	36001-0010	PIN, CONNECTING	2					<--->	
40	XGIU530580	PLUG	1						
41	3XTAP817130	PLUG	1						
41	3XTAP817130	PLUG	4					<----	
42	36001-0150	JOINT	2						
43	36001-0030	O RING	2						
44	36001-0060	BOLT, HEXAGEN	4						
45	36001-0130	FLANGE	2						
46	36001-0140	SELECTOR	1						
47	36001-0100	WASHER, SPRING M6	1						
48	36001-0080	BOLT, HEXAGEN	1						
49	36001-0050	RING, SPACER	2						
50	02072-50140	NUT	1						
51	102020058	BODY VALVE ASSY	1						

----> Old replace New
<-X-> Not interchangeable
<-O-> Interchangeable with another part(s)
<---- New replace Old
<---> Interchangeable

CK35H-T750A

JOYSTICK VALVE GROUP

(CK35H-EU : JT8900001 ~)

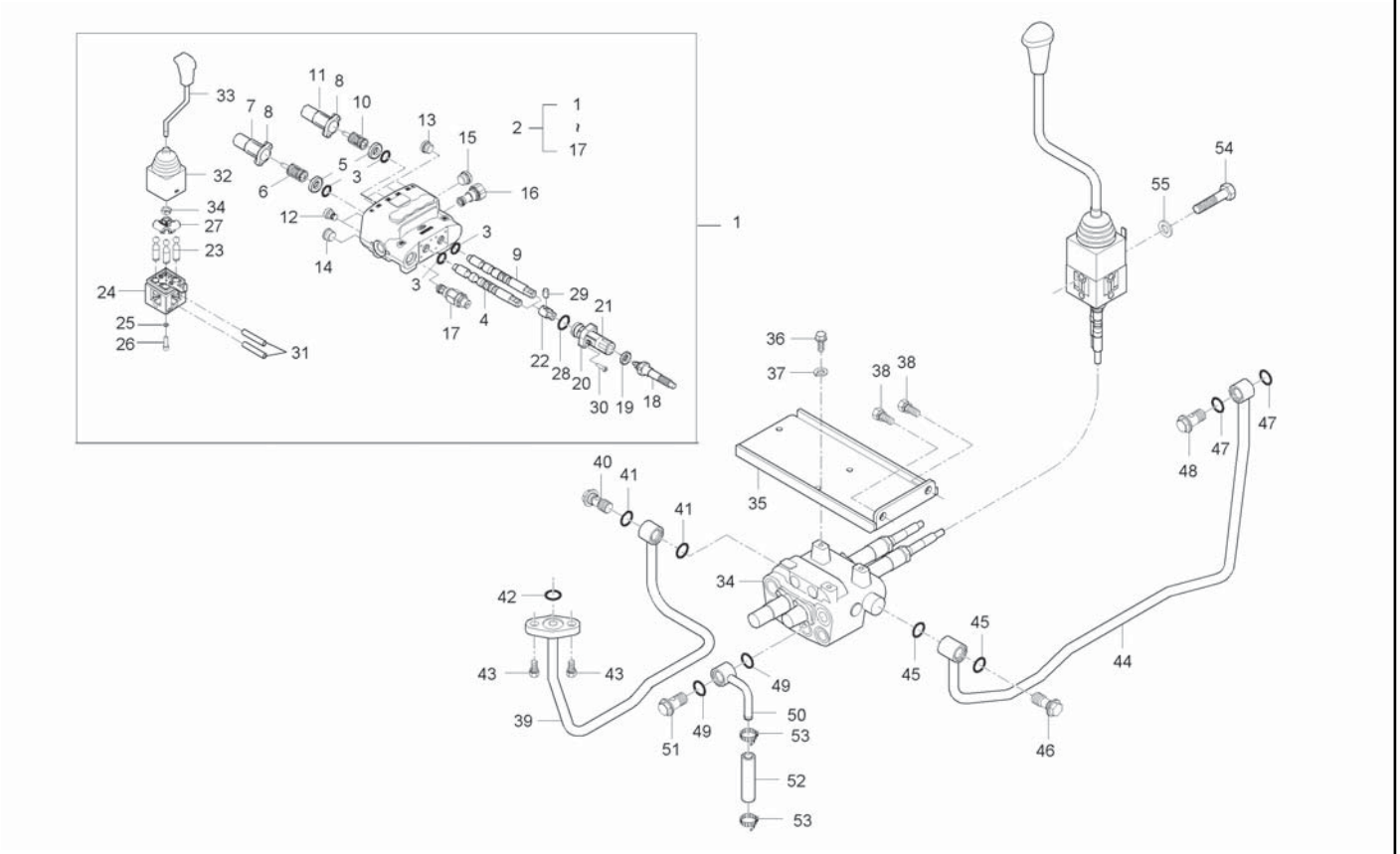

A : CK35-EU , B : CK35H-EU

No.	Part Number	Desciption	Q'TY A	Q'TY B	Q'TY C	Q'TY D	Q'TY E	I.C	Remark
1	T2155-90111	JOYSTICK VALVE ASSY		1					
1	T2155-90201	JOYSTICK VALVE ASSY		1				<--->	
2	26001-0001	VALVE ASSY		1					
2	26001-0002	VALVE ASS'Y		1				<--->	
3	36001-0042	O RING		4					
4	36001-0041	SPOOL, 1		1					
5	36001-0062	COLLAR		2					
6	36001-0049	SPRING KIT ASSY, 1		1					
7	36001-0043	END CAP ASSY, 1		1					
8	36001-0097	BOLT, HEXAGEN		4					
9	36001-0054	SPOOL, 2		1					
10	36001-0058	SPRING KIT ASSY, 2		1					
11	36001-0055	END CAP ASSY, 2		1					
12	36001-0077	CHECK VAVLE ASSY		2					
13	36001-0063	PLUG ASSY, 9X16 18UNF		4					
13	36001-1063	THERMOSRT PLUG		4				<--->	
14	36001-0066	PLUG ASSY, M18XP1.5		1					
15	36001-0069	PLUG ASSY, 3X4 16UNF		1					
15	36001-1069	THERMOSRT PLUG		4				<--->	

----> Old replace New
<-X-> Not interchangeable
<-O-> Interchangeable with another part(s)
<---- New replace Old
<---> Interchangeable

CK35H-T750A

JOYSTICK VALVE GROUP

(CK35H-EU : JT8900001 ~)

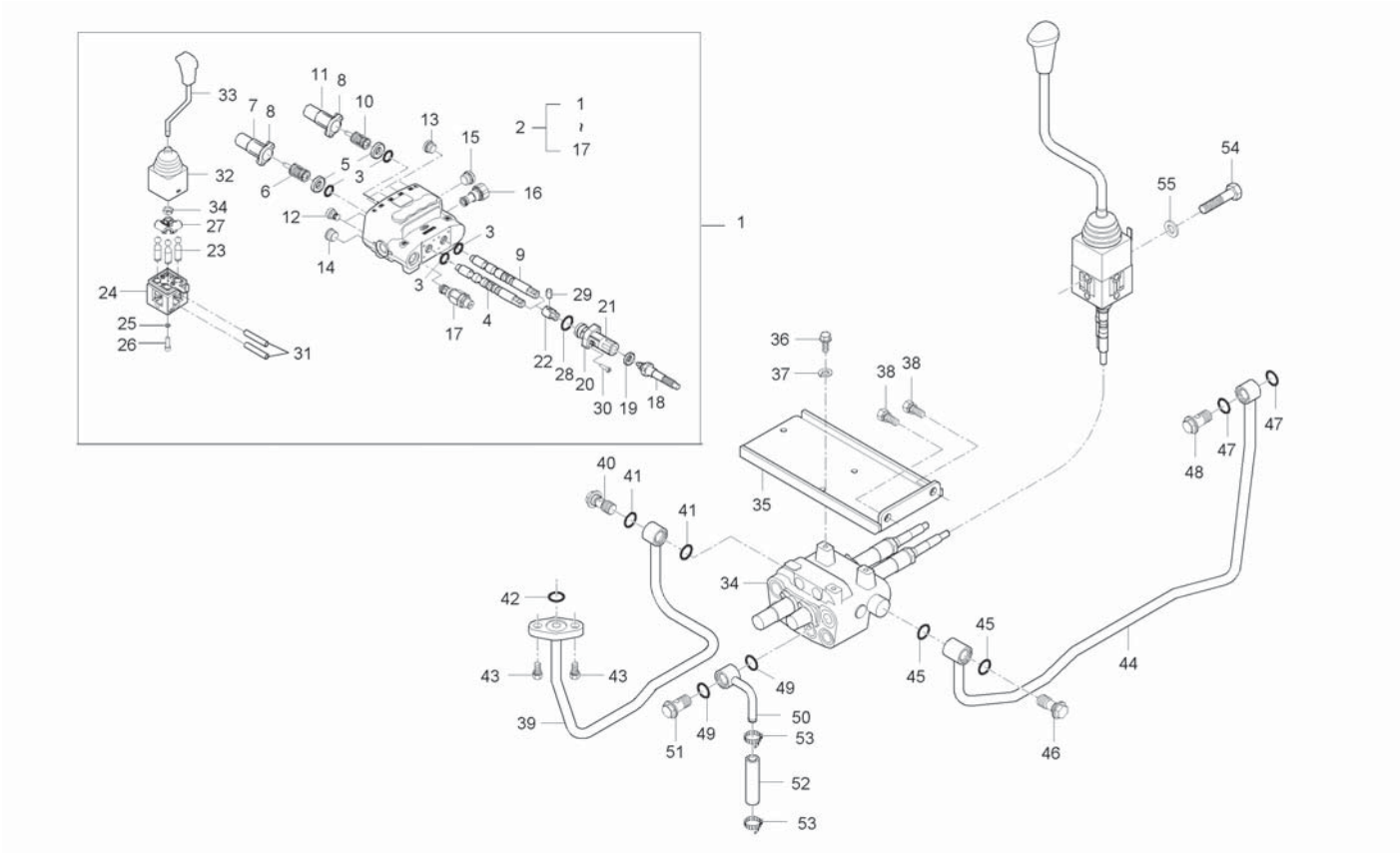

A : CK35-EU , B : CK35H-EU

No.	Part Number	Desciption	Q'TY A	Q'TY B	Q'TY C	Q'TY D	Q'TY E	I.C	Remark
16	36001-0072	JOINT ASSY,		1					
17	36001-0082	RELIFE VALVE ASSY		1					
18	36001-0330	CABLE, 620		2					
19	04717-01600	WASHER, SEAL		2					
20	36001-0130	FLANGE		2					
21	36001-0120	CAP 1, END		2					
22	36001-0150	JOINT		2					
23	36001-0160	PIN A, BOOL		3					
24	26001-0040	BODY ASSY, A		1					
25	36001-0100	WASHER, SPRING M6		1					
26	36001-0080	BOLT, HEXAGEN		1					
27	36001-0140	SELECTOR		1					
28	36001-0030	O RING		2					
29	36001-0010	PIN, CONNECTING		2					
30	36001-0060	BOLT, HEXAGEN		4					
31	36001-0050	RING, SPACER		2					
32	36001-0180	COVER A, HANDLE		1					
33	26001-0010	HANDLE ASSY, C		1					
34	02072-50140	NUT		1					

----> Old replace New
<-X-> Not interchangeable
<-O-> Interchangeable with another part(s)
<---- New replace Old
<---> Interchangeable

CK35H-T750A

JOYSTICK VALVE GROUP

(CK35H-EU : JT8900001 ~)

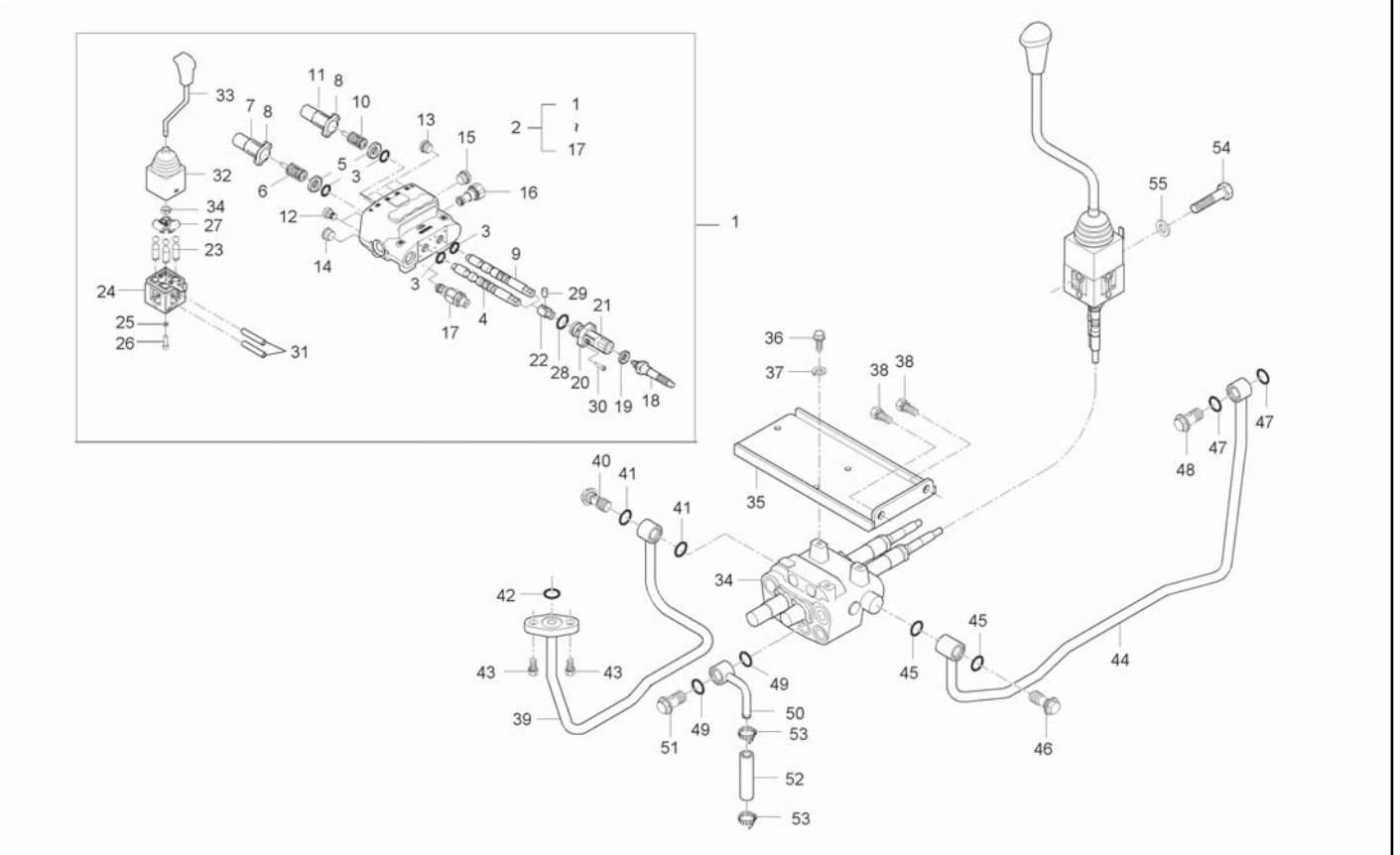

A : CK35-EU , B : CK35H-EU

No.	Part Number	Desciption	Q'TY A	Q'TY B	Q'TY C	Q'TY D	Q'TY E	I.C	Remark
35	T2195-90211	STAY, JOYSTICK VALVE H		1					
36	T2350-90311	BOLT, VALVE CLAMPING		3					
36	T2350-90331	BOLT, VALVE LOOK		3				<--->	
37	04512-50080	SPRING WASHER		3					M08
38	01133-51220	BOLT, WASHER		2					M12*P1.25
39	T2198-90251	TUBE J1, HYDRAULIC		1					
39	T2198-90252	TUBE J1, HYDRAULIC		1				<--->	
40	T4620-37092	BOLT, JOINT		1					
41	04810-00200	O RING		2					
42	04810-00180	O RING		1					
43	01123-50825	BOLT, WASHER		2					M8*P1.25
44	T2185-90264	TUBE J2, HYDRAULIC		1					
45	04810-00200	O RING		2					
46	T4620-37092	BOLT, JOINT		1					
47	04810-00200	O RING		2					
48	T4620-37092	BOLT, JOINT		1					
49	04810-00200	O RING		2					
50	T2185-90222	TUBE J, AUTO RETURN		1					
51	T4520-90042	BOLT,JOINT		1					

----> Old replace New
<-X-> Not interchangeable
<-O-> Interchangeable with another part(s)
<---- New replace Old
<---> Interchangeable

CK35H-T750A

JOYSTICK VALVE GROUP

(CK35H-EU : JT8900001 ~)

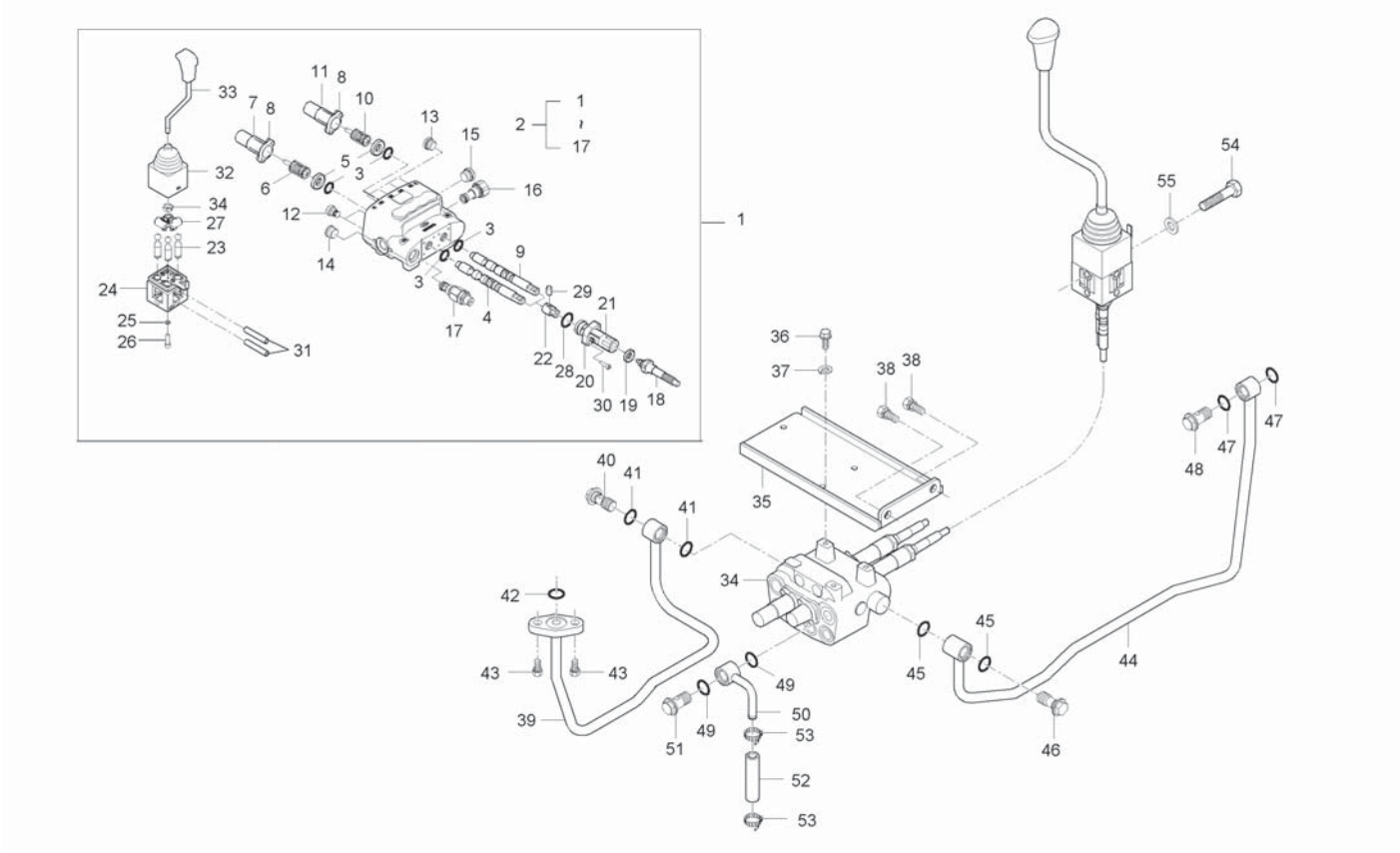

A : CK35-EU , B : CK35H-EU

No.	Part Number	Desciption	Q'TY A	Q'TY B	Q'TY C	Q'TY D	Q'TY E	I.C	Remark
52	T2185-38404	HOSE 1, RETURN		1					
53	09318-89022	CLMAP, HOSE		2					
54	01123-50880	BOLT, WASHER		2					M8*1.25
55	04013-50080	WASHER		2					M8

----> Old replace New
<-X-> Not interchangeable
<-O-> Interchangeable with another part(s)
<---- New replace Old
<---> Interchangeable

CK35M-T750A

JOYSTICK VALVE GROUP

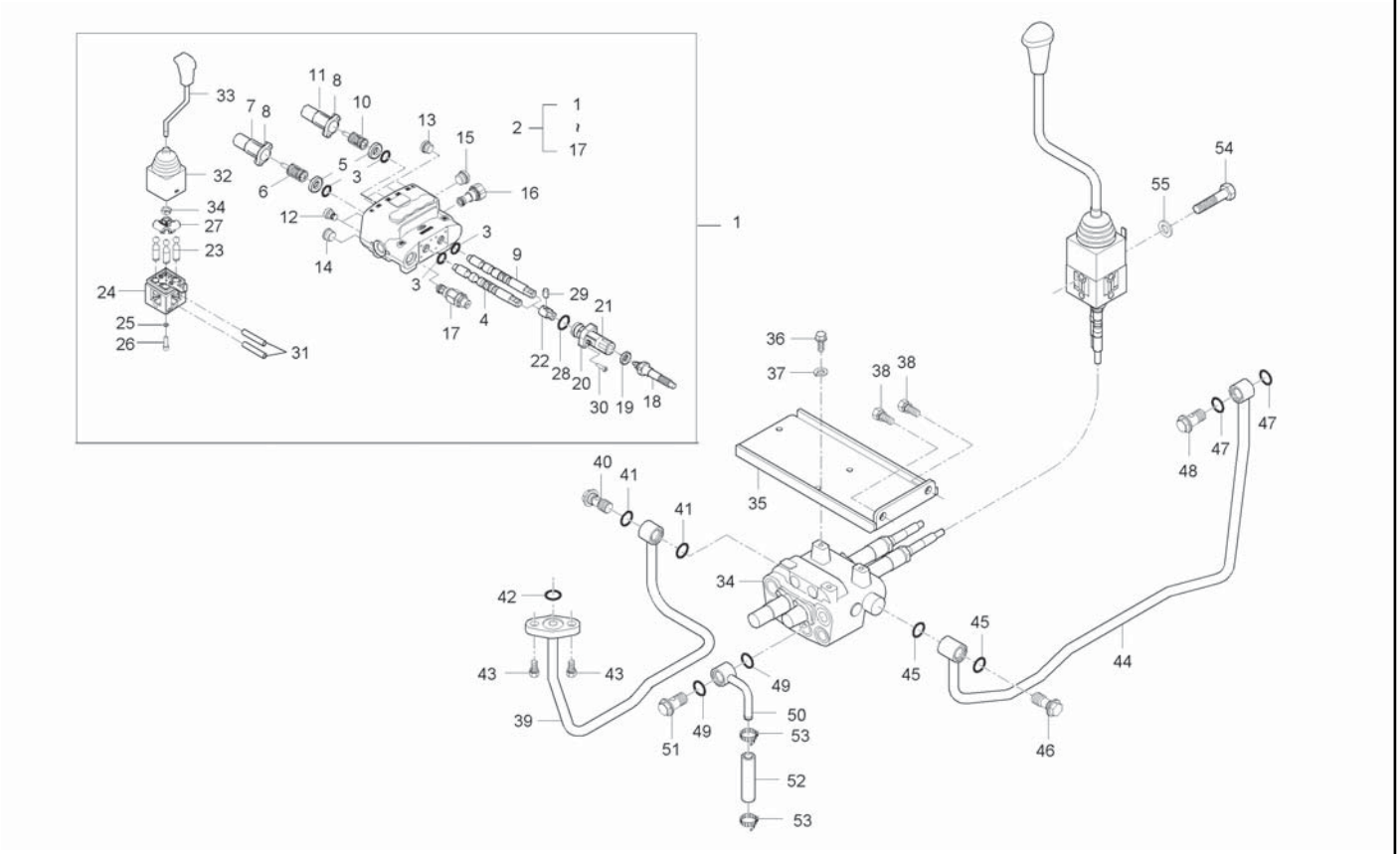

A : CK35-EU , B : CK35H-EU

No.	Part Number	Desciption	Q'TY A	Q'TY B	Q'TY C	Q'TY D	Q'TY E	I.C	Remark
1	T2155-90111	JOYSTICK VALVE ASSY	1						
1	T2155-90201	JOYSTICK VALVE ASSY	1					<--->	
2	26001-0001	VALVE ASSY	1						
2	26001-0002	VALVE ASS'Y	1					<--->	
3	36001-0042	O RING	4						
4	36001-0041	SPOOL, 1	1						
5	36001-0062	COLLAR	2						
6	36001-0049	SPRING KIT ASSY, 1	1						
7	36001-0043	END CAP ASSY, 1	1						
8	36001-0097	BOLT, HEXAGEN	4						
9	36001-0054	SPOOL, 2	1						
10	36001-0058	SPRING KIT ASSY, 2	1						
11	36001-0055	END CAP ASSY, 2	1						
12	36001-0077	CHECK VAVLE ASSY	2						
13	36001-0063	PLUG ASSY, 9X16 18UNF	4						
13	36001-1063	THERMOSRT PLUG	4					<--->	
14	36001-0066	PLUG ASSY, M18XP1.5	1						
15	36001-0069	PLUG ASSY, 3X4 16UNF	1						
15	36001-1069	THERMOSRT PLUG	1					<--->	

----> Old replace New
<-X-> Not interchangeable
<-O-> Interchangeable with another part(s)
<---- New replace Old
<---> Interchangeable

CK35M-T750A

JOYSTICK VALVE GROUP

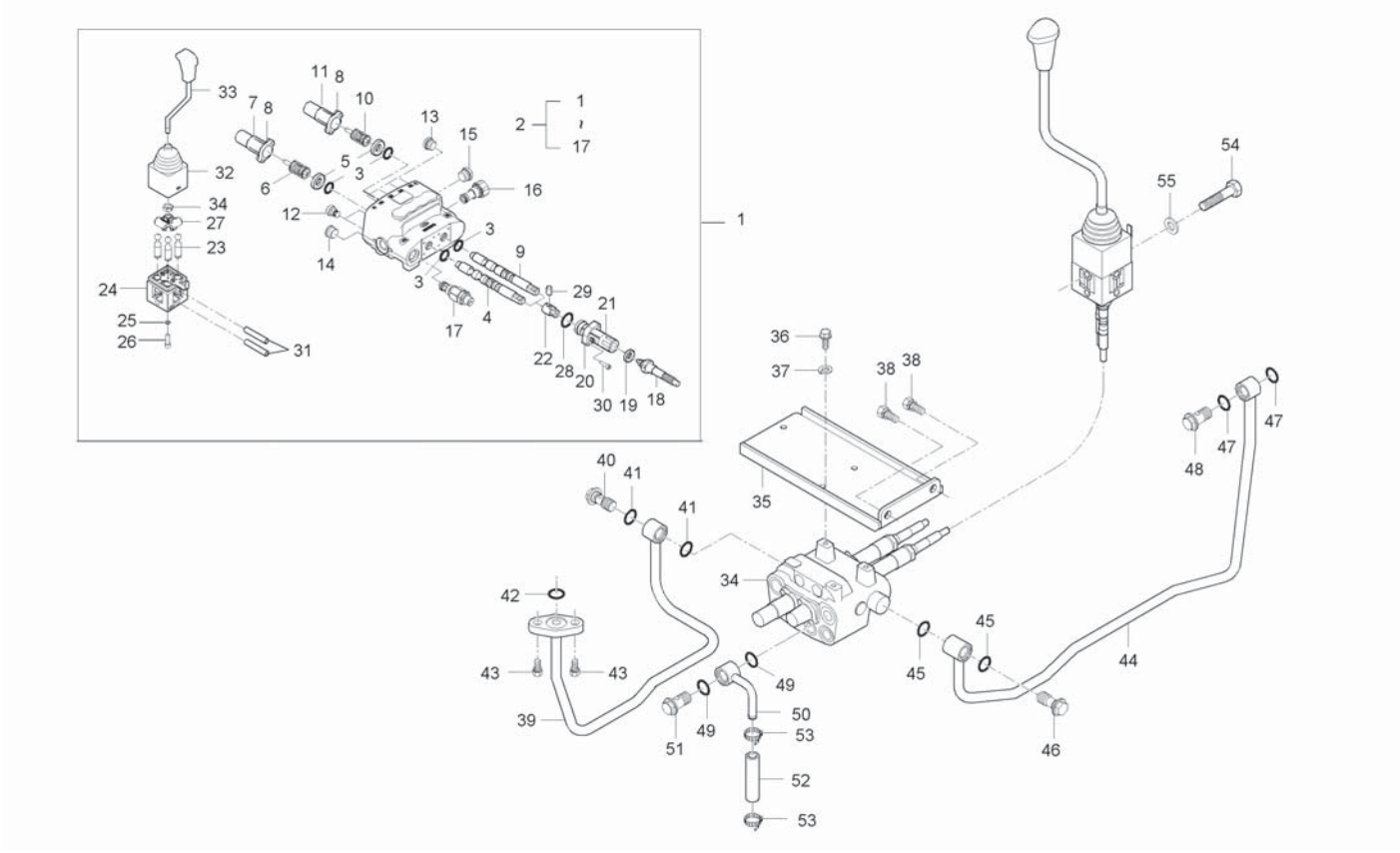

A : CK35-EU , B : CK35H-EU

No.	Part Number	Desciption	Q'TY A	Q'TY B	Q'TY C	Q'TY D	Q'TY E	I.C	Remark
16	36001-0072	JOINT ASSY,	1						
17	36001-0082	RELIFE VALVE ASSY	1						
18	36001-0330	CABLE, 620	2						
19	04717-01600	WASHER, SEAL	2						
20	36001-0130	FLANGE	2						
21	36001-0120	CAP 1, END	2						
22	36001-0150	JOINT	2						
23	36001-0160	PIN A, BOOL	3						
24	26001-0040	BODY ASSY, A	1						
25	36001-0100	WASHER, SPRING M6	1						
26	36001-0080	BOLT, HEXAGEN	1						
27	36001-0140	SELECTOR	1						
28	36001-0030	O RING	2						
29	36001-0010	PIN, CONNECTING	2						
30	36001-0060	BOLT, HEXAGEN	4						
31	36001-0050	RING, SPACER	2						
32	36001-0180	COVER A, HANDLE	1						
33	26001-0010	HANDLE ASSY, C	1						
34	02072-50140	NUT	1						

----> Old replace New
<-X-> Not interchangeable
<-O-> Interchangeable with another part(s)
<---- New replace Old
<---> Interchangeable

CK35M-T750A

JOYSTICK VALVE GROUP

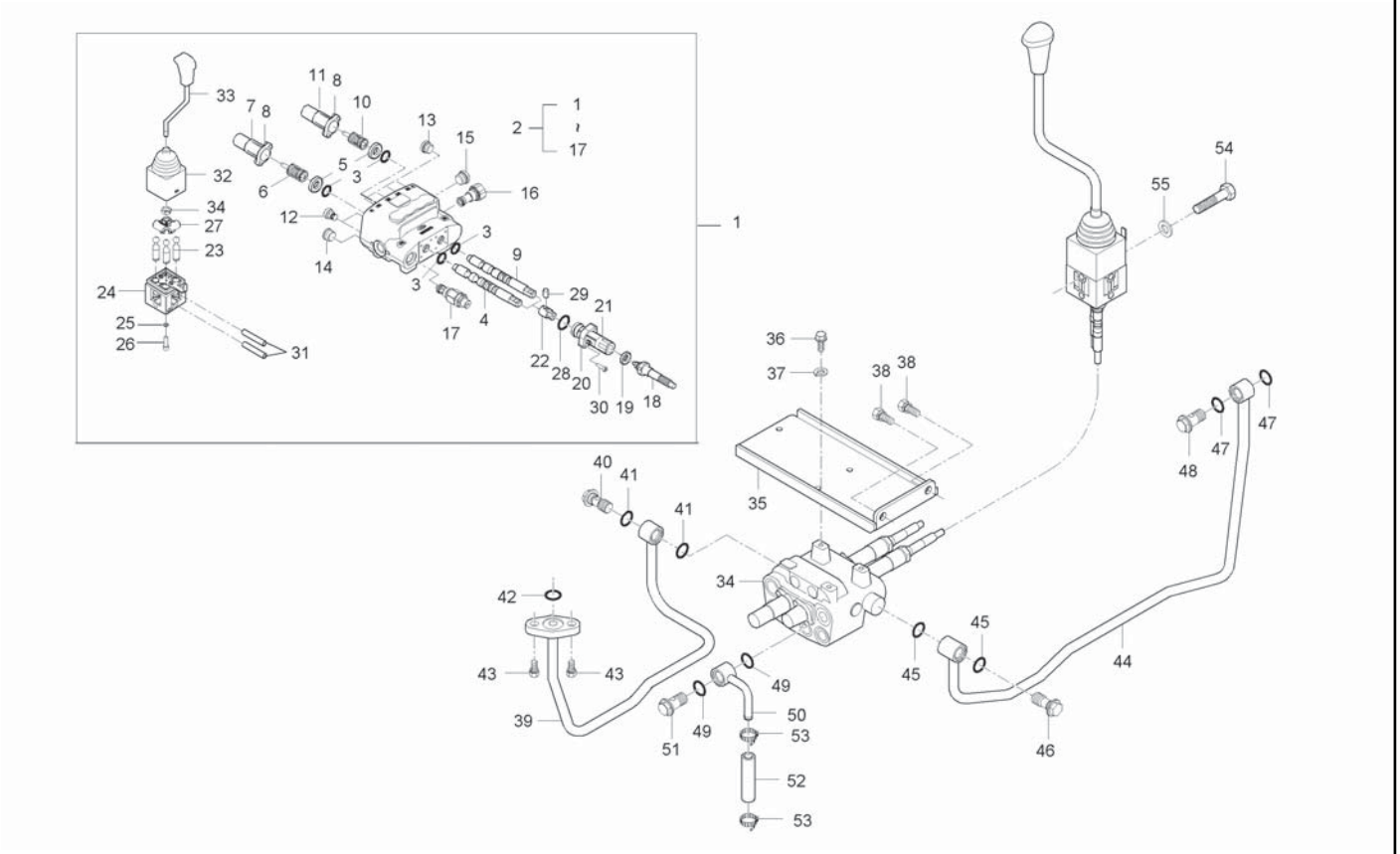

A : CK35-EU , B : CK35H-EU

No.	Part Number	Desciption	Q'TY A	B	C	D	E	I.C	Remark
35	T2185-90212	STAY, JOYSTICK VALVE M	1						
36	T2350-90311	BOLT, VALVE CLAMPING	3						
36	T2350-90331	BOLT, VALVE LOOK	3					<--->	
37	04512-50080	SPRING WASHER	3						
38	01133-51220	BOLT, WASHER	2						
39	T2198-90251	TUBE J1, HYDRAULIC	1						
39	T2198-90252	TUBE J1, HYDRAULIC	1					<--->	
40	T4620-37092	BOLT, JOINT	1						
41	04810-00200	O RING	2						
42	04810-00180	O RING	1						
43	01123-50825	BOLT, WASHER	2						
44	T2185-90264	TUBE J2, HYDRAULIC	1						
45	04810-00200	O RING	2						
46	T4620-37092	BOLT, JOINT	1						
47	04810-00200	O RING	2						
48	T4620-37092	BOLT, JOINT	1						
49	04810-00200	O RING	2						
50	T2185-90222	TUBE J, AUTO RETURN	1						
51	T4520-90042	BOLT,JOINT	1						

----> Old replace New
<-X-> Not interchangeable
<-O-> Interchangeable with another part(s)
<---- New replace Old
<---> Interchangeable

CK35M-T750A

JOYSTICK VALVE GROUP

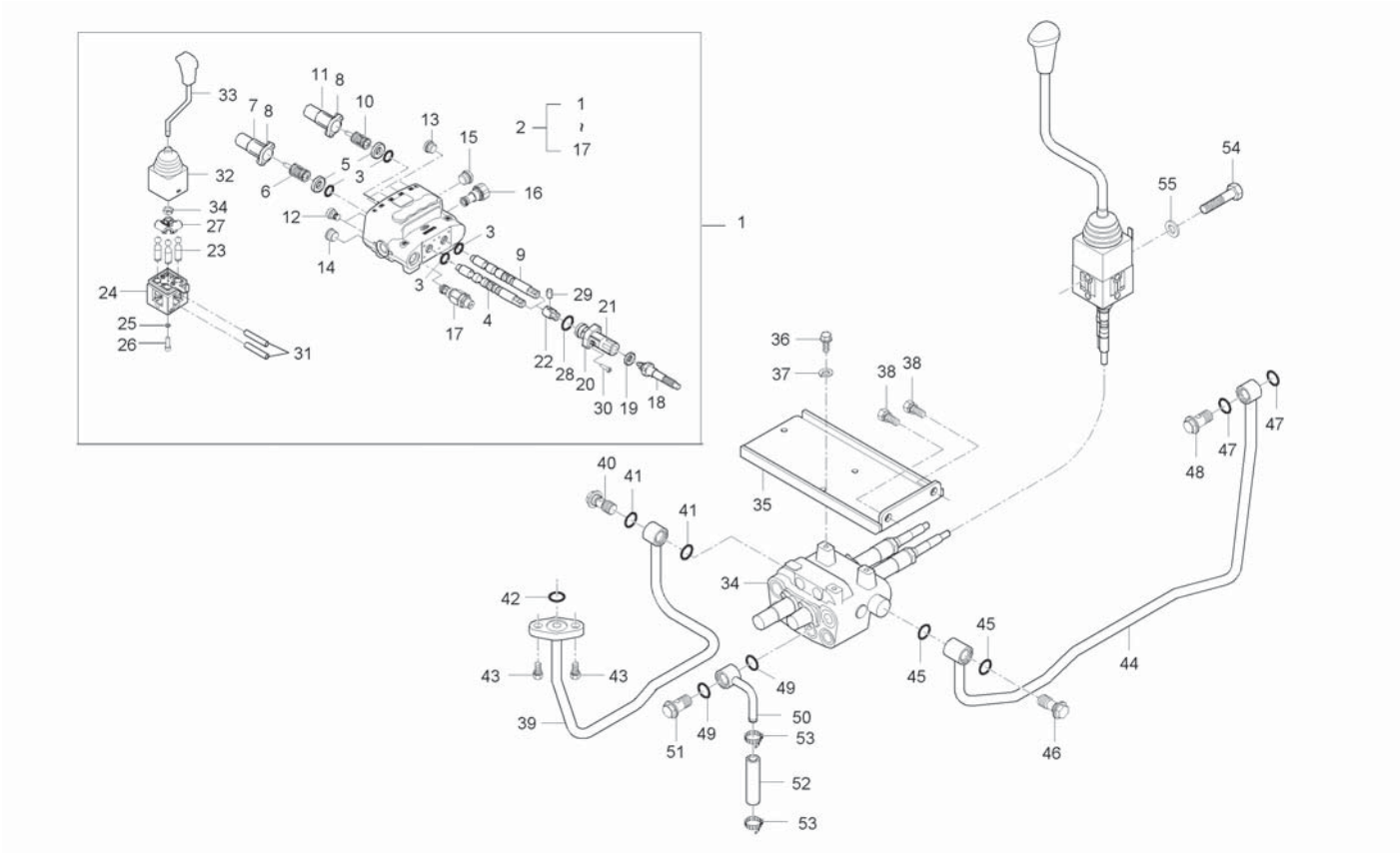

A : CK35-EU , B : CK35H-EU

No.	Part Number	Desciption	Q'TY A	B	C	D	E	I.C	Remark
52	T2185-38404	HOSE 1, RETURN	1						
53	09318-89022	CLMAP, HOSE	2						
54	01123-50880	BOLT, WASHER	2						
55	04013-50080	WASHER	2						

----> Old replace New
<-X-> Not interchangeable
<-O-> Interchangeable with another part(s)
<---- New replace Old
<---> Interchangeable

CK30M-T760-2A REMOTE HYDRAULIC VALVE GROUP

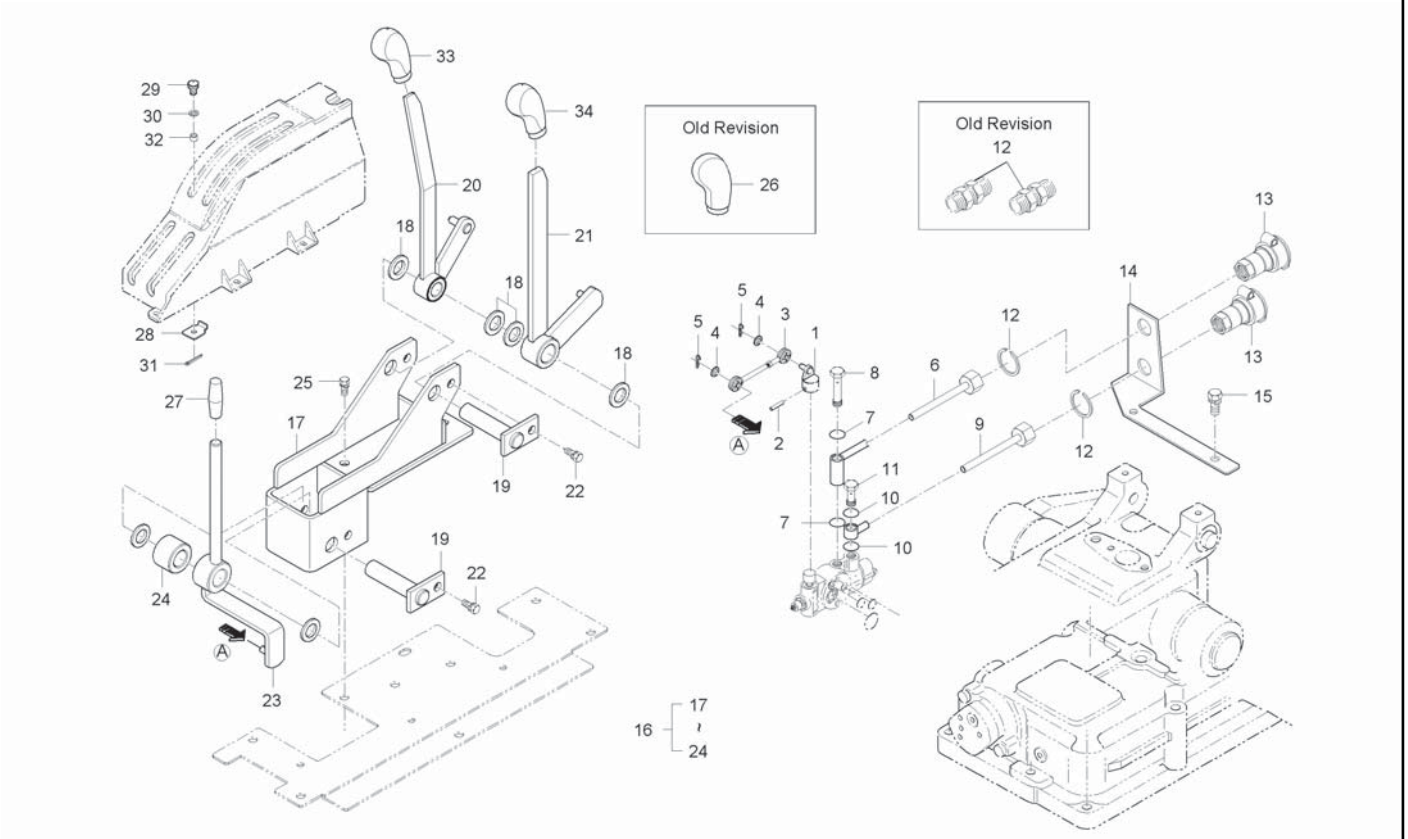

A : CK35-EU , B : CK35H-EU

No.	Part Number	Desciption	Q'TY A	Q'TY B	Q'TY C	Q'TY D	Q'TY E	I.C	Remark
1	T2155-68491	LEVER1(DOUBLE)	1	1					
2	T2610-39572	SCREW, HOLDER	1	1					
3	T4686-68521	ROD 2, DOUBLE ACTING	1	1					
4	04013-50080	WASHER	2	2					M8
5	05525-50800	PIN, SNAP	2	2					
6	T2155-90012	TUBE A, HYD	1	1					
7	04810-00200	O RING	2	2					
8	T4520-37372	BOLT 2, JOINT	1	1					
9	T2155-90021	TUBE B, HYD	1	1					
10	04810-00200	O RING	2	2					
11	T4520-90042	BOLT,JOINT	1	1					
12	04612-00220	SNAP RING	2	2					
13	T4520-90093	COUPLER SOCKET ASSY	2	2					
14	T2181-90072	SUPPORT, SOCKET	1	1					
15	01133-51018	BOLT, WASHER	2	2					
16	T2185-65233BB	LEVER ASSY, HYDRAULIC	1	1					
17	T2185-65433	BRACKET, POSITION TRACTION	1	1					
18	T4810-66721	WASHER	5	5					
19	T2185-66531	SHAFT, POSITION DRAFT	2	2					

----> Old replace New
<-X-> Not interchangeable
<-O-> Interchangeable with another part(s)
<---- New replace Old
<---> Interchangeable

CK30M-T760-2A REMOTE HYDRAULIC VALVE GROUP

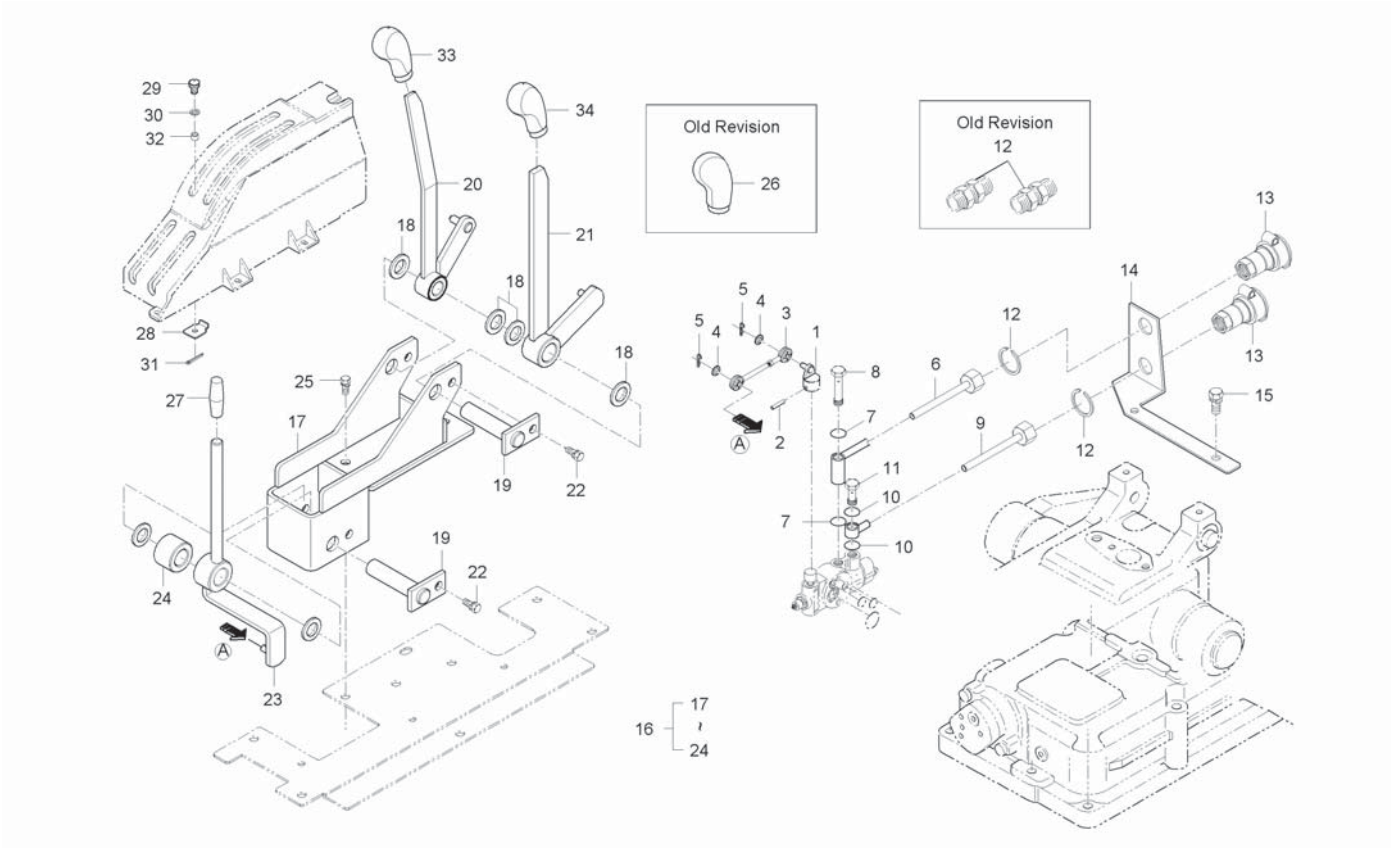

A : CK35-EU , B : CK35H-EU

No.	Part Number	Desciption	Q'TY A	Q'TY B	Q'TY C	Q'TY D	Q'TY E	I.C	Remark
20	T2185-65413	LEVER, POSITING CONTROL	1	1					
21	T2185-65514	LEVER, DRAWER CONTROL	1	1					
22	01123-50816	BOLT, WASHER	2	2					M8*P1.25
23	T2185-65353BB	LEVER, DOUBLE ACTING LH	1	1					
24	T2185-66721	SPACER	1	1					
25	01123-50820	BOLT, WASHER	3	3					M8*P1.25
26	T2610-24461	GRIP, SUBMISSION	2	2					
27	T2360-33192	GRIP, HST FIXING	1	1					
27	T2185-71221	GRIP, GRAY	1	1				<----	
28	T2350-95472	STOPPER	2	2					
29	55571-3238-1	BOLT, RESIN	2	2					
30	04015-50060	WASHER, PLAIN	2	2					M6
31	05511-50215	PIN, SPLIT	2	2					
32	T4520-83301	SPACER	2	2					
33	T2198-24461	GRIP	1	1					
34	T2185-24461	GRIP	1	1					

----> Old replace New
<-X-> Not interchangeable
<-O-> Interchangeable with another part(s)
<---- New replace Old
<---> Interchangeable

CK30H-T765-1A DETENT DOUBLE ACTING VALVE GROUP

(CK35H-EU : JT8900023 ~)

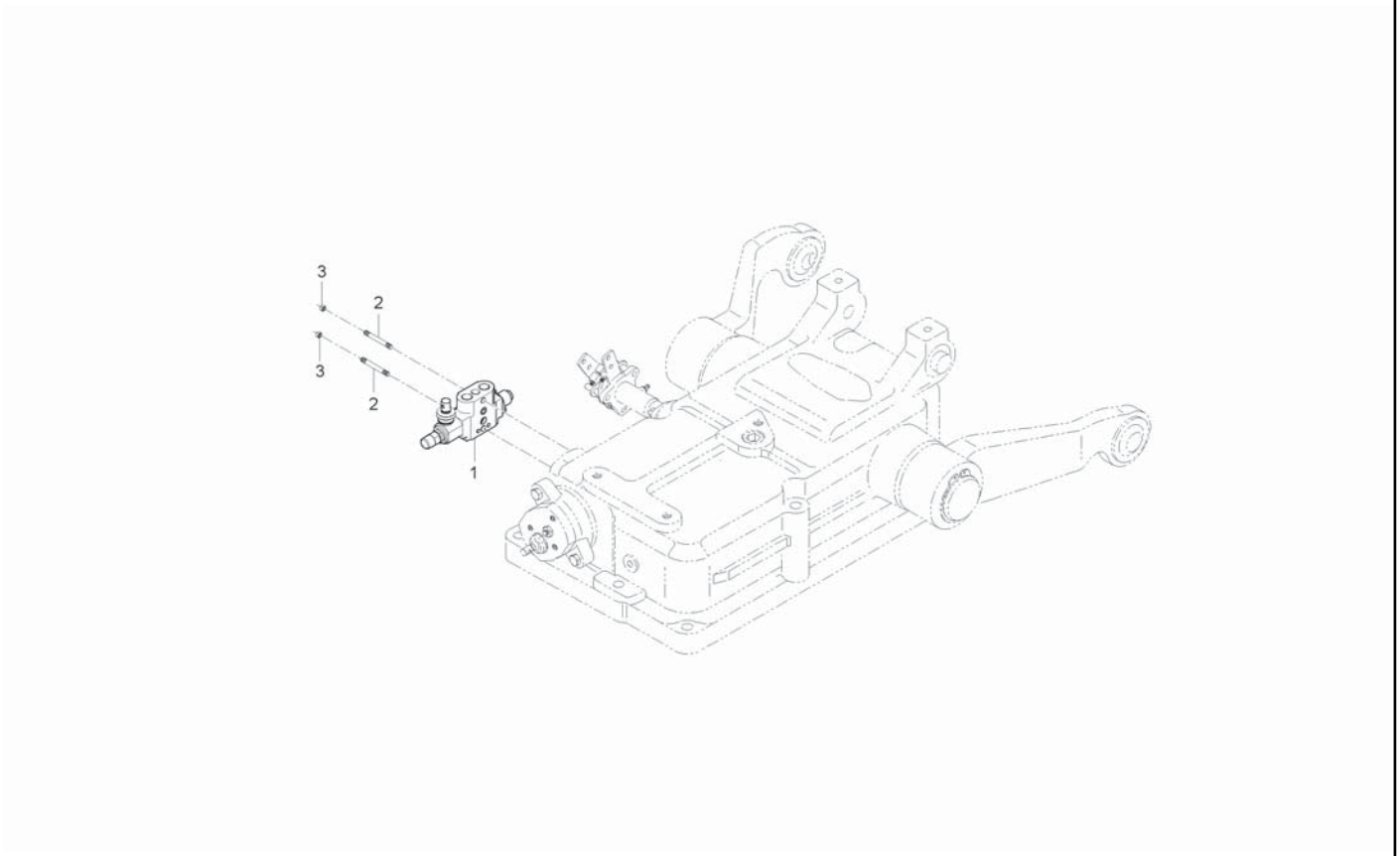

A : CK35-EU , B : CK35H-EU

No.	Part Number	Desciption	Q'TY A	Q'TY B	Q'TY C	Q'TY D	Q'TY E	I.C	Remark
1	T2610-39031	DOUBLE ACTING VALVE, DETENT	1	1					
2	T2610-37862	STUD, M10X91MM	2	2					
3	41182-5151-1	U-NUT	2	2					

----> Old replace New
<-X-> Not interchangeable
<-O-> Interchangeable with another part(s)
<---- New replace Old
<---> Interchangeable

CK30M-T765-1A DETENT DOUBLE ACTING VALVE GROUP

(CK35H-EU : ~ JT8900022)

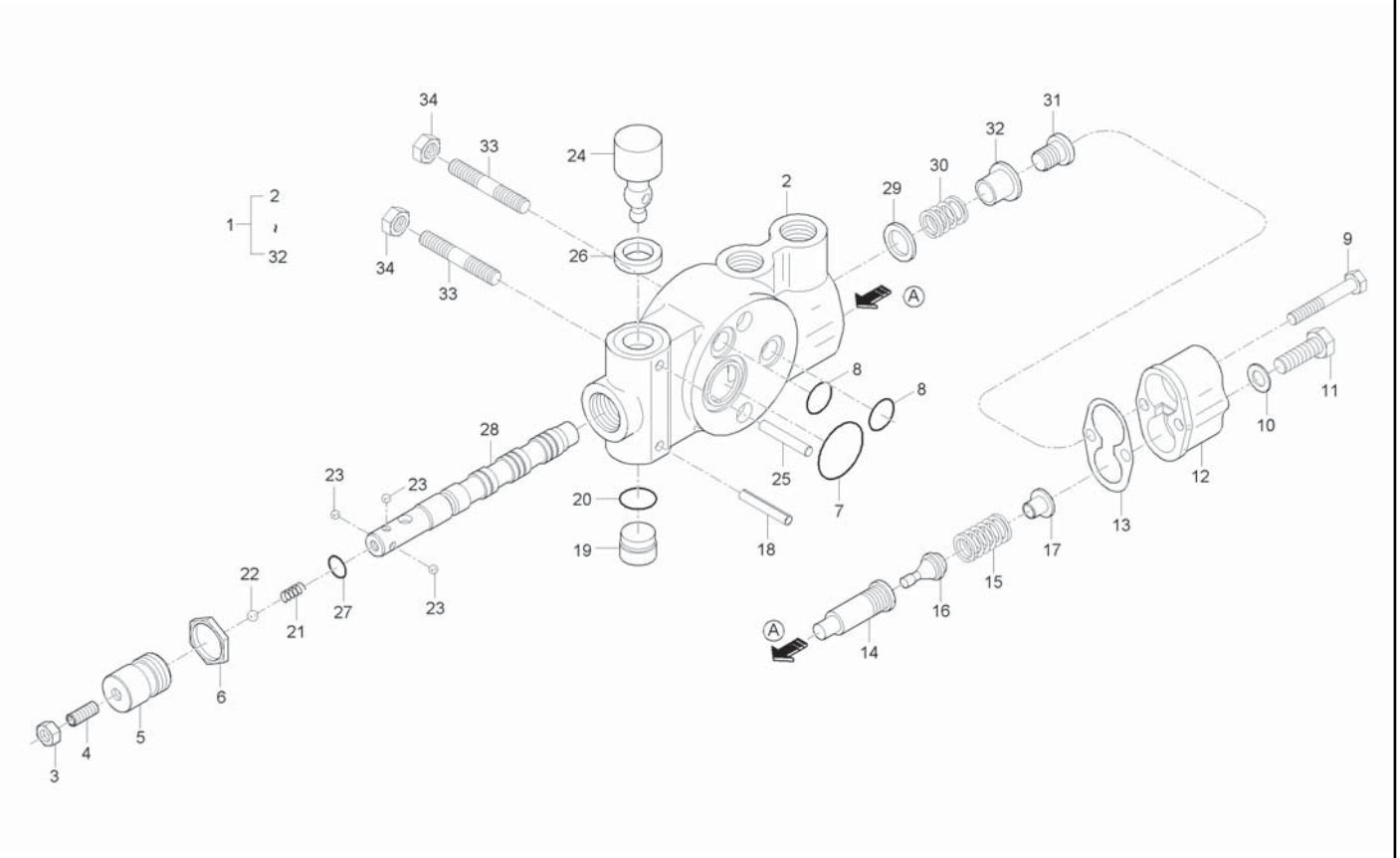

A : CK35-EU , B : CK35H-EU

No.	Part Number	Desciption	Q'TY A	Q'TY B	Q'TY C	Q'TY D	Q'TY E	I.C	Remark
1	008264	DETENT DOUBLE ACTING VALVE ASSY	1	1					
2	200024010	BODY	1	1					
3	310006000	NUT	1	1					
4	300017000	SCREW	1	1					
5	410003000	COVER	1	1					
6	310021000	NUT	1	1					
7	360037000	O-RING	1	1					
8	360013000	O-RING	2	2					
9	300091000	SCREW	2	2					
10	320048000	SEAL WASHER	2	2					
11	300070000	SCREW	1	1					
12	200001000	COVER	1	1					
13	360047000	GASKET	1	1					
14	200007180	VALVE SEAT	1	1					
15	350027000	SPRING	1	1					
16	200002050	VALVE	1	1					
17	200004020	VALVE SEAT	1	1					
18	380015000	PIN	1	1					
19	440031000	PLUG	1	1					

----> Old replace New
<-X-> Not interchangeable
<-O-> Interchangeable with another part(s)
<---- New replace Old
<---> Interchangeable

CK30M-T765-1A DETENT DOUBLE ACTING VALVE GROUP

(CK35H-EU : ~ JT8900022)

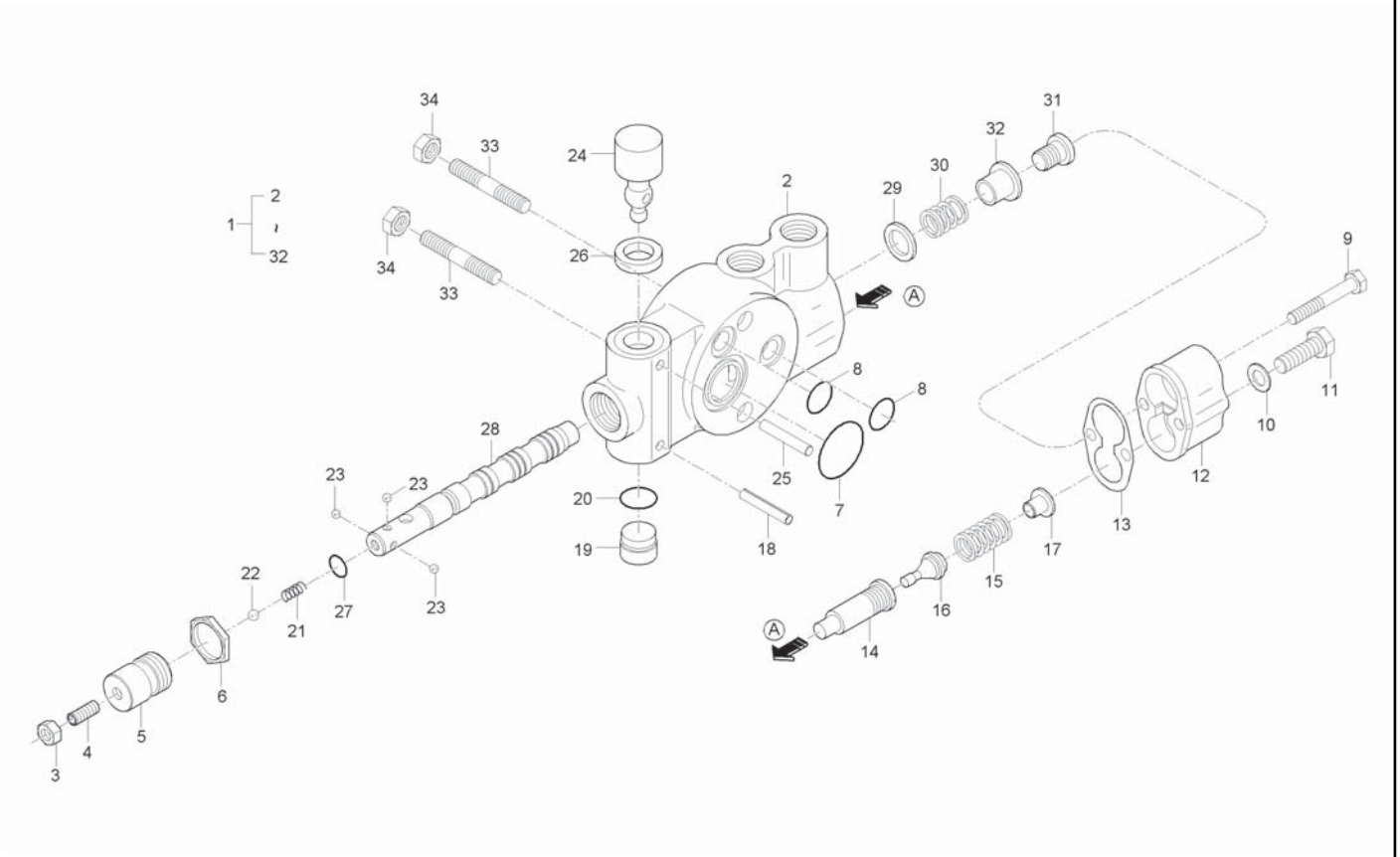

A : CK35-EU , B : CK35H-EU

No.	Part Number	Desciption	Q'TY A	Q'TY B	Q'TY C	Q'TY D	Q'TY E	I.C	Remark
20	360011000	O-RING	1	1					
21	350073000	SPRING	1	1					
22	450007000	BALL	1	1					
23	450006000	BALL	3	3					
24	200027100	ARTICULATION	1	1					
25	460006000	PIN	1	1					
26	360049000	GASKET	1	1					
27	360046000	O-RING	1	1					
28	200005060	PILOT SPOOL	1	1					
29	320047000	PIN	1	1					
30	350024000	SPRING	1	1					
31	300090000	SCREW	1	1					
32	400049000	SPACER	1	1					
33	T2610-37871	STUD, M10X73MM	2	2					
34	41182-5151-1	U-NUT	2	2					

----> Old replace New
<-X-> Not interchangeable
<-O-> Interchangeable with another part(s)
<---- New replace Old
<---> Interchangeable

CK30M-T770A DOWN SPEED CONTROL GROUP

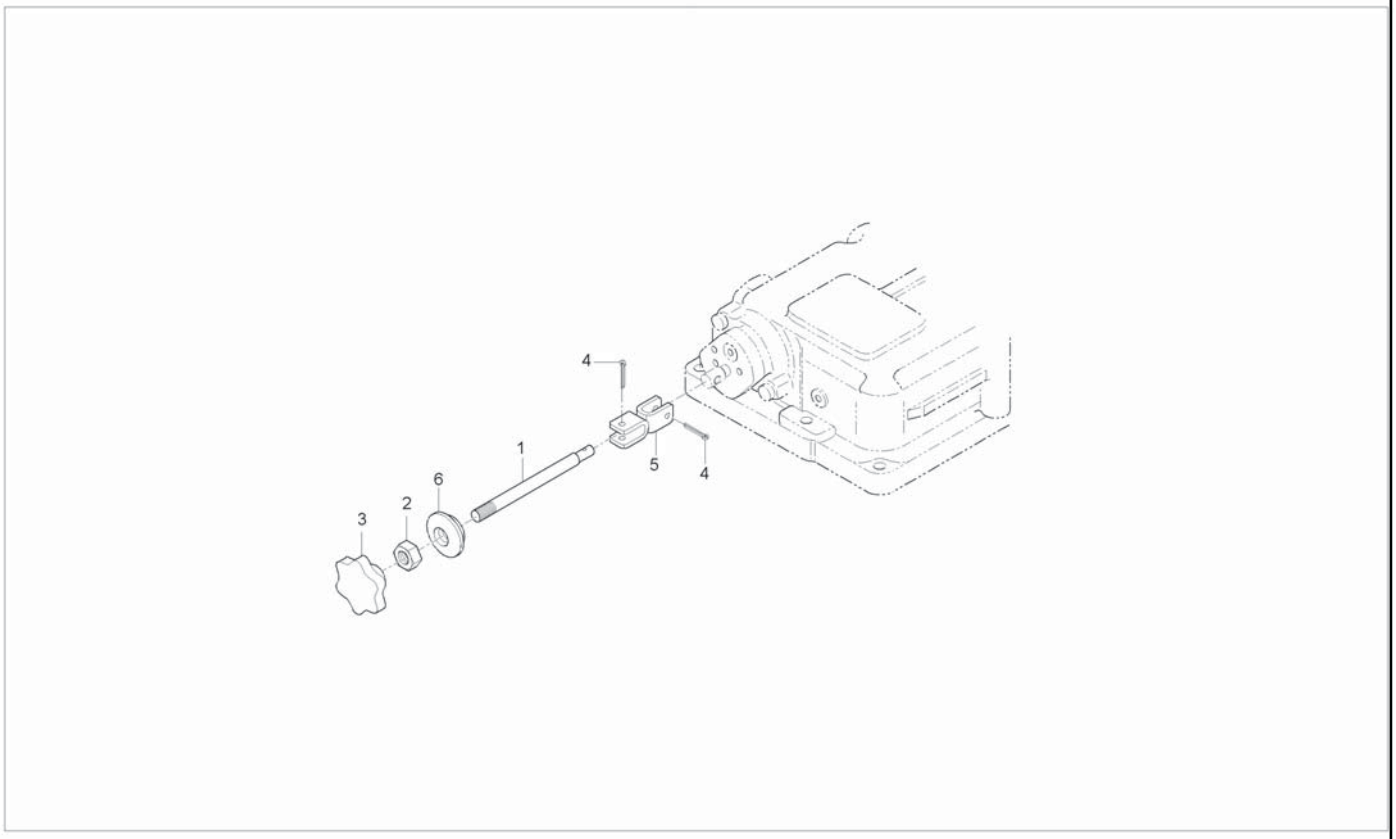

A : CK35-EU , B : CK35H-EU

No.	Part Number	Desciption	Q'TY A	Q'TY B	Q'TY C	Q'TY D	Q'TY E	I.C	Remark
1	T2185-65371	ROD, MLS	1	1					
2	02176-50100	NUT	1	1					M10X1.25
3	T2610-39882	GRIP	1	1					
4	05511-50425	PIN, SPLIT	2	2					DIA4*25
4	05511-50325	PIN, SPLIT	2	2				<--->	
4	05511-50320	PIN, SPLIT	2	2				<--->	M3.2*20
5	T4628-66211	U	1	1					
6	T4620-50592	RUBBER, CUSHION FR GRILL BRACKET	1	1					
6	31355-2949-1	GROMMET	1	1				<--->	

----> Old replace New
<-X-> Not interchangeable
<-O-> Interchangeable with another part(s)
<---- New replace Old
<---> Interchangeable

CK30M-T010A

AIR CLEANER GROUP

(CK35-EU : ~ FT8100016)

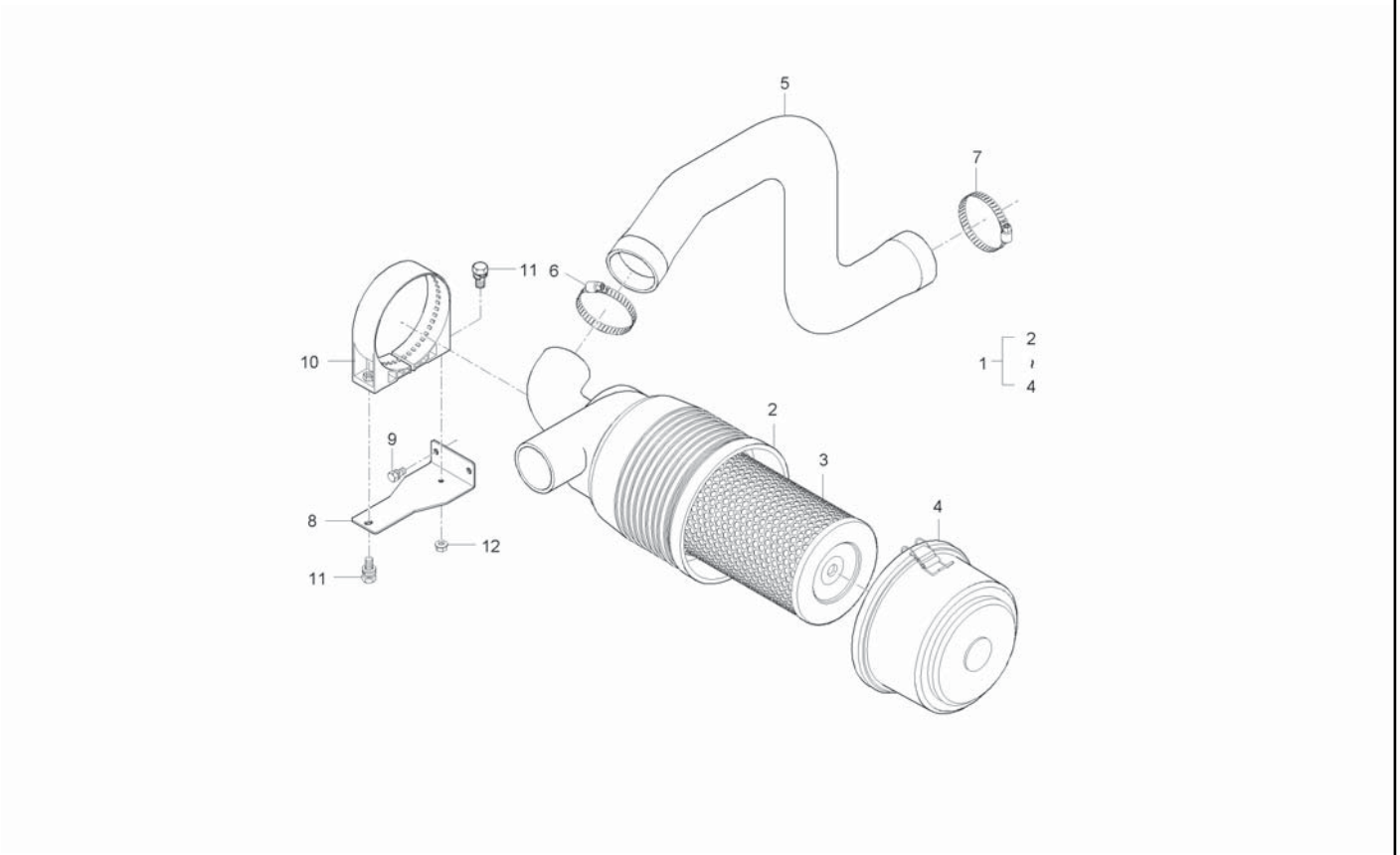

A : CK35-EU , B : CK35H-EU

No.	Part Number	Desciption	Q'TY A	Q'TY B	Q'TY C	Q'TY D	Q'TY E	I.C	Remark
1	T4624-11011	AIR CLEANER ASSY	1						
2	T4624-11111	BODY, AIR CLEANER	1						
3	E7230-11081	ELEMENT ASSY, 1	1						
4	E7230-11111002	COVER ASSY	1						
5	T2185-11622	HOSE, INPUT	1						
6	KX97382-S51	CLAMP ASSY	1						
7	KX97382-S51	CLAMP ASSY	1						
8	T2185-11732	BRACKET 2, AIR CREANER SUPPORTER	1						
9	01123-50816	BOLT, WASHER	2						
10	E7230-11222	HOLDER, AIR CLEANER	1						
11	01125-50830	BOLT, WASHER	2						
12	02751-50080	FLANGE NUT	1						

----> Old replace New
<-X-> Not interchangeable
<-O-> Interchangeable with another part(s)

<---- New replace Old
<---> Interchangeable

CK35M-T010A

AIR CLEANER GROUP

(CK35-EU : GT8100001 ~)

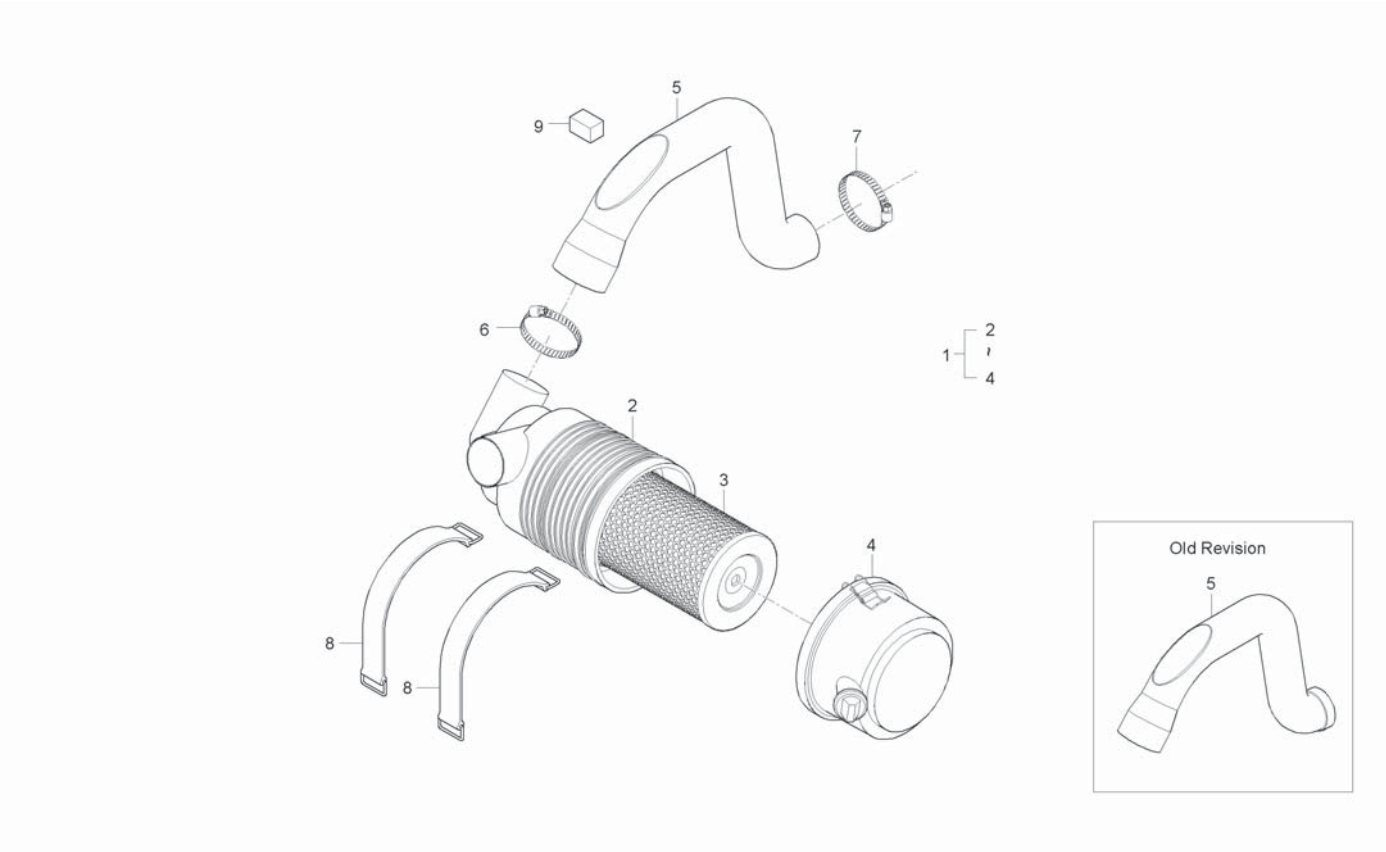

A : CK35-EU , B : CK35H-EU

No.	Part Number	Desciption	Q'TY A	Q'TY B	Q'TY C	Q'TY D	Q'TY E	I.C	Remark
1	T4624-11011	AIR CLEANER ASSY	1	1					
1	T4624-11012	AIR CLEANER ASSY	1	1				<--->	
2	T4624-11111	BODY, AIR CLEANER	1	1					
3	E7230-11081	ELEMENT ASSY, 1	1	1					
4	E7230-11111002	COVER ASSY	1	1					
5	T2185-11622	HOSE, INPUT	1	1					
5	T2185-11623	HOSE, INPUT	1	1				<----	
5	T2185-11624	HOSE, INPUT	1	1				<----	
6	KX97382-S51	CLAMP ASSY	1	1					
7	KX97382-S51	CLAMP ASSY	1	1					
8	38325-1398-1	BAND, AIR CLEANER	2	2					
9	T2350-50031	SPONGE	1	1					

----> Old replace New
<-X-> Not interchangeable
<-O-> Interchangeable with another part(s)
<---- New replace Old
<---> Interchangeable

CK30M-T020A

MUFFLER GROUP

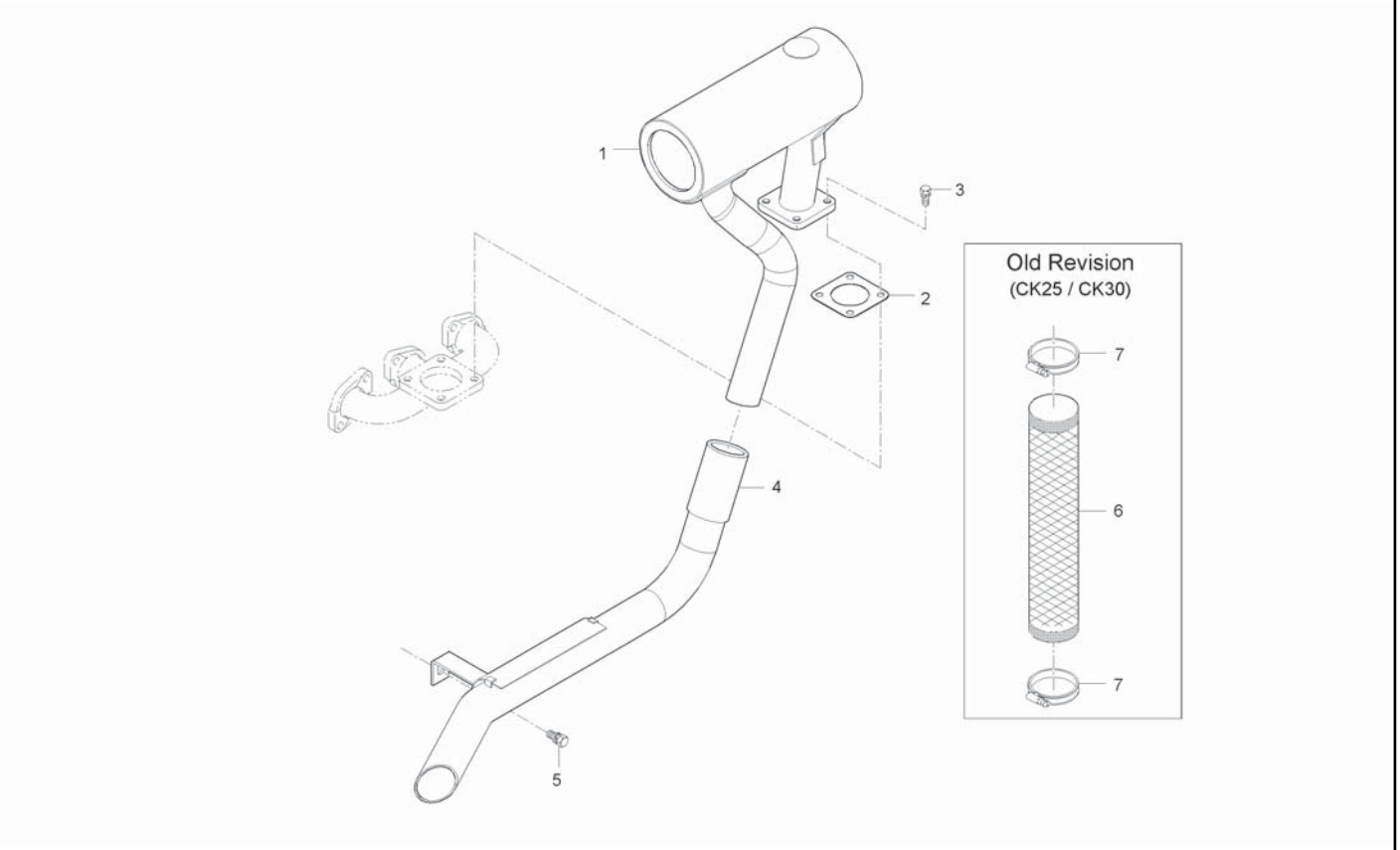

A : CK35-EU , B : CK35H-EU

No.	Part Number	Desciption	Q'TY A	Q'TY B	Q'TY C	Q'TY D	Q'TY E	I.C	Remark
1	T2185-12114	MUFFLER	1	1					
2	E5800-12373	GASCKET, MUFFLER	1	1					
3	01123-50825	BOLT, WASHER	4	4					M8*P1.25
4	T2185-12124	TUBE, EXHAUST	1	1					
5	01123-50820	BOLT, WASHER	1	1					M8*P1.25
6	T2567-12152	TUBE, HEATPROOF	1	1					
7	T2540-38251	BAND, HOSE	2	2					

----> Old replace New
<-X-> Not interchangeable
<-O-> Interchangeable with another part(s)
<---- New replace Old
<---> Interchangeable

CK350-T020A

MUFFLLER GROUP

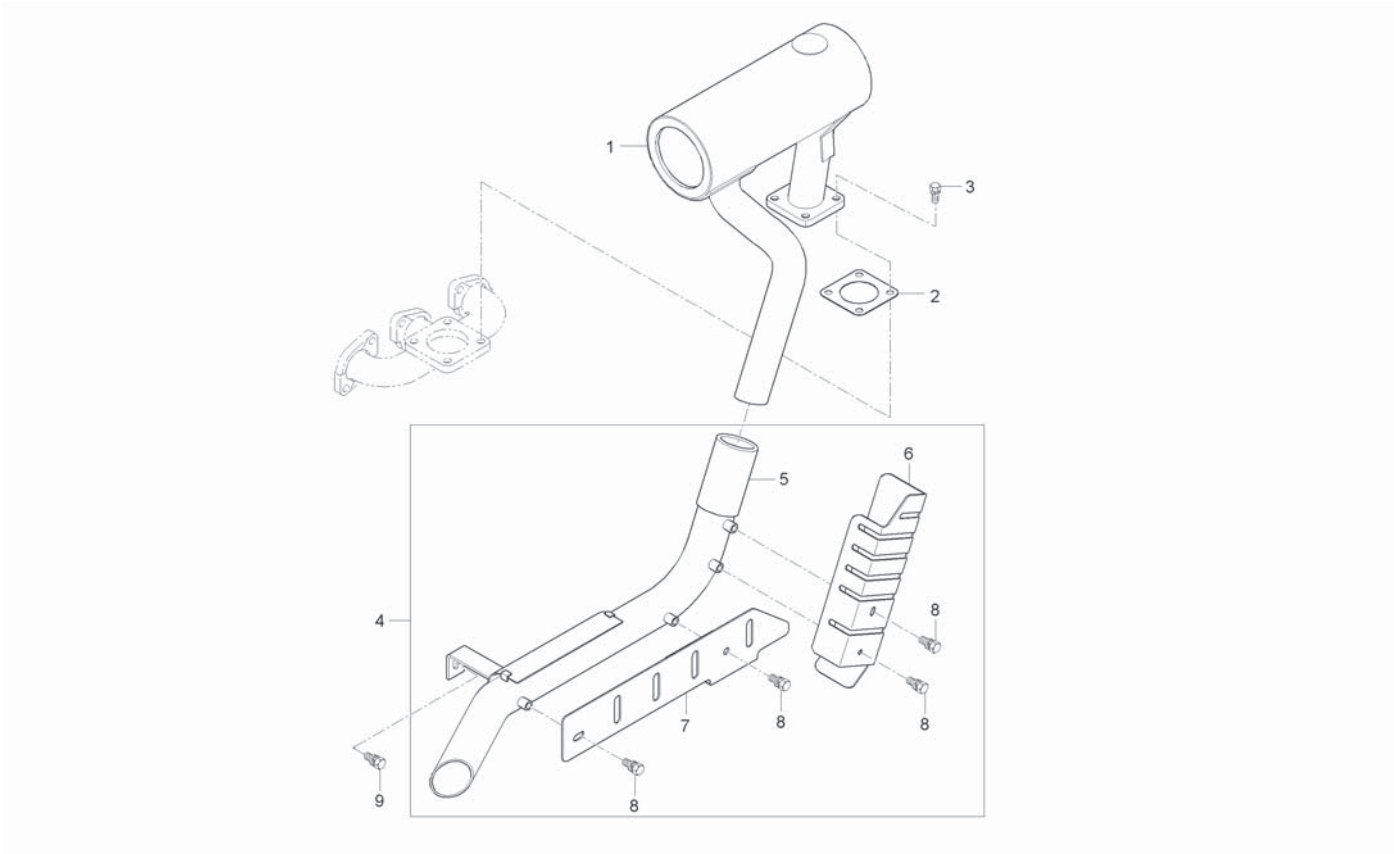

A : CK35-EU , B : CK35H-EU

No.	Part Number	Desciption	Q'TY A	Q'TY B	Q'TY C	Q'TY D	Q'TY E	I.C	Remark
1	T2185-12114	MUFFLER	1	1					
2	E5800-12373	GASCKET, MUFFLER	1	1					
3	01123-50825	BOLT, WASHER	4	4					M8*P1.25
4	T2180-12111		1	1					
5	T2180-12121	TUBE, EXHAUST	1	1					
6	T2180-12161	()	1	1					
7	T2180-12171	()	1	1					
8	T2180-55421	FLANGE BOLT	4	4					
9	01125-50820	BOLT, WASHER	1	1					M8*P1.25

----> Old replace New
<-X-> Not interchangeable
<-O-> Interchangeable with another part(s)
<---- New replace Old
<---> Interchangeable

CK30M-T030A

RADIATOR GROUP

(CK35-EU : ~ FT8100016)

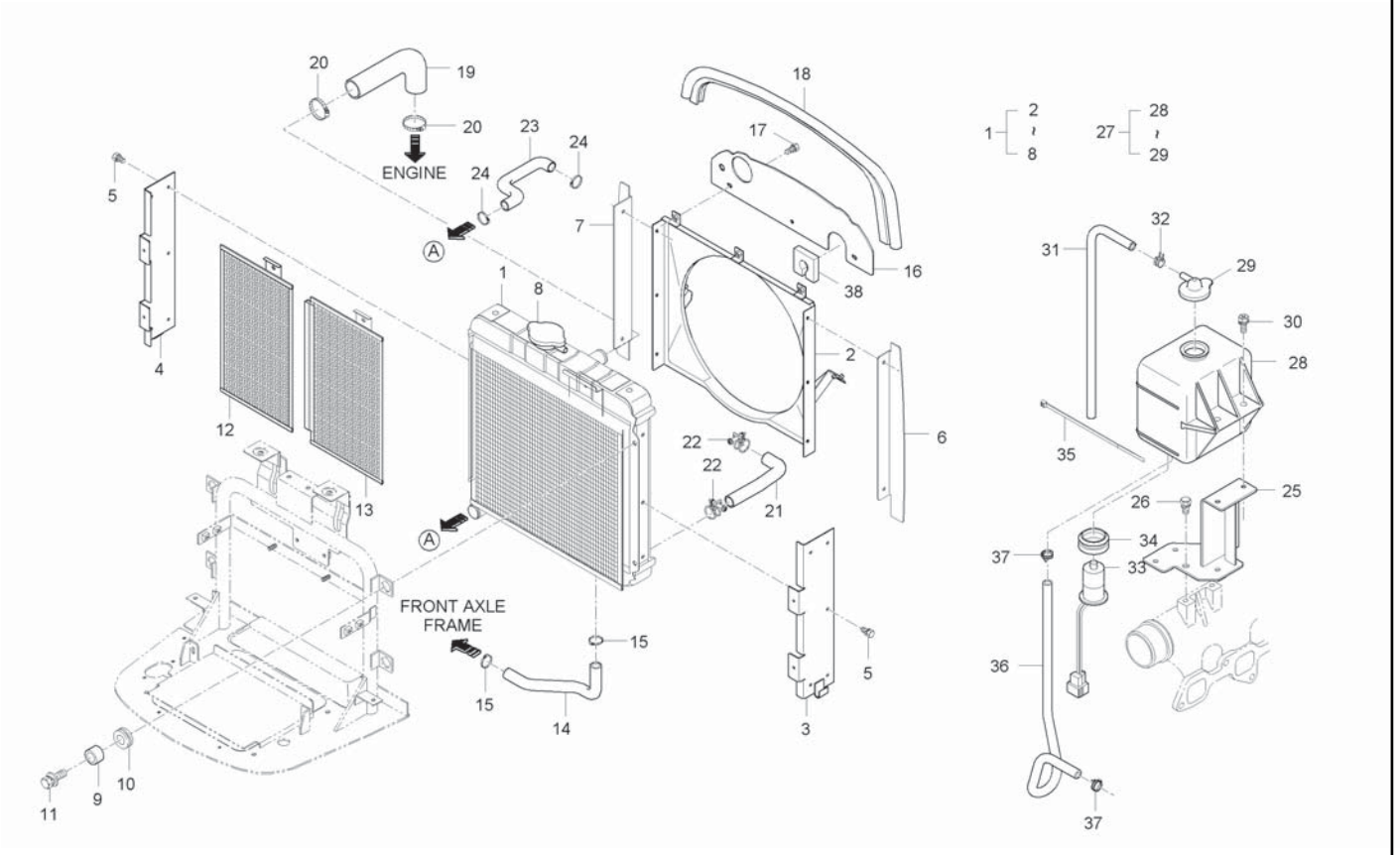

A : CK35-EU , B : CK35H-EU

No.	Part Number	Desciption	Q'TY A	B	C	D	E	I.C	Remark
1	T2185-13502	RADIATOR ASSY	1						
2	T2185-13521	SHROUD	1						
3	T2185-13531	SUPPORT, LH	1						
4	T2185-13541	SUPPORT, RH	1						
5	01023-50614	BOLT, WASHER	10						
6	T2185-13631	PLATE, SUPPORT LH	1						
7	T2185-13641	PLATE, SUPPORT RH	1						
8	E6200-72631	CAP	1						
9	T2350-50421	SPACER, RADIATOR SUPPORT	4						
10	T2350-50431	GROMMET	4						
11	01127-50825	BOLT	4						
12	T2185-13111	NET, 1	1						
13	T2185-13122	NET, 2	1						
14	T2185-13551	HOSE, DRAIN	1						
15	E5700-73361	BAND, HOSE	2						
16	T2185-13561	PLATE	1						
17	01125-50816	BOLT, WASHER	3						
18	T2185-13592	RUBBER, RADIATOR	1						
19	T2185-13571	TUBE, COOLING WATER UPR	1						

----> Old replace New
<-X-> Not interchangeable
<-O-> Interchangeable with another part(s)
<---- New replace Old
<---> Interchangeable

CK30M-T030A

RADIATOR GROUP

(CK35-EU : ~ FT8100016)

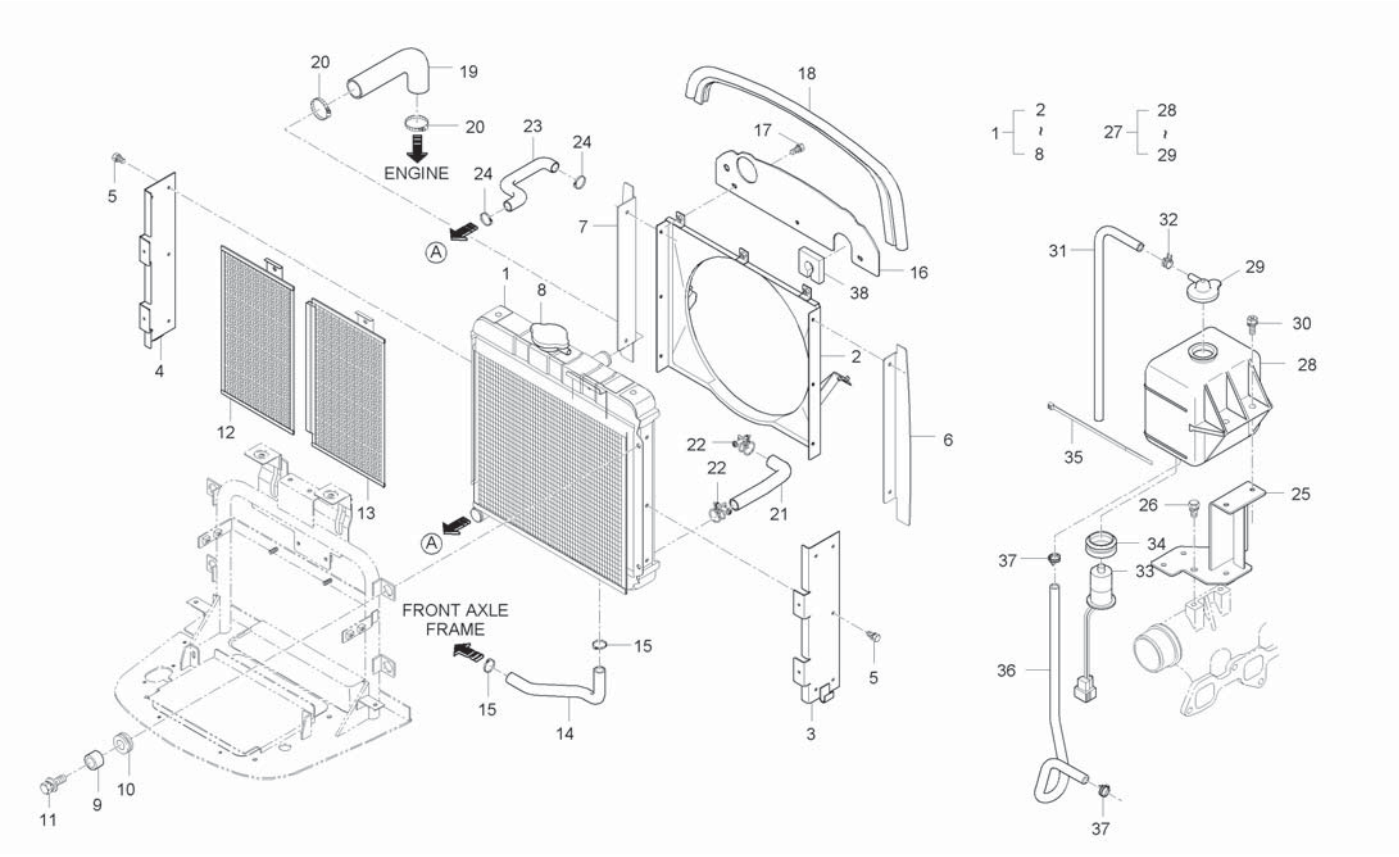

A : CK35-EU , B : CK35H-EU

No.	Part Number	Desciption	Q'TY A	B	C	D	E	I.C	Remark
20	15108-7287-3	BAND	2						
21	T2185-13581	TUBE, COOLING WATER LWR	1						
22	15108-7287-3	BAND	2						
23	T2540-73341	HOSE, WATER RETURN	1						
24	15109-7336-4	BAND, HOSE	2						
25	T2185-72462	HOLDER, WATER TANK	1						
26	01123-50816	BOLT, WASHER	2						
27	T4340-A0110	WATER TANK ASSY	1						
28	E6200-72412	TANK,AUX.	1						
29	15301-7242-0	CAP, WATER TANK	1						
30	01754-50820	FLANGE BOLT	2						
31	15301-7244-0	TUBE, OVER FLOW	1						
32	14911-4275-1	CLIP, TUBE	1						
33	15521-7299-2	SWITCH,WATER	1						
34	15301-7245-0	RUBBER, HOLDER	1						
35	T4520-82561	BAND, CORD	1						
36	E5800-72711	HOSE 1, OVER FLOW	1						
37	15301-7247-0	CLIP, TUBE	2						
38	T2185-13611	SPONGE, RADIATOR	1						

----> Old replace New
<-X-> Not interchangeable
<-O-> Interchangeable with another part(s)
<---- New replace Old
<---> Interchangeable

CK35-T030A

RADIATOR GROUP

(CK35-EU : GT8100001 ~)

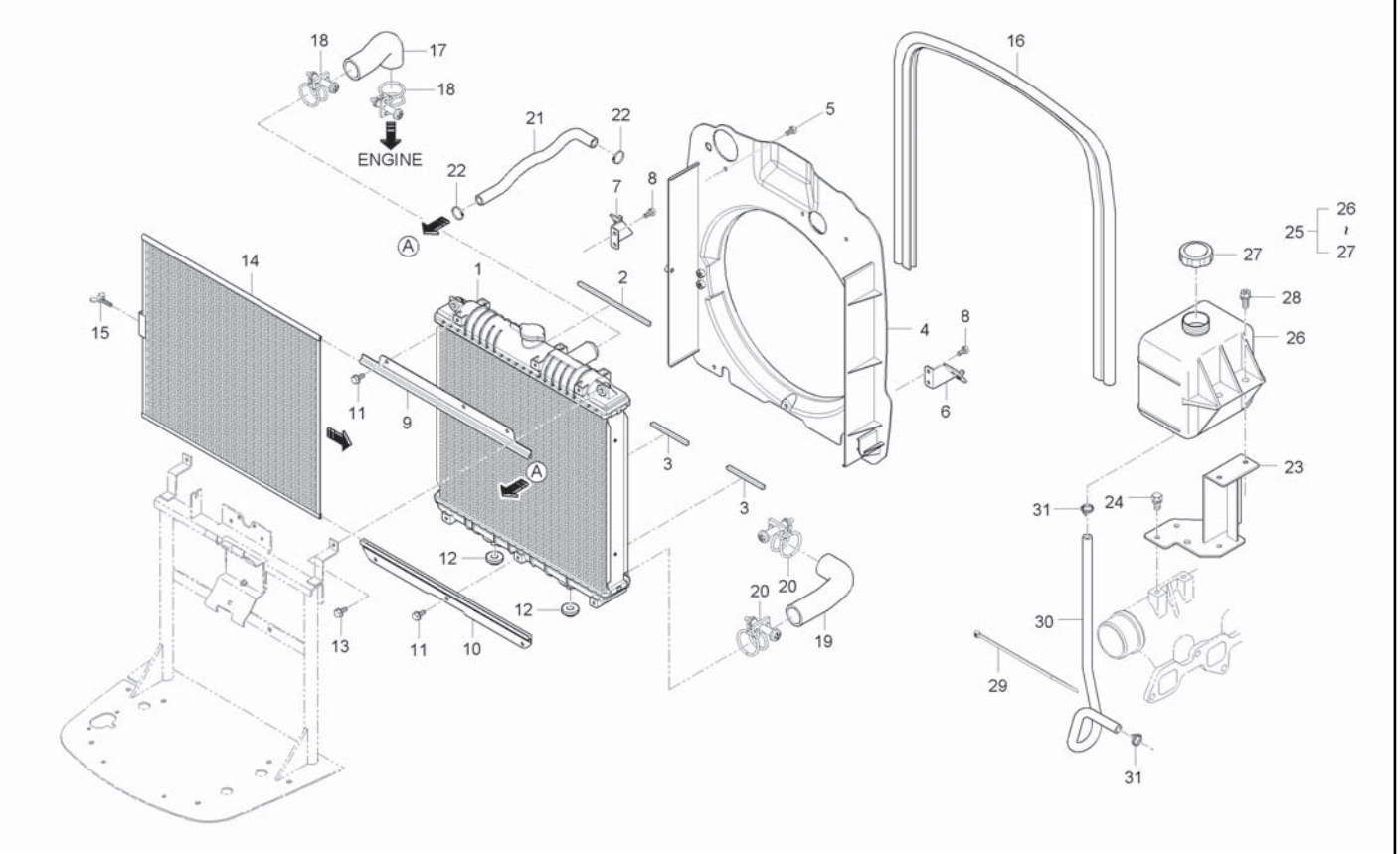

A : CK35-EU , B : CK35H-EU

No.	Part Number	Desciption	Q'TY A	Q'TY B	Q'TY C	Q'TY D	Q'TY E	I.C	Remark
1	T2155-72162	RADIATOR ASSY A, LH	1	1					
2	T2155-13651	SPONGE, 1	1	1					
3	T2155-13661	SPONGE, 2	2	2					
4	T2155-13522	SHROUD	1	1					
4	T2155-13523	SHROUD	1	1				<-X->	
5	T4625-55431	FLANGE BOLT	6	6					
6	T2155-13711	BRAKCET, KNOB LH	1 ~HT8100038	1 ~HT8900076					
6	T2155-13711ED	BRACKET	1 HT8100039~	1 JT8900001~				<-X->	
7	T2155-13721	BRAKCET, KNOB RH	1 ~HT8100038	1 ~HT8900076					
7	T2155-13721ED	BRACKET, HOLDER	1 HT8100039~	1 JT8900001~				<-X->	
8	T4625-55431	FLANGE BOLT	4 ~HT8100038	4 ~HT8900076					
8	T2185-51132BB	GRILL 1, LH	4 HT8100039~	4 JT8900001~				<-X->	
9	T2155-13531	GUIDE, NET UPR	1 ~HT8100038	1 ~HT8900076					
9	T2155-13531ED	GUIDE, WIRE-NET	1 HT8100039~	1 JT8900001~				<-X->	
10	T2155-13541	GUIDE, NET LWR	1 ~HT8100038	1 ~HT8900076					
10	T2155-13541ED	GUIDE, WIRE-NET	1 HT8100039~	1 JT8900001~				<-X->	
11	T4625-55431	FLANGE BOLT	6	6					
12	T4125-13561	CUSHION	2	2					
13	01754-50625	BOLT, FLANGE	2	2					7T

----> Old replace New
<-X-> Not interchangeable
<-O-> Interchangeable with another part(s)
<---- New replace Old
<---> Interchangeable

CK35-T030A

RADIATOR GROUP

(CK35-EU : GT8100001 ~)

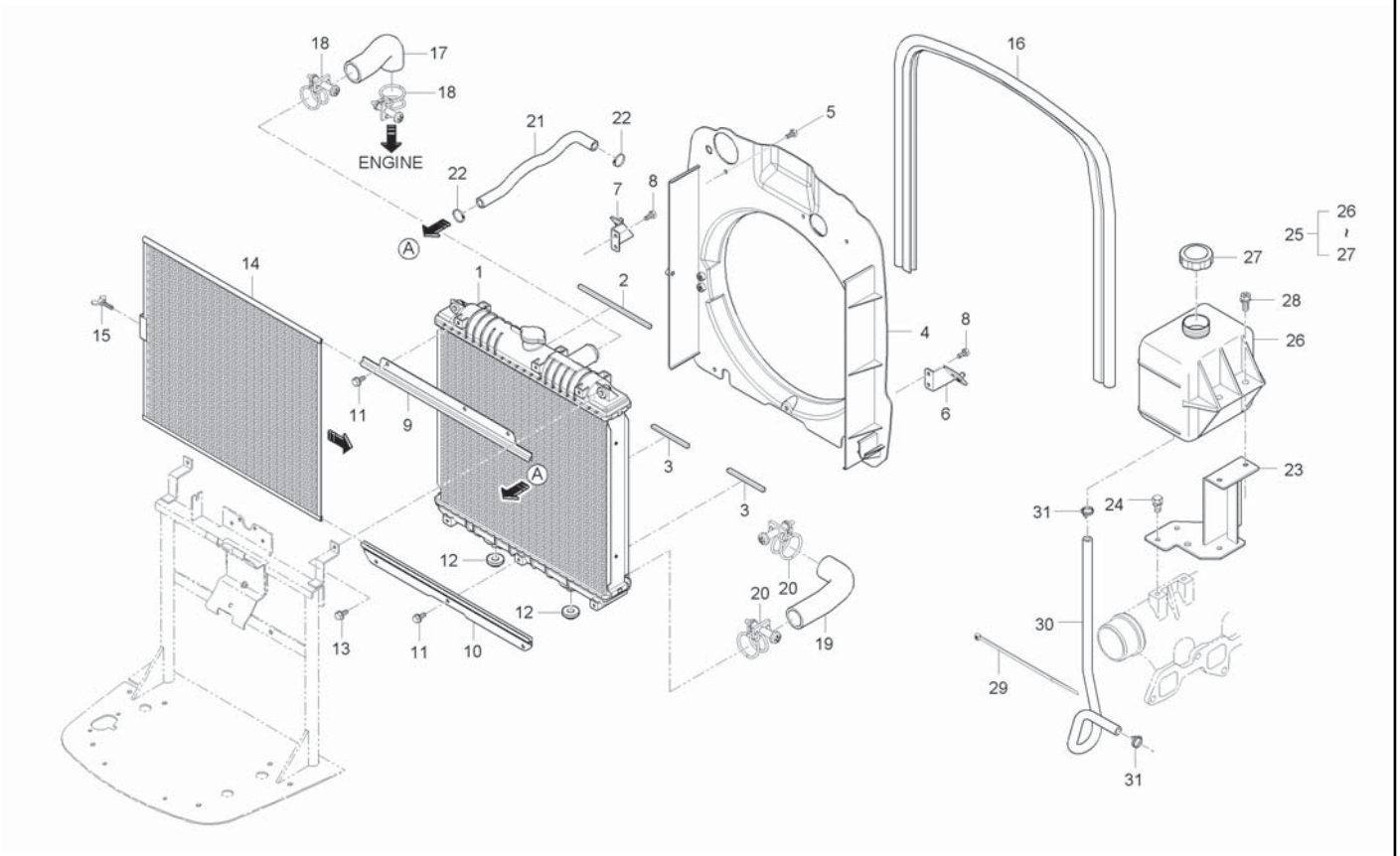

A : CK35-EU , B : CK35H-EU

No.	Part Number	Desciption	Q'TY A	Q'TY B	Q'TY C	Q'TY D	Q'TY E	I.C	Remark
14	T2155-13111	NET	1 ~HT8100038	1 ~HT8900076					
14	T2155-13111ED	WIRE-NET, RADIATOR	1 HT8100039~	1 JT8900001~				<-X->	
15	01811-50612	BOLT, WING	1	1					M6P1.0
16	T2155-13591	RUBBER, RADIATOR	1	1					
17	T2155-13571	HOSE, COOLING WATER UPR	1 ~HT8100038	1 ~HT8900076					
17	T2155-13581	HOSE, COOLING WATER LWR	1 HT8100039~	1 JT8900001~				<-0->	
18	15108-7287-3	BAND	2	2					
18	09318-89045	CLMAP, HOSE	2	2				<--->	철사46#
18	09318-89048	CLIP, HOSE	2	2				<--->	철사#48
19	T2155-13581	HOSE, COOLING WATER LWR	1	1					
20	15108-7287-3	BAND	2	2					
20	09318-89045	CLMAP, HOSE	2	2				<--->	철사46#
20	09318-89048	CLIP, HOSE	2	2				<--->	철사#48
21	T2155-73341	HOSE, COOLING WATER AUTO RETURN	1	1					
22	T4340-38241	BAND, HOSE	2 ~HT8100044	2 ~HT8900076					
22	66204-3623-1	BAND, HOSE	2 JT8100001~	2 JT8900001~				<-0->	
23	T2185-72462	HOLDER, WATER TANK	1 ~HT8100038	1 ~HT8900076					
23	T2185-72462ED	HOLDER, TANK	1 HT8100039~	1 JT8900001~				<-X->	
24	01123-50816	BOLT, WASHER	2	2					M8*P1.25

----> Old replace New
<-X-> Not interchangeable
<-0-> Interchangeable with another part(s)
<---- New replace Old
<---> Interchangeable

CK35-T030A

RADIATOR GROUP

(CK35-EU : GT8100001 ~)

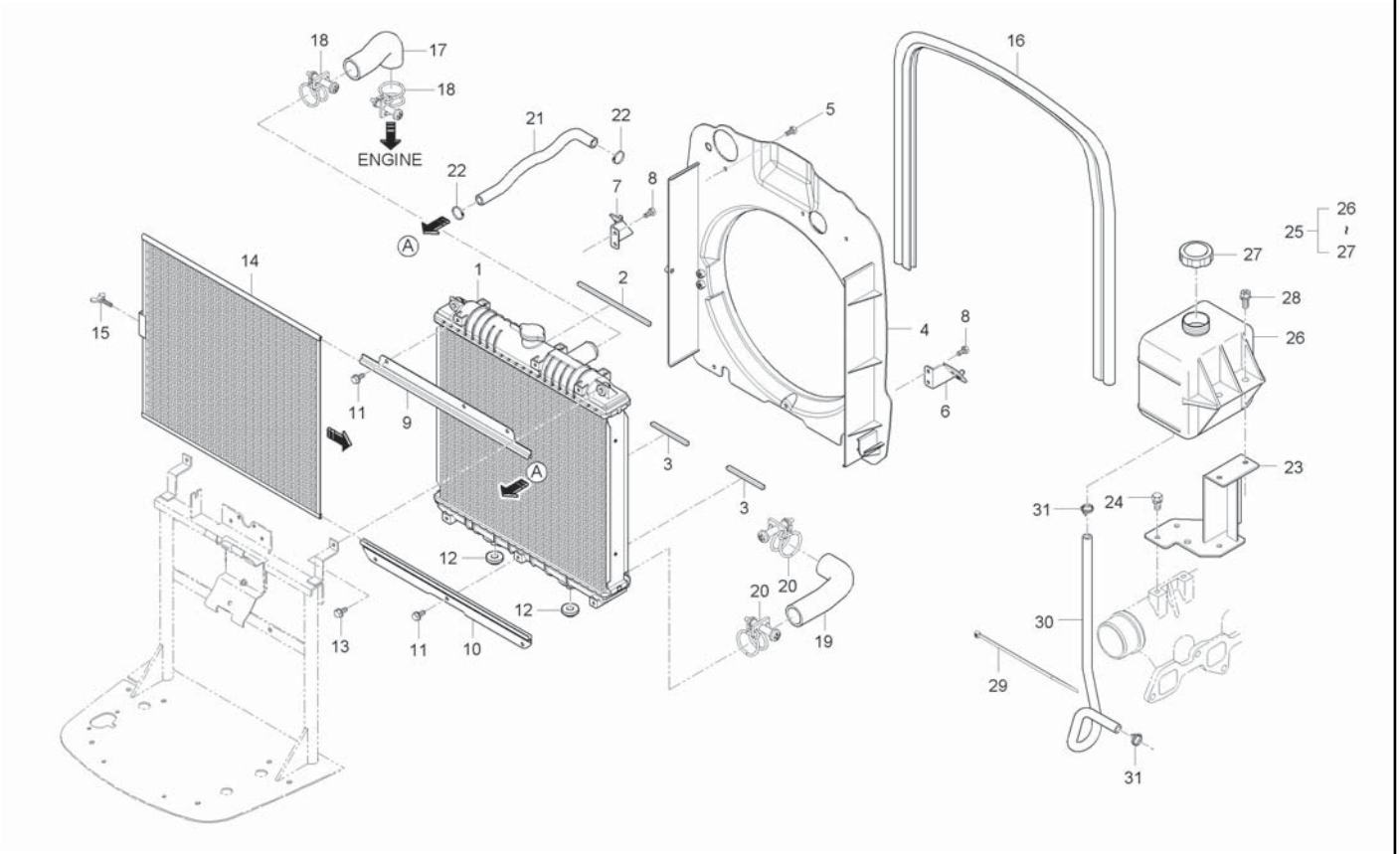

A : CK35-EU , B : CK35H-EU

No.	Part Number	Desciption	Q'TY A	Q'TY B	Q'TY C	Q'TY D	Q'TY E	I.C	Remark
25	T4710-72412	WATER TANK ASSY	1	1					
25	T4710-72413	WATER TANK ASSY	1 ~HT8100044	1 ~HT8900076				<----	
25	T4710-72414	TANK ASS`Y, RESERVE	1 JT8100001~	1 JT8900001~				<--->	
26	T4710-72432	WATER TANK	1	1					
26	T4710-72433	WATER TANK	1 ~HT8100044	1 ~HT8900076				<----	
26	T4710-72434	ASSY, TANK WATER	1 JT8100001~	1 JT8900001~				<--->	
27	E7100-72411	ASSY CAP	1	1					
28	01754-50820	FLANGE BOLT	2	2					M8*P1.25
29	T4520-82561	BAND, CORD	1	1					
29	T2185-82561	BAND,CORD	1	1				<--->	
30	E5800-72711	HOSE 1, OVER FLOW	1	1					
30	E6200-72711	HOSE 1, OVER FLOW	1	1				<-X->	
31	15301-7247-0	CLIP, TUBE	2	2					

----> Old replace New
<-X-> Not interchangeable
<-O-> Interchangeable with another part(s)
<---- New replace Old
<---> Interchangeable

CK30H-T120A

CLUTCH PEDAL GROUP

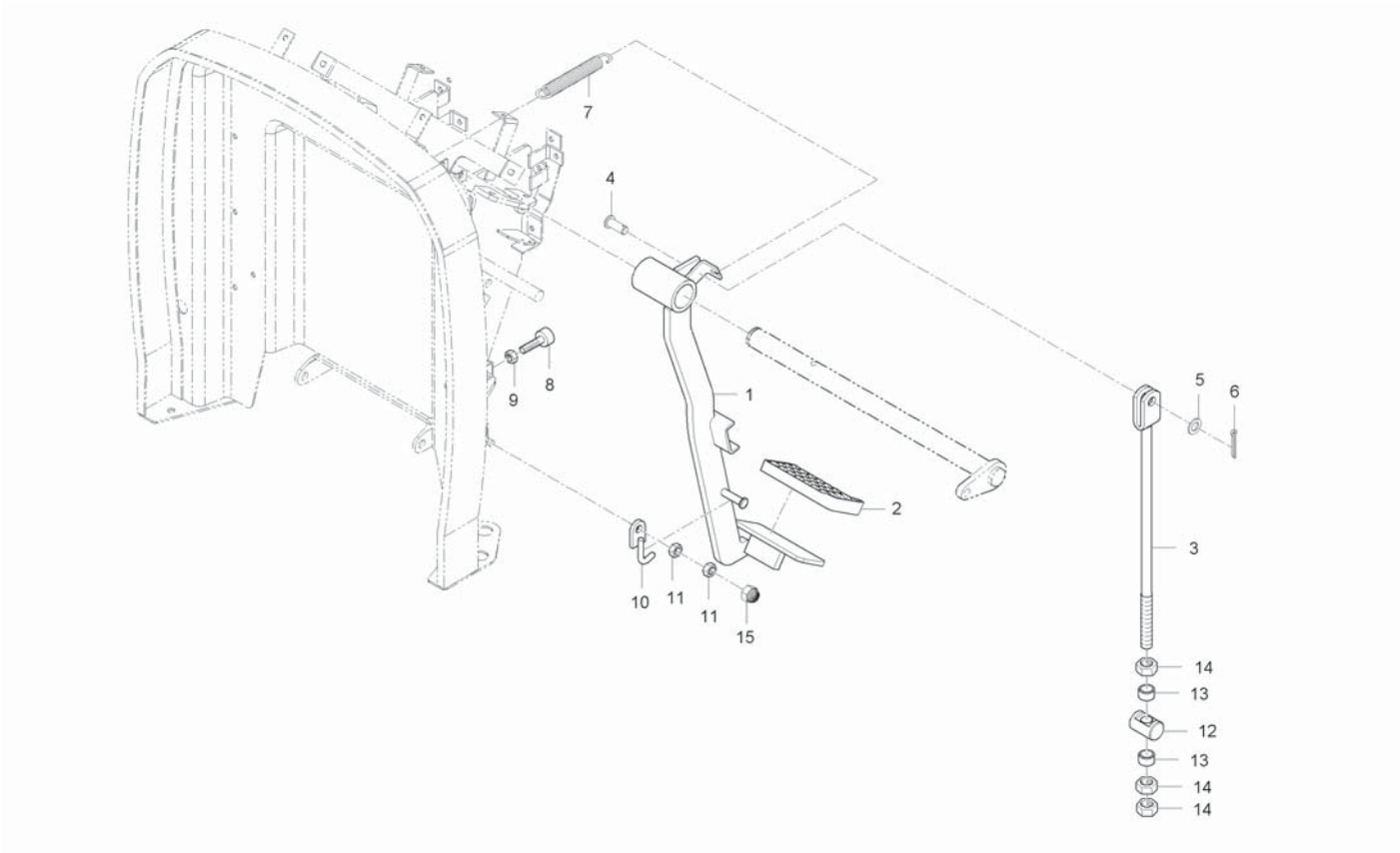

A : CK35-EU , B : CK35H-EU

No.	Part Number	Desciption	Q'TY A	Q'TY B	Q'TY C	Q'TY D	Q'TY E	I.C	Remark
1	T2195-55512	PEDAL, CLUTCH		1 ~HT8900076					
1	T2195-55512BB	PEDAL, CLUTCH		1 JT8900001~				<-X->	
2	T2670-55531	COVER, PEDAL		1					
3	T2195-55521	ROD, CLUTCH		1					
4	05122-51025	JOINT PIN		1					DIA10*25
5	04013-50100	WASHER, PLAIN		1					M10
6	05511-50318	PIN, SPLIT		1					
7	T2350-55961	SPRING, BRAKE		1					
8	T2350-55881	BOLT, ADJUSTING		1					
9	02114-50080	NUT		1					M8*P1.25
10	T2350-55871	HOOK, CLUTCH		1					
11	02114-50080	NUT		2					M8*P1.25
12	T2350-55531	PIN, CLUTCH ROD		1					
13	T2350-55541	SPACER, CLUTCH ROD SUPPORT		2					
14	02172-50120	NUT		3					
15	T4815-93211	NUT		1					

----> Old replace New
<-X-> Not interchangeable
<-O-> Interchangeable with another part(s)
<---- New replace Old
<---> Interchangeable

CK30M-T120A

CLUTCH PEDAL GROUP

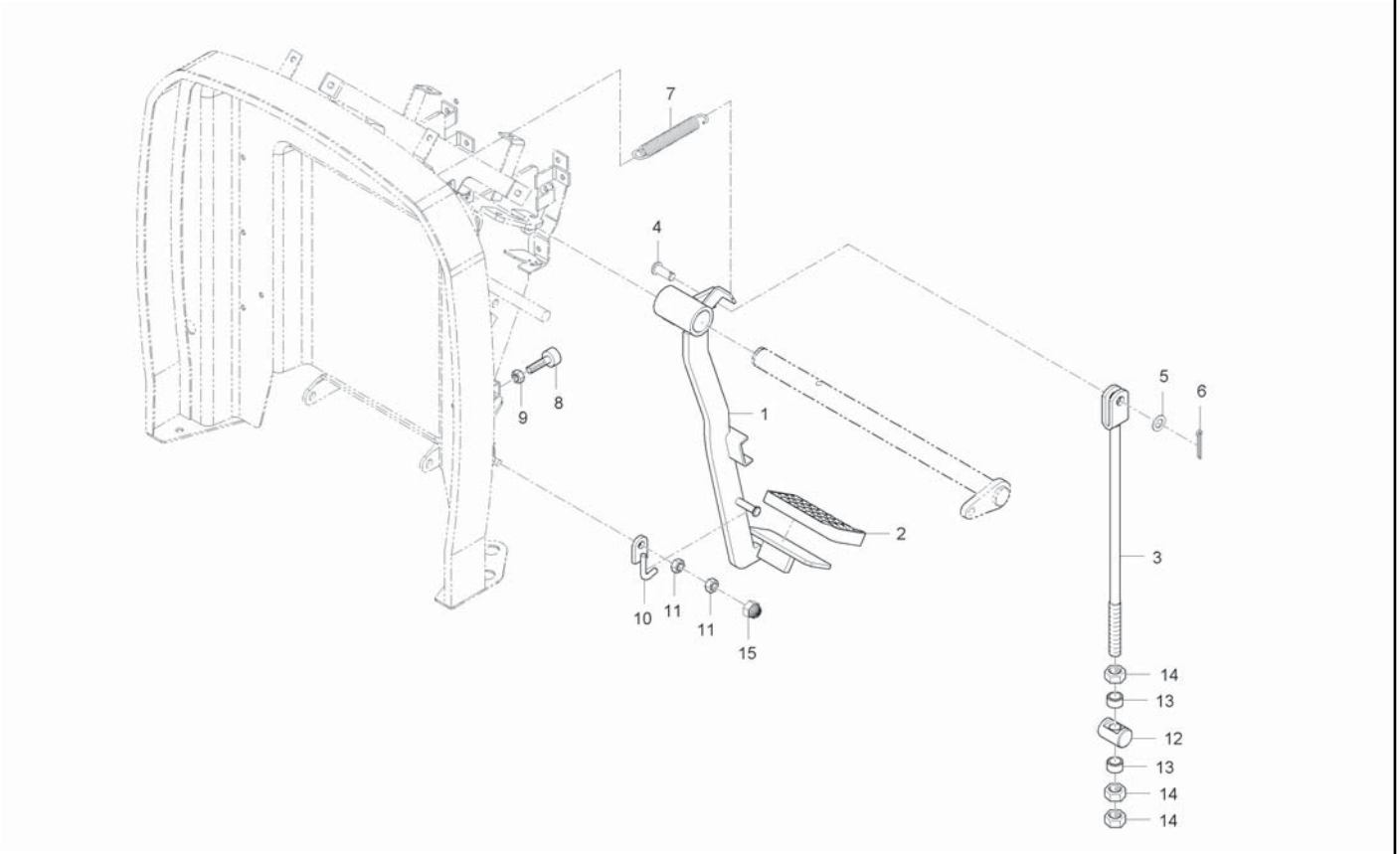

A : CK35-EU , B : CK35H-EU

No.	Part Number	Desciption	Q'TY A	Q'TY B	Q'TY C	Q'TY D	Q'TY E	I.C	Remark
1	T2185-55513	PEDAL, CLUTCH	1 ~GT8100014						
1	T2185-55514	PEDAL, CLUTCH	1 GT8100015~					<-X->	
2	T2670-55531	COVER, PEDAL	1						
3	T2195-55521	ROD, CLUTCH	1						
4	05122-51025	JOINT PIN	1						
5	04013-50100	WASHER, PLAIN	1						
6	05511-50318	PIN, SPLIT	1						
7	T2350-55961	SPRING, BRAKE	1						
8	T2350-55881	BOLT, ADJUSTING	1						
9	02114-50080	NUT	1						
10	T2350-55871	HOOK, CLUTCH	1						
11	02114-50080	NUT	2						
12	T2350-55531	PIN, CLUTCH ROD	1						
13	T2350-55541	SPACER, CLUTCH ROD SUPPORT	2						
14	02172-50120	NUT	2						
15	T4815-93211	NUT	1						

----> Old replace New
<-X-> Not interchangeable
<-O-> Interchangeable with another part(s)
<---- New replace Old
<---> Interchangeable

CK30ME-T300A

SHUTTLE LEVER GROUP

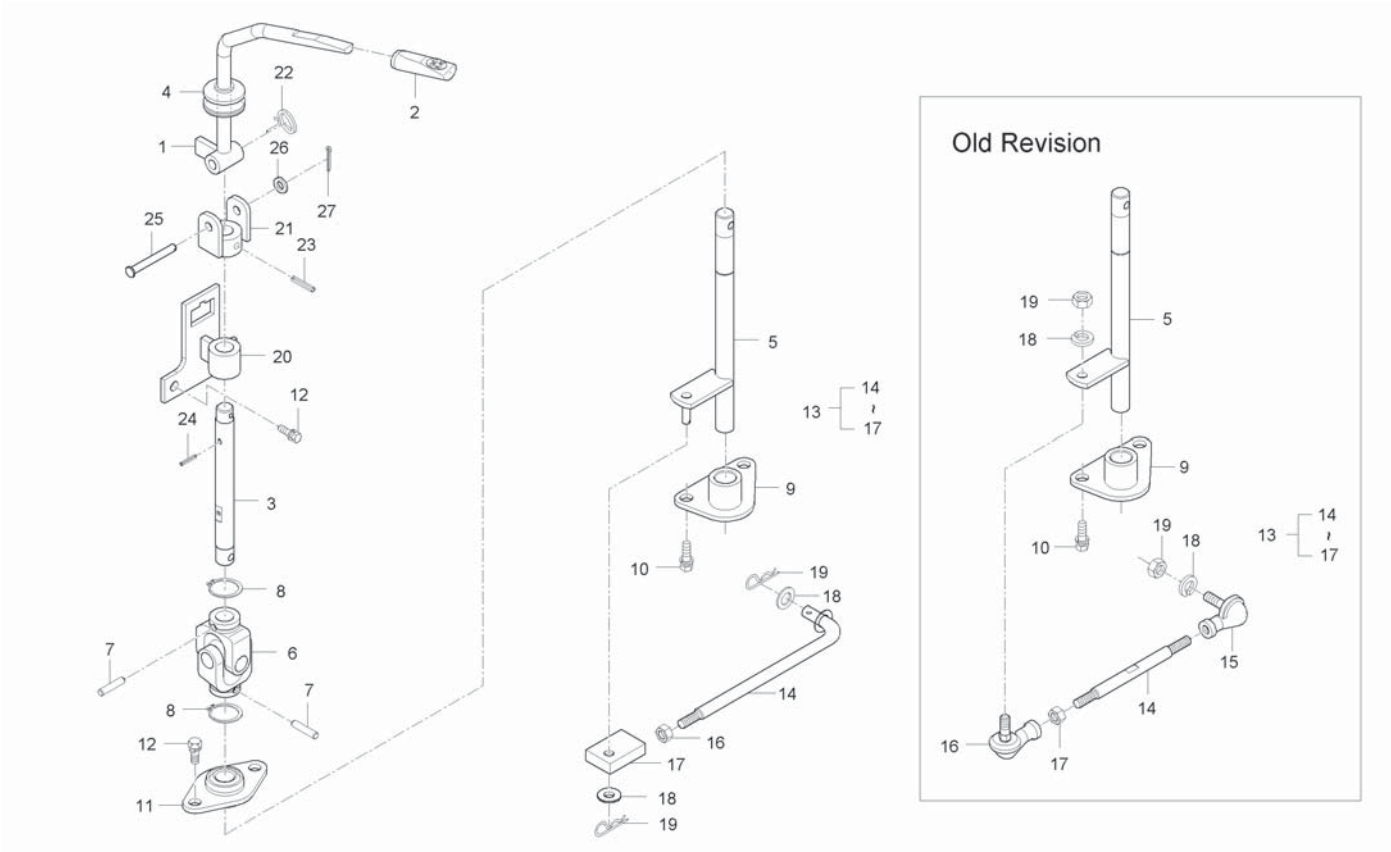

A : CK35-EU , B : CK35H-EU

No.	Part Number	Desciption	Q'TY A	Q'TY B	Q'TY C	Q'TY D	Q'TY E	I.C	Remark
1	T2185-65606	LEVER, SHUTTLE	1						
2	T2615-65712	GRIP, SHUTTLE LEVER	1						
3	T2185-65613	SHAFT 1, SHUTTLE	1						
4	T4625-65571	JABARA	1						
5	T2185-65623	SHAFT, 2	1 ~GT8100044						
5	T2185-65624	SHAFT, 2	1 GT8100045~					<-X->	
6	P4510-41301	UNIVERSAL JOINT ASSY	1						
7	66116-4135-3	PIN, PARALLEL	2						
8	04612-00280	SNAP RING	2						
9	T2185-65633	SUPPORT, SHUTTLE	1 ~GT8100044						
9	T2185-65634	SUPPORT, SHUTTLE	1 GT8100045~					<-X->	
10	01123-51020	BOLT, WASHER	2						
11	T2185-65641	FLANGE, BEARING	1						
12	01123-50820	BOLT, WASHER	4						
13	T2185-65651	ROD, SHUTTLE	1 ~GT8100044						
13	T2185-65581	ROD	1 GT8100045~					<-X->	
14	T2185-65651001	ROD	1 ~GT8100044						
14	T2185-65581001	PLATE 33	1 GT8100045~					<-X->	
15	K2400-22521	BALL JOINT, LH	1						

----> Old replace New
<-X-> Not interchangeable
<-O-> Interchangeable with another part(s)
<---- New replace Old
<---> Interchangeable

CK30ME-T300A

SHUTTLE LEVER GROUP

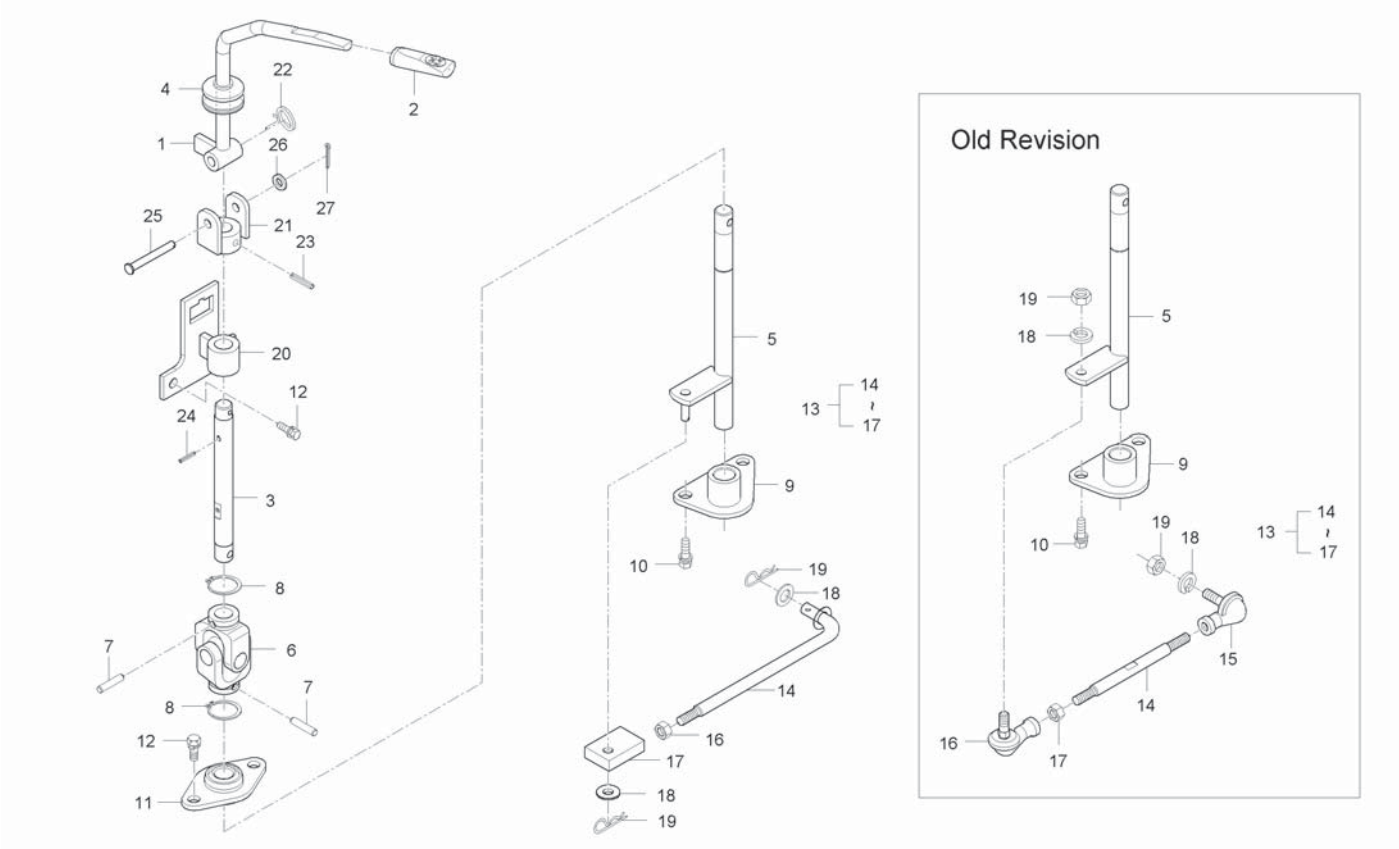

A : CK35-EU , B : CK35H-EU

No.	Part Number	Desciption	Q'TY A	Q'TY B	Q'TY C	Q'TY D	Q'TY E	I.C	Remark
16	K2400-22541	BALL JOINT, RH	1 ~GT8100044						
16	02056-50060	NUT	1 GT8100045~					<-X->	
17	02112-50080	NUT	1 ~GT8100044						
17	T4125-33161002	PLATE 1	1 GT8100045~					<-X->	
18	04512-50080	SPRING WASHER	2 ~GT8100044						
18	04013-50080	WASHER	2 GT8100045~					<-X->	
19	02114-50080	NUT	2 ~GT8100044						
19	05525-50800	PIN, SNAP	2 GT8100045~					<-X->	
20	T2185-65662	BRACKET 1, SHUTTLE	1						
21	T4710-65141	BRACKET, SHUTTLE 2	1						
22	T2185-65672	SPRING	1						
23	05411-00630	PIN, SPRING	1						
24	05411-00425	PIN, SPRING	1						
25	05112-50845	JOINT PIN	1						
26	04013-50080	WASHER	1						
27	05511-50218	PIN, SPLIT	1						

----> Old replace New
<-X-> Not interchangeable
<-O-> Interchangeable with another part(s)
<---- New replace Old
<---> Interchangeable

CK30M-T320A

MAIN SHIFT LEVER GROUP

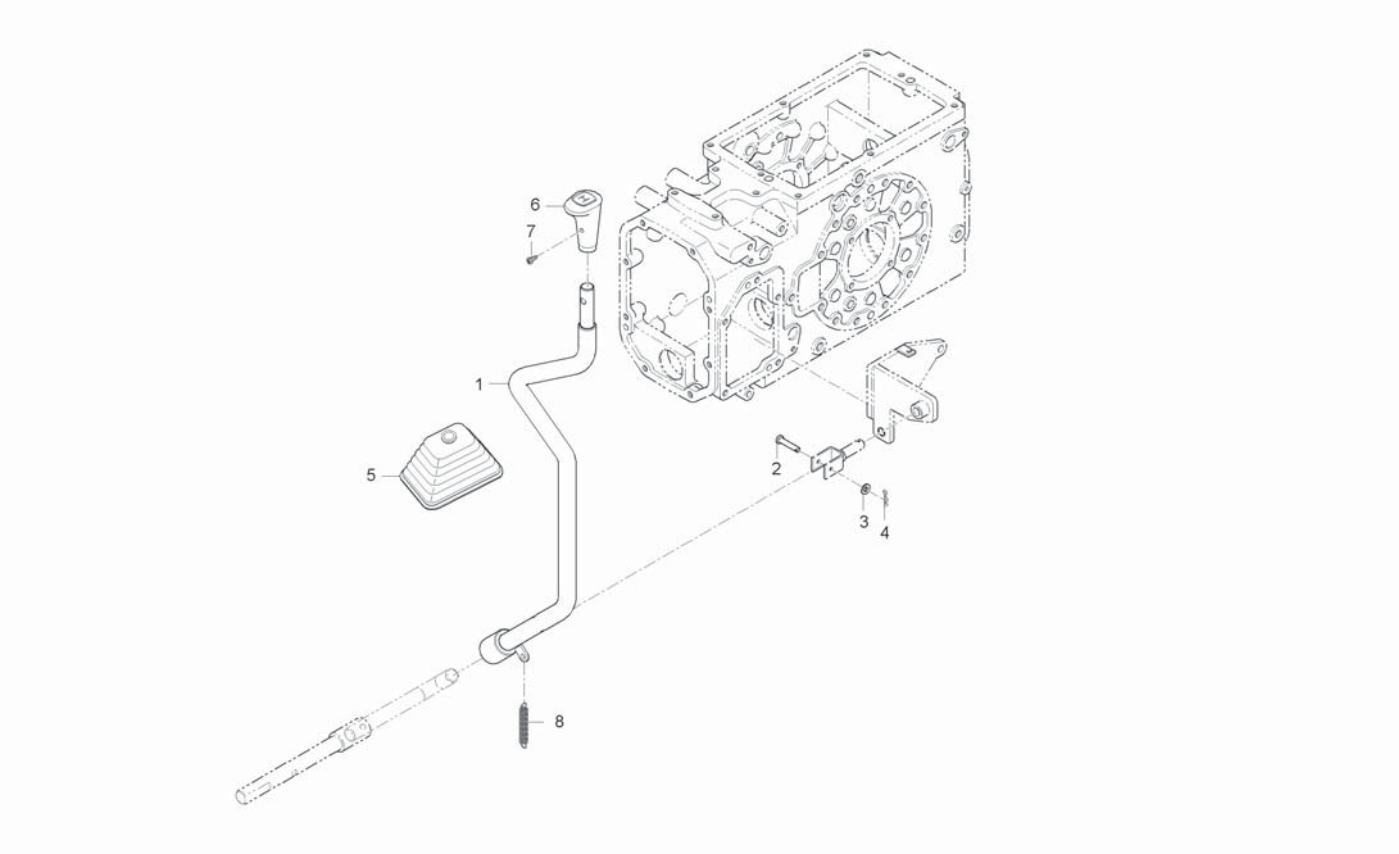

A : CK35-EU , B : CK35H-EU

No.	Part Number	Desciption	Q'TY A	Q'TY B	Q'TY C	Q'TY D	Q'TY E	I.C	Remark
1	T2181-21312	LEVER, MAIN SHIFT	1						
2	05122-50635	JOINT PIN	1						
3	04013-50060	WASHER, PLAIN	1						
4	05525-50600	PIN, SNAP	1						
5	T2185-60372	JABALA, MAIN SHIFT	1						
6	T2610-66441	GRIP, TRANSMISSION	1						
6	T4115-66441	GRIP	1					<----	
7	03024-50516	SCREW, WASHER	1						
7	03004-50616	SCREW, WASHER	1					<----	
8	T4520-27831	SPRING	1						

----> Old replace New
<-X-> Not interchangeable
<-O-> Interchangeable with another part(s)
<---- New replace Old
<---> Interchangeable

CK30H-T340A

AUX SPEED SHIFT LEVER GROUP

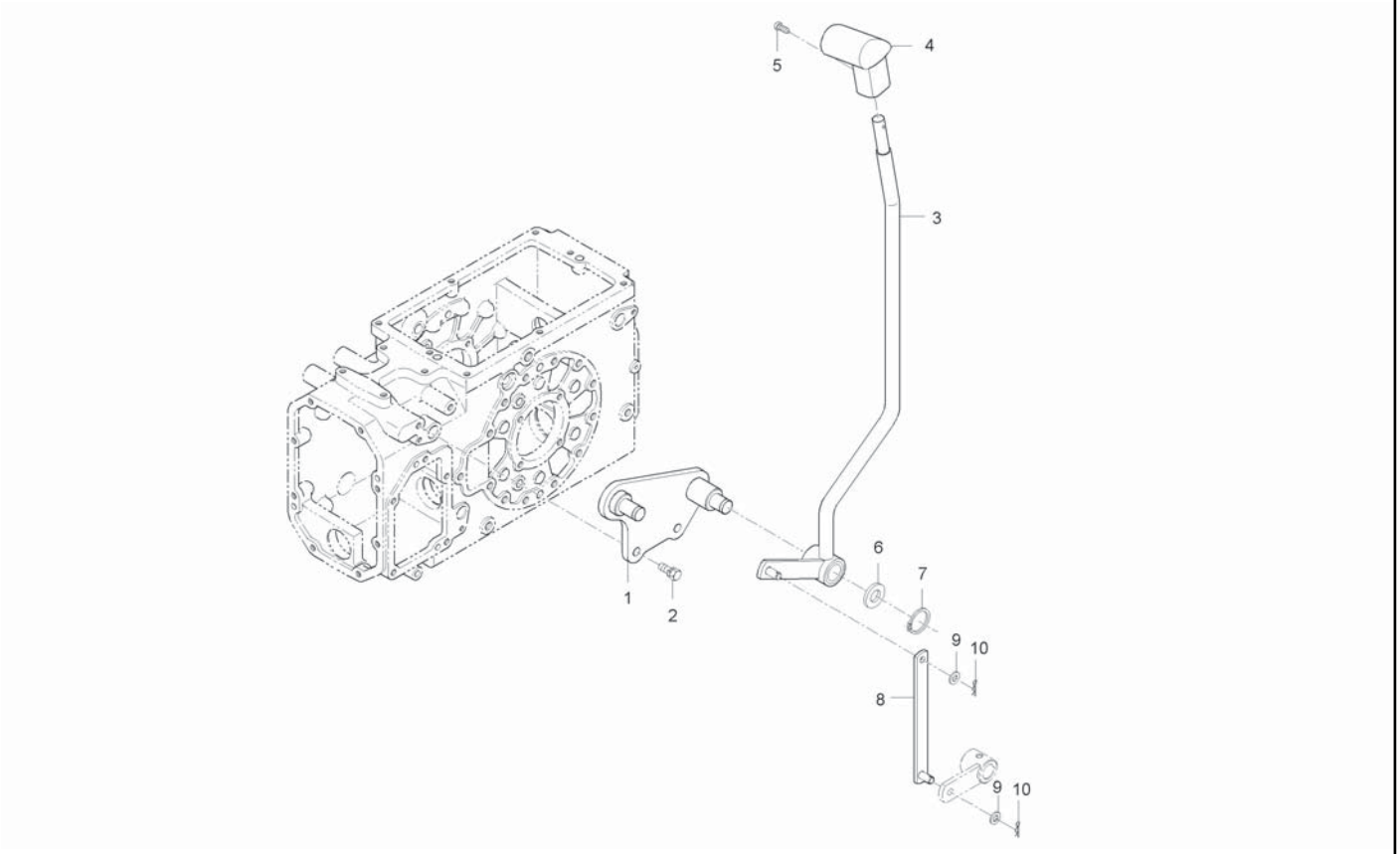

A : CK35-EU , B : CK35H-EU

No.	Part Number	Desciption	Q'TY A	Q'TY B	Q'TY C	Q'TY D	Q'TY E	I.C	Remark
1	T2185-60415	BRACKET, SUBMISSION		1					
1	T2185-60416	BRACKET, SUBMISSION		1				<----	
2	01133-51225	BOLT, WASHER		2					M12*P1.25
3	T2195-60431	LEVER, SUBMISSION		1 ~HT8900076					
3	T2195-60431BB	LEVER, SUBMISSION		1 JT8900001~				<-X->	
4	T2350-60442	GRIP, SUBMISSION		1					
4	T2368-60441	GRIP		1				<----	
5	03024-50514	SCREW, WASHER		1					
6	04011-50180	WASHER, PLAIN		1					T2.9
7	04612-00180	SNAP RING		1					
8	T2195-60425	ROD, SUB SHIFT		1					
8	T2195-60425BB	ROD, SUB SHIFT		1				<-X->	
9	04013-50080	WASHER		2					M8
10	05525-50800	PIN, SNAP		2					

----> Old replace New
<-X-> Not interchangeable
<-O-> Interchangeable with another part(s)
<---- New replace Old
<---> Interchangeable

CK30M-T340A

AUX SPEED SHIFT LEVER GROUP

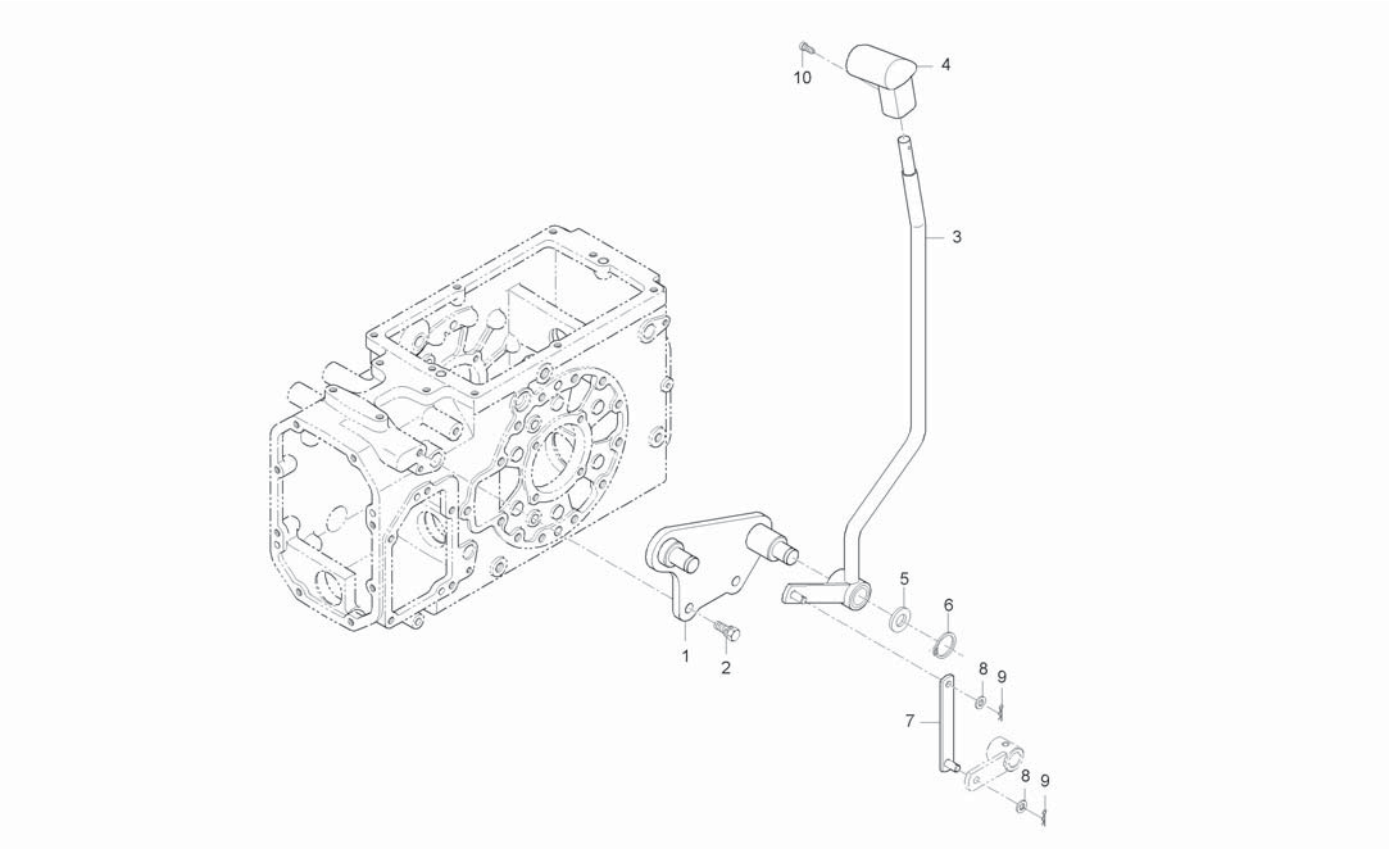

A : CK35-EU , B : CK35H-EU

No.	Part Number	Desciption	Q'TY A	B	C	D	E	I.C	Remark
1	T2185-60414	BRAKET, HI-LO	1						
1	T2185-60415	BRACKET, SUBMISSION	1					<----	
1	T2185-60416	BRACKET, SUBMISSION	1					<----	
2	01133-51225	BOLT, WASHER	2						
3	T2185-60434	LEVER, SUBMISSION	1						
3	T2185-60435	LEVER, SUBMISSION	1					<----	
4	T2350-60442	GRIP, SUBMISSION	1						
4	T2368-60441	GRIP	1					<----	
5	04011-50180	WASHER, PLAIN	1						
6	04612-00180	SNAP RING	1						
7	T2185-60422	ROD, SUB SHIFT	1						
8	04013-50080	WASHER	2						
9	05525-50800	PIN, SNAP	2						
10	03024-50514	SCREW, WASHER	1						

----> Old replace New
<-X-> Not interchangeable
<-O-> Interchangeable with another part(s)
<---- New replace Old
<---> Interchangeable

CK30HEU-T345B **1**

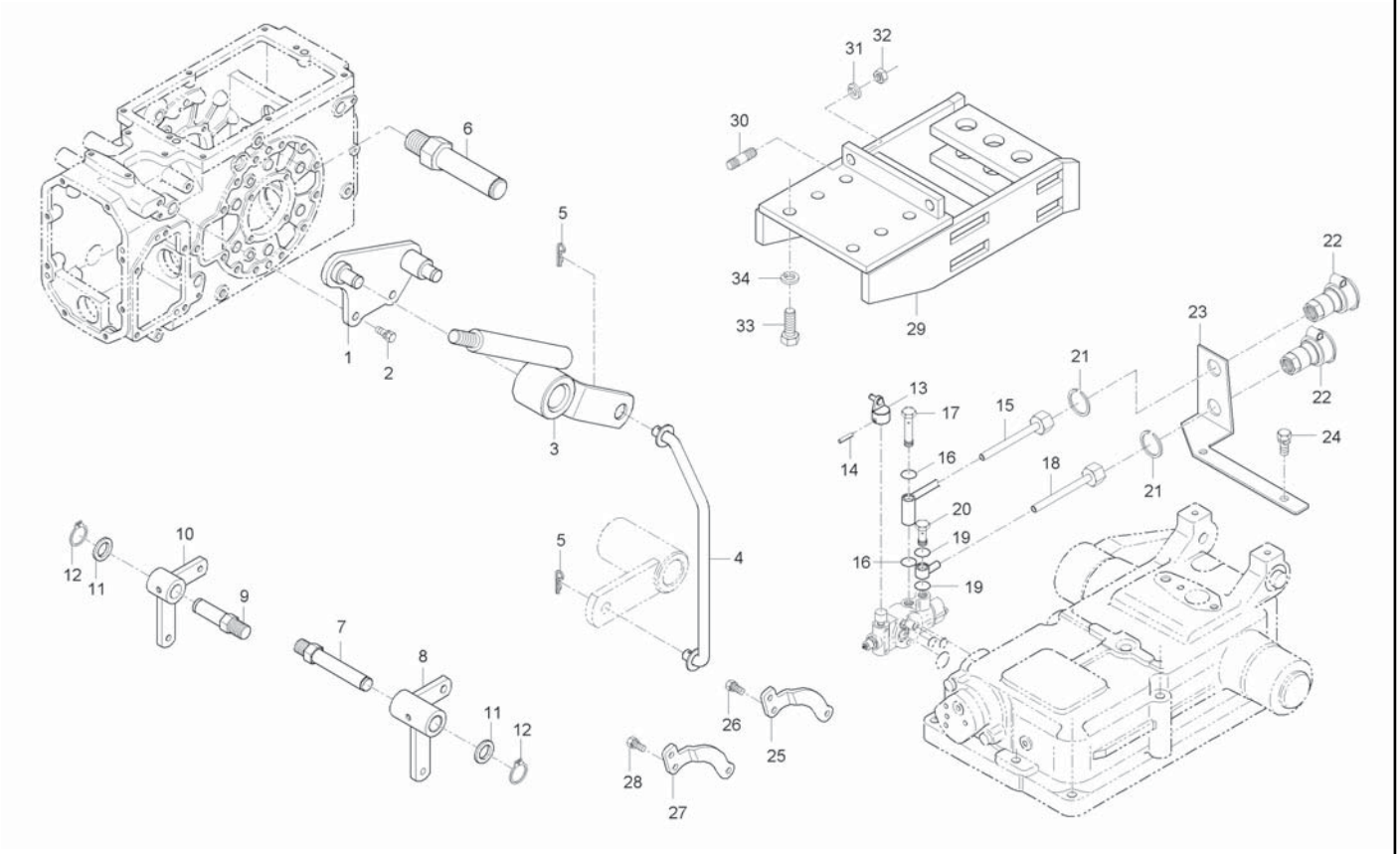

A : CK35-EU , B : CK35H-EU

No.	Part Number	Desciption	Q'TY A	Q'TY B	Q'TY C	Q'TY D	Q'TY E	I.C	Remark
1	T2185-60416	BRACKET, SUBMISSION		1					
2	01133-51225	BOLT, WASHER		2					M12*P1.25
3	T2185-44365BB	LEVER, FWD		1					
4	T2195-44341	ROD, 4WD		1					
5	05525-51000	PIN, SNAP		2					
6	T2185-24283	SHAFT, PTO		1					
7	T2185-55802	SHAFT BRAKE, LH		1					
8	T2185-55782	LEVER ,BRAKE		1					
9	T2185-55812	SHAFT BRAKE, RH		1					
10	T2185-55793	LEVER ,BRAKE		1					
11	04011-50200	WASHER, PLAIN		2					
12	04612-00200	RING, SNAP		2					DIA20
13	T2155-68491	LEVER1(DOUBLE)		1					
14	T2610-39572	SCREW, HOLDER		1					
15	T2155-90011	TUBE A, HYD		1					
16	04810-00200	O RING		2					
17	T4520-37372	BOLT 2, JOINT		1					
18	T2155-90021	TUBE B, HYD		1					
19	04810-00200	O RING		2					

----> Old replace New
<-X-> Not interchangeable
<-O-> Interchangeable with another part(s)
<---- New replace Old
<---> Interchangeable

CK30HEU-T345B **1**

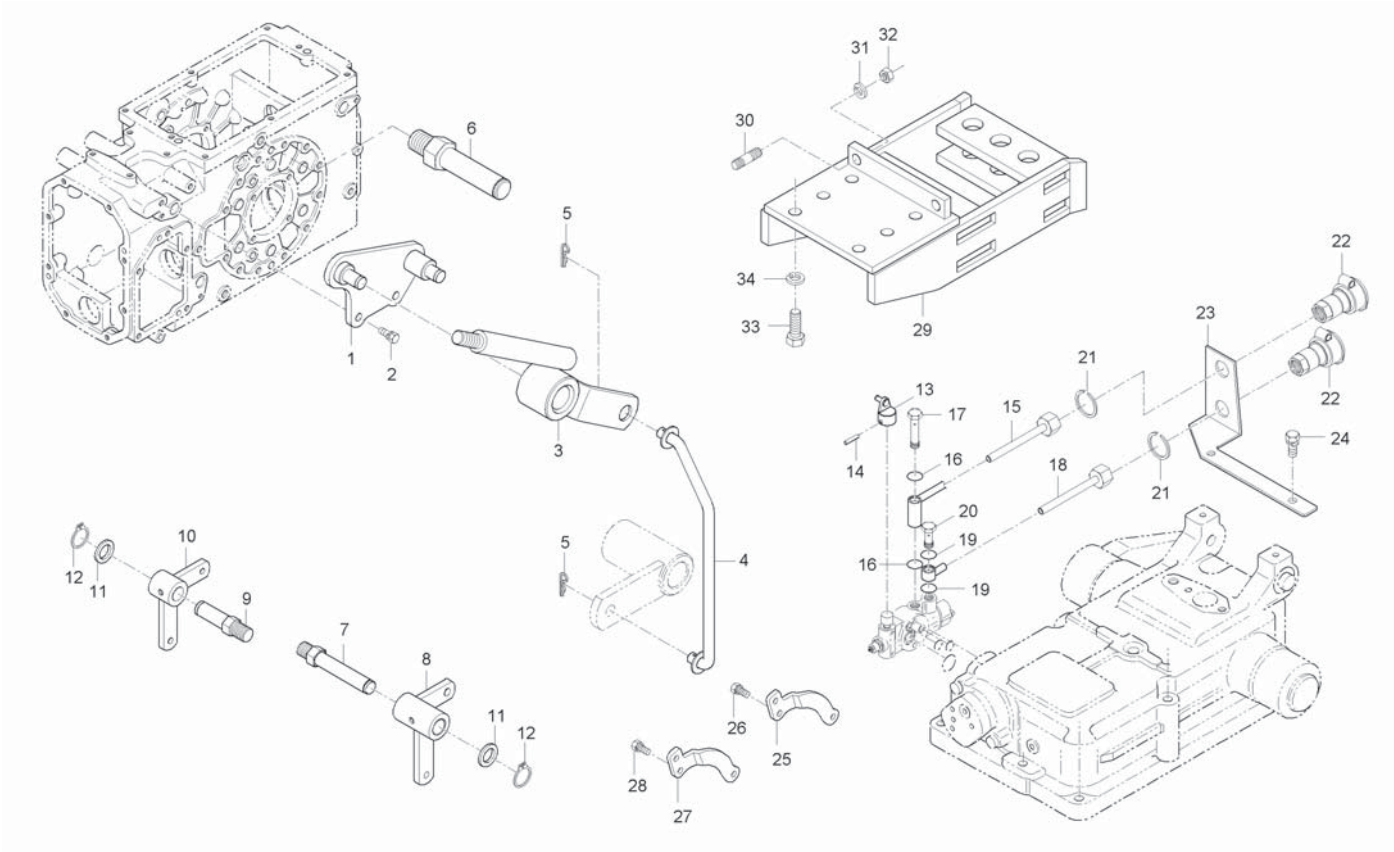

A : CK35-EU , B : CK35H-EU

No.	Part Number	Desciption	Q'TY A	Q'TY B	Q'TY C	Q'TY D	Q'TY E	I.C	Remark
20	T4520-90042	BOLT,JOINT		1					
21	04612-00220	SNAP RING		2					
22	T4720-90091	COUPLER, 1X2 SOCKET		1					
23	T2181-90072ED	SUPPORT, MUFFLER		1					
24	01133-51018	BOLT, WASHER		2					
25	T2185-65472	LEVER, 2		1					
26	01123-50816	BOLT, WASHER		2					M8*P1.25
27	T2185-65472	LEVER, 2		1					
28	01123-50816	BOLT, WASHER		2					M8*P1.25
29	T2185-29813BB	FRAME, SWING DRAW BAR		1					
30	01574-51230	STUD		2					
31	04512-50120	WASHER, SPRING		2					M12
32	02176-50120	NUT		2					M12*1.25
33	01173-51435	BOLT		6					M14*1.5*35
34	04512-50140	WASHER, SPRING		6					

----> Old replace New
<-X-> Not interchangeable
<-O-> Interchangeable with another part(s)
<---- New replace Old
<---> Interchangeable

CK30MEU-T345B **1**

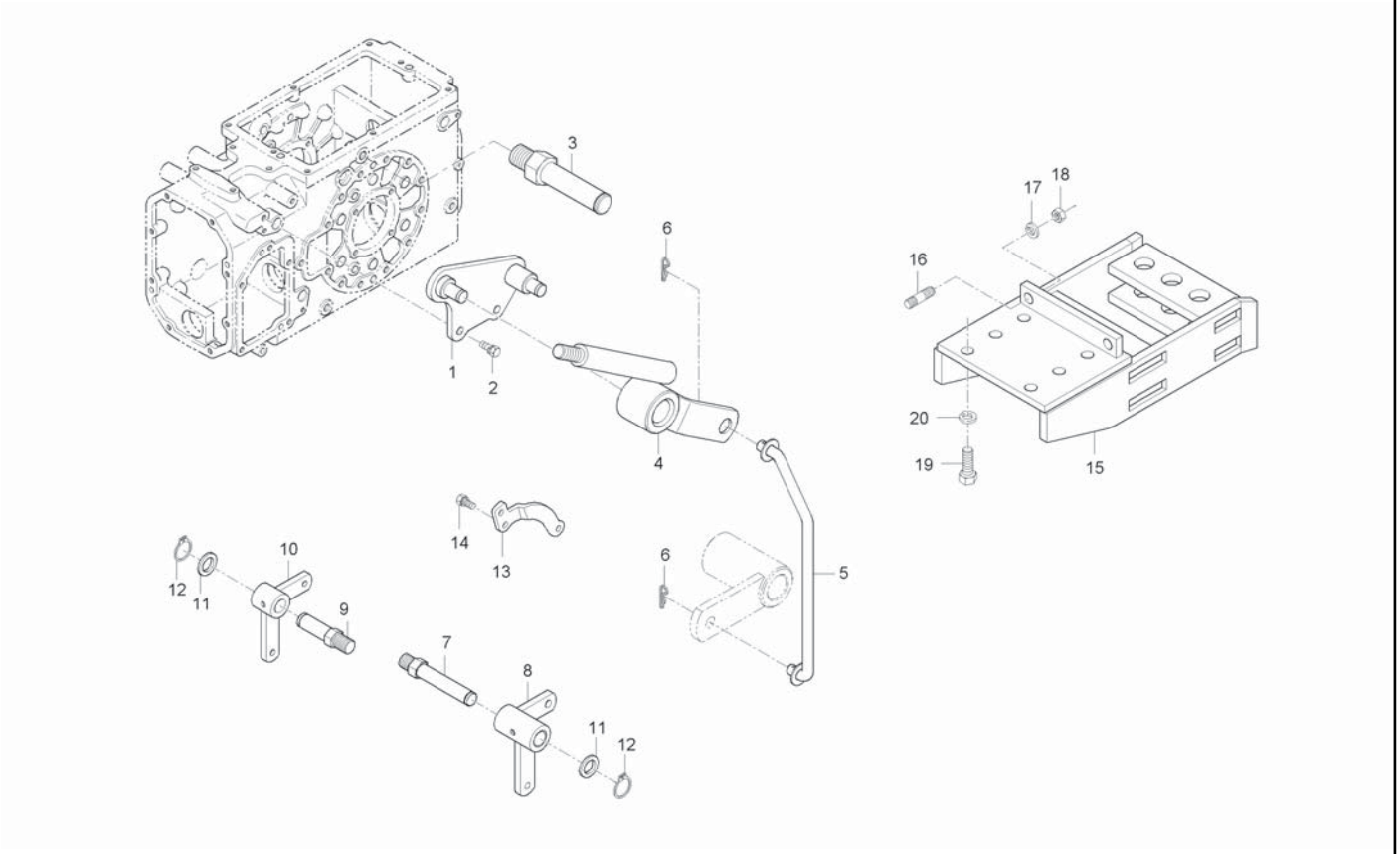

A : CK35-EU , B : CK35H-EU

No.	Part Number	Desciption	Q'TY A	B	C	D	E	I.C	Remark
1	T2185-60416	BRACKET, SUBMISSION	1						
2	01133-51225	BOLT, WASHER	2						
3	T2185-24283	SHAFT, PTO	1						
4	T2185-44365	LEVER, FWD	1						
5	T2195-44341	ROD, 4WD	1						
6	05525-51000	PIN, SNAP	2						
7	T2185-55802	SHAFT BRAKE, LH	1						
8	T2185-55782	LEVER ,BRAKE	1						
9	T2185-55812	SHAFT BRAKE, RH	1						
10	T2185-55793	LEVER ,BRAKE	1						
11	04011-50200	WASHER, PLAIN	2						
12	04612-00200	RING, SNAP	2						
13	T2185-65472	LEVER, 2	1						
14	01123-50816	BOLT, WASHER	2						
15	T2185-29813	FRAME, SWING DRAW BAR	1						
16	01574-51230	STUD	2						
17	04512-50120	WASHER, SPRING	2						
18	02176-50120	NUT	2						
19	01173-51435	BOLT	1						

----> Old replace New
<-X-> Not interchangeable
<-O-> Interchangeable with another part(s)
<---- New replace Old
<---> Interchangeable

CK30MEU-T345B **1**

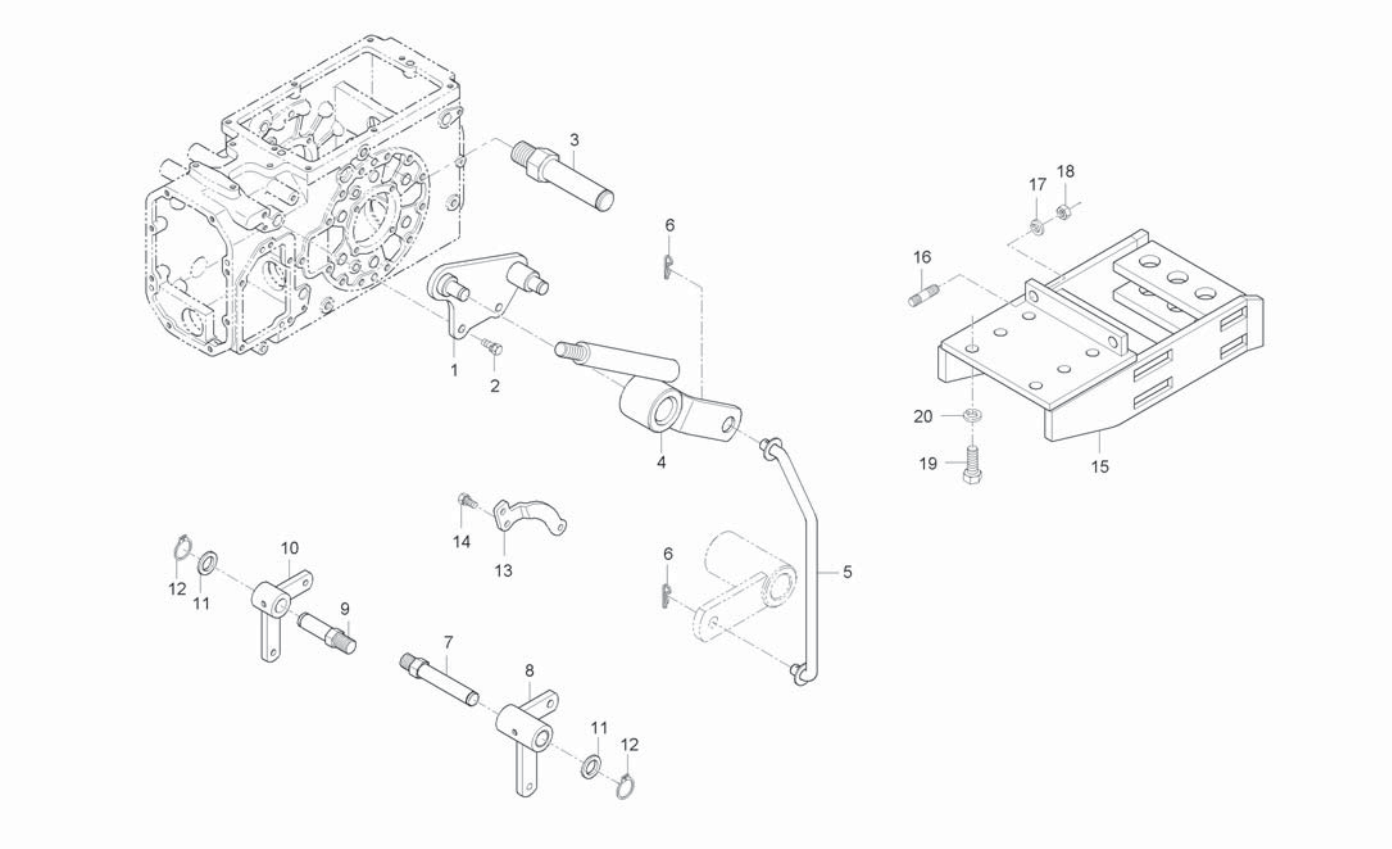

A : CK35-EU , B : CK35H-EU

No.	Part Number	Desciption	Q'TY A	B	C	D	E	I.C	Remark
20	04512-50140	WASHER, SPRING	6						

----> Old replace New
<-X-> Not interchangeable
<-O-> Interchangeable with another part(s)

<---- New replace Old
<---> Interchangeable

CK30M-T390A

PTO SHIFT LEVER GROUP

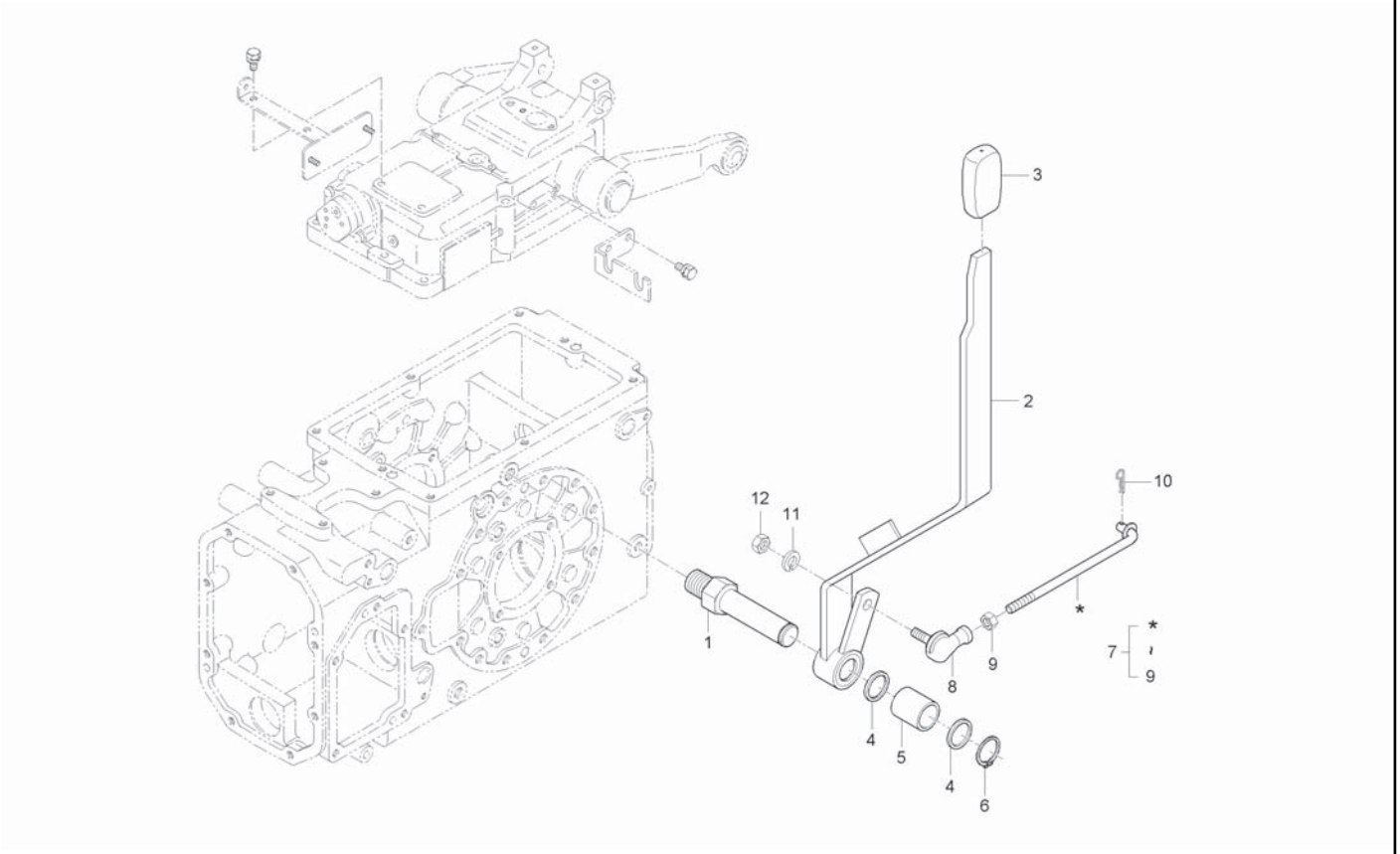

A : CK35-EU , B : CK35H-EU

No.	Part Number	Desciption	Q'TY A	Q'TY B	Q'TY C	Q'TY D	Q'TY E	I.C	Remark
1	T2185-24283	SHAFT, PTO	1	1					
2	T2185-25863	LEVER, PTO	1	1					
2	T2185-25864	LEVER, PTO	1	1				<--->	
3	T2350-25871	GRIP	1	1					
4	04011-50180	WASHER, PLAIN	2	2					T2.9
5	T2185-24292	SPACER, PTO MID	1	1					
6	04612-00180	SNAP RING	1	1					
7	T2195-65651	ROD, SHUTTLE	1	1					
8	K2400-22541	BALL JOINT, RH	1	1					
9	02112-50080	NUT	1	1					M8*P1.25
10	04512-50080	SPRING WASHER	1	1					M08
11	02156-50080	NUT	1	1					M8XP1.25
12	05525-50800	PIN, SNAP	1	1					

----> Old replace New
<-X-> Not interchangeable
<-O-> Interchangeable with another part(s)
<---- New replace Old
<---> Interchangeable

CK30M-T430A

FRONT DRIVE LEVER GROUP

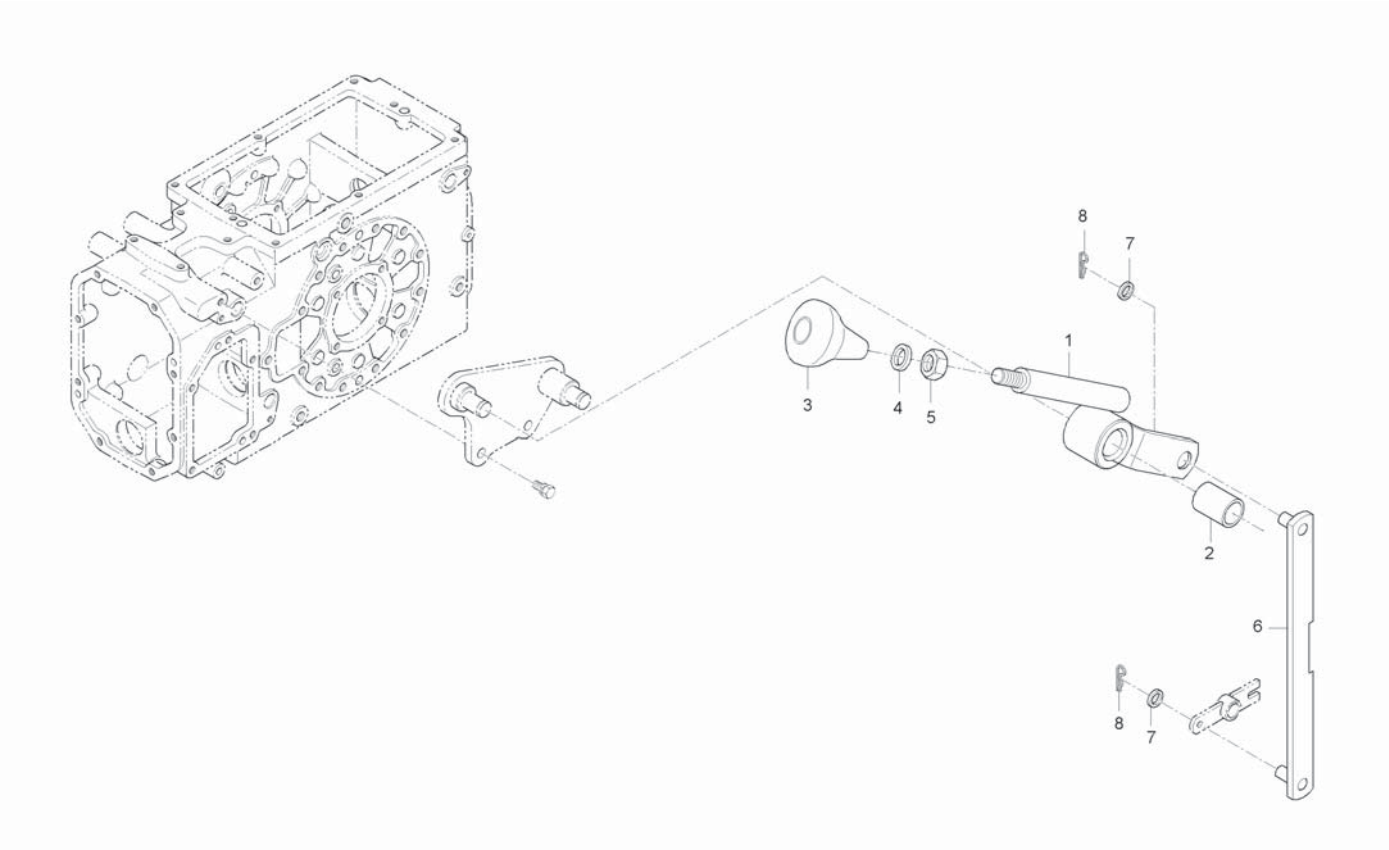

A : CK35-EU , B : CK35H-EU

No.	Part Number	Desciption	Q'TY A	Q'TY B	Q'TY C	Q'TY D	Q'TY E	I.C	Remark
1	T2185-44364	LEVER, FWD	1	1					
1	T2185-44365	LEVER, FWD	1	1 ~HT8900076				<----	
2	08511-01825	BUSH	1	1					
3	T2185-60932	GRIP, FWD	1	1					
3	T2185-60933	GRIP, FWD	1	1				<----	
4	04013-50100	WASHER, PLAIN	1	1					M10
5	02176-50100	NUT	1	1					M10X1.25
6	T2195-44341	ROD, 4WD	1	1					
7	04014-50100	WASHER, PLAIN	2	2					M10
8	05525-51000	PIN, SNAP	2	2					

----> Old replace New
<-X-> Not interchangeable
<-O-> Interchangeable with another part(s)
<---- New replace Old
<---> Interchangeable

CK30H-T470A

BRAKE PEDAL GROUP

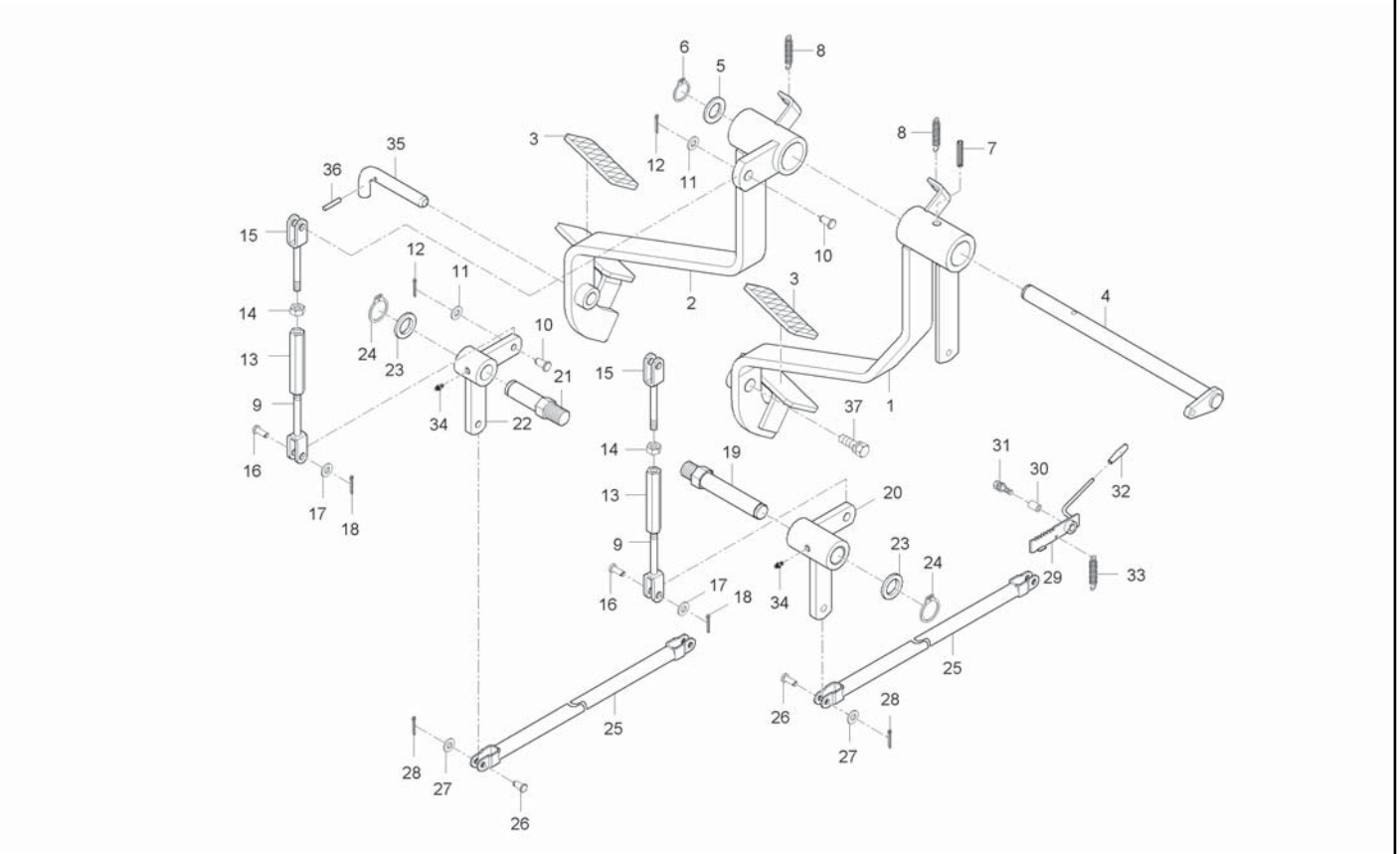

A : CK35-EU , B : CK35H-EU

No.	Part Number	Desciption	Q'TY A	Q'TY B	Q'TY C	Q'TY D	Q'TY E	I.C	Remark
1	T2195-55712	PEDAL ,BRAKE LH		1					
1	T2195-55713	PEDAL ,BRAKE LH		1				<----	
1	T2195-55714	PEDAL ,BRAKE LH		1				<----	
2	T2195-55722	PEDAL, BRAKE RH		1					
2	T2195-55723	PEDAL, BRAKE RH		1 ~HT8900076				<----	
2	T2195-55723BB	PEDAL, BRAKE RH		1 JT8900001~				<-X->	
3	T2195-55531	COVER, PEDAL		2					
4	T2185-55731	SHAFT, PEDAL		1 ~HT8900076					
4	T2185-55731BB	SHAFT, PEDAL		1 JT8900001~				<-X->	
5	84612-1445-0	COLLAR		1					
6	04612-00250	SNAP RING		1					
7	05411-00840	PIN, SPRING		1					DIA8*40
8	T2350-55961	SPRING, BRAKE		2					
9	T2610-55751	ROD 1, BRAKE		2					
10	05122-51028	JOINT PIN		2					DIA10
11	04013-50100	WASHER, PLAIN		2					M10
12	05511-50318	PIN, SPLIT		2					
13	32350-2898-4	BUCKLE, TURN		2					
14	02114-50100	NUT		2					M10*P1.5

----> Old replace New
<-X-> Not interchangeable
<-O-> Interchangeable with another part(s)
<---- New replace Old
<---> Interchangeable

CK30H-T470A

BRAKE PEDAL GROUP

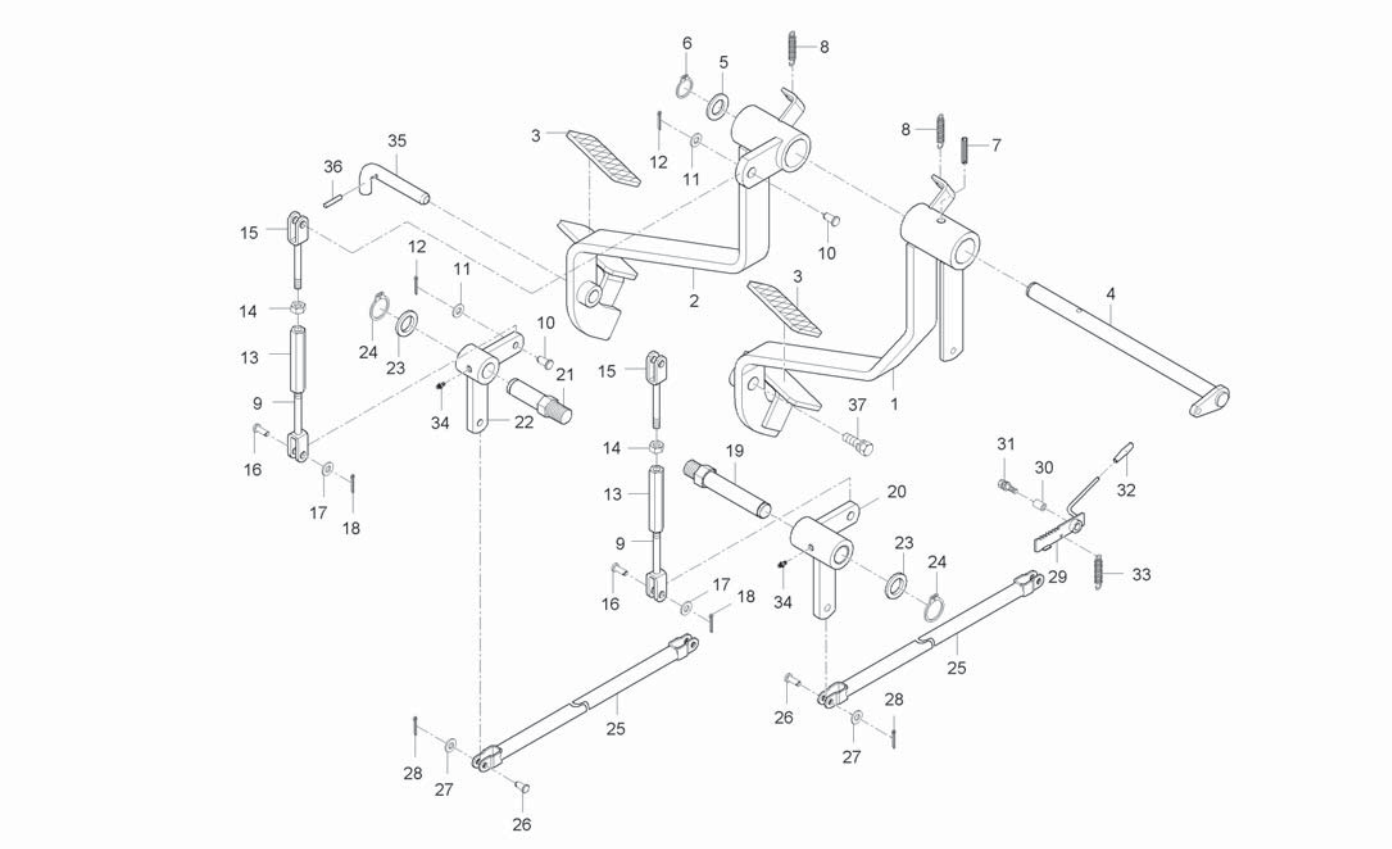

A : CK35-EU , B : CK35H-EU

No.	Part Number	Desciption	Q'TY A	Q'TY B	Q'TY C	Q'TY D	Q'TY E	I.C	Remark
15	T2185-55761	ROD 2, BRAKE		2					
16	05122-50825	JOINT PIN		2					
16	05122-51028	JOINT PIN		2				<----	DIA10
17	04013-50100	WASHER, PLAIN		2				<----	M10
18	05511-50318	PIN, SPLIT		2				<----	
19	T2185-55801	BRAKE SHAFT(LH)		1					
19	T2185-55802	SHAFT BRAKE, LH		1				<----	
20	T2185-55781	LEVER ,BRAKE		1 ~GT8900058					
20	T2185-55782	LEVER ,BRAKE		1 GT8900059~				<----	
21	T2185-55811	SHAFT BRAKE, RH		1					
21	T2185-55812	SHAFT BRAKE, RH		1				<----	
22	T2185-55792	LEVER ,BRAKE		1 ~GT8900058					
22	T2185-55793	LEVER ,BRAKE		1 GT8900059~				<----	
23	04011-50200	WASHER, PLAIN		2					
24	04612-00200	RING, SNAP		2					DIA20
25	T2610-55772	ROD 3, BRAKE		2 ~HT8900076					
25	T2610-55772BB	ROD 3, BRAKE		2 JT8900001~				<-X->	
26	05122-50828	JOINT PIN		4					
27	04013-50080	WASHER		4					M8

----> Old replace New
<-X-> Not interchangeable
<-O-> Interchangeable with another part(s)
<---- New replace Old
<---> Interchangeable

CK30H-T470A

BRAKE PEDAL GROUP

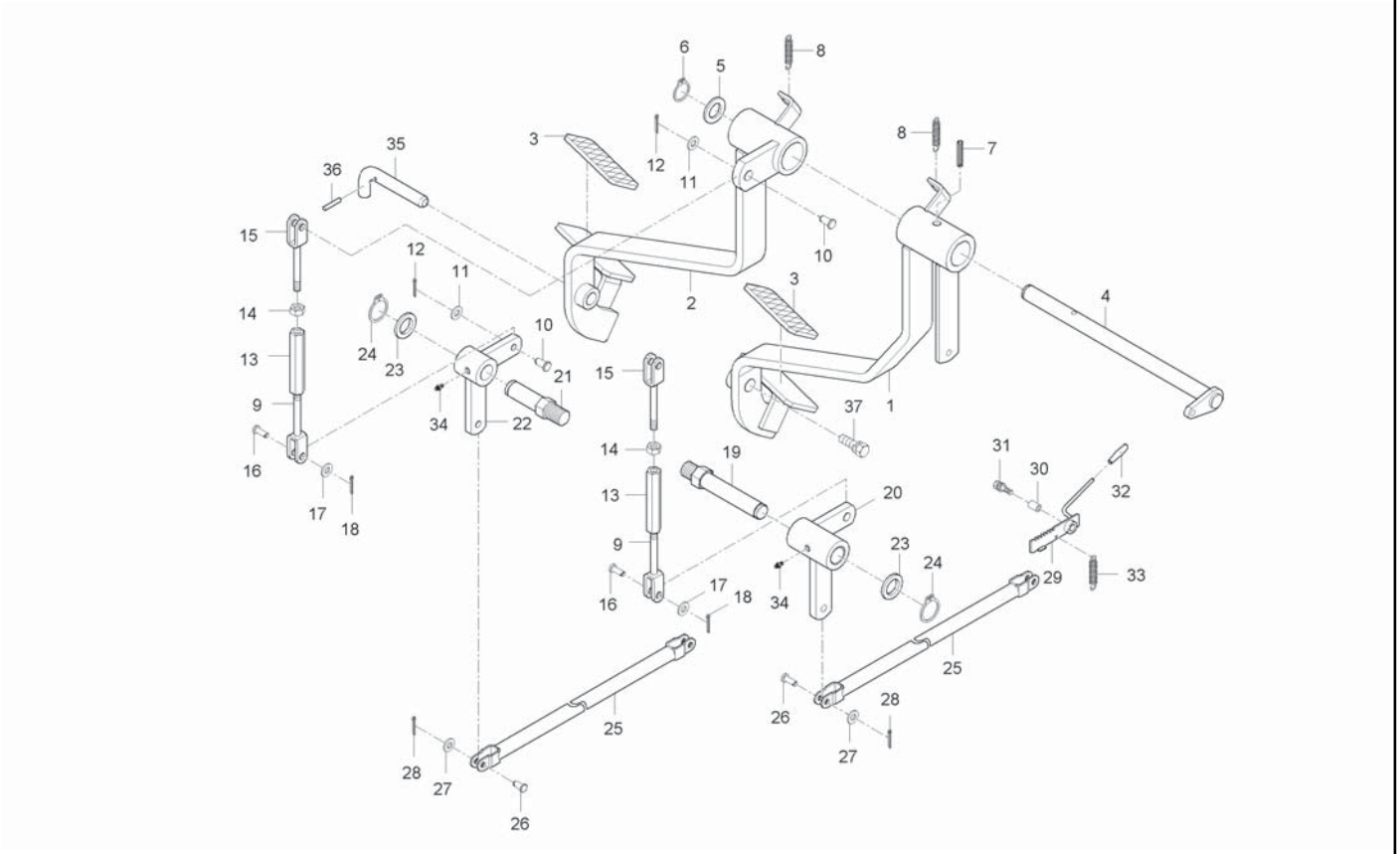

A : CK35-EU , B : CK35H-EU

No.	Part Number	Desciption	Q'TY A	Q'TY B	Q'TY C	Q'TY D	Q'TY E	I.C	Remark
28	05511-50218	PIN, SPLIT		4					DIA2*18
29	T2185-55911	LEVER, PARKING BRAKE		1					
29	T2185-55912	LEVER,SET		1				<----	
30	T2350-55951	SPACER, PARKING BRAKE		1					
31	01125-50825	BOLT, WASHER		1					M8*1.25
32	T2350-55922	GRIP, PARKING BRAKE		1					
33	T2670-55841	SPRING		1					
33	57781-5121-1	SPRING		1				<----	
34	06611-15675	NIPPLE, GREASE		1					M6*P1.0
35	T2350-55942	PIN HOLDER, BRAKE PEDAL		1					
36	05411-00325	PIN, SPRING		1					DIA3*25
37	01027-50614	BOLT, WASHER		1					

----> Old replace New
<-X-> Not interchangeable
<-O-> Interchangeable with another part(s)
<---- New replace Old
<---> Interchangeable

CK30ME-T470A

BRAKE PEDAL GROUP

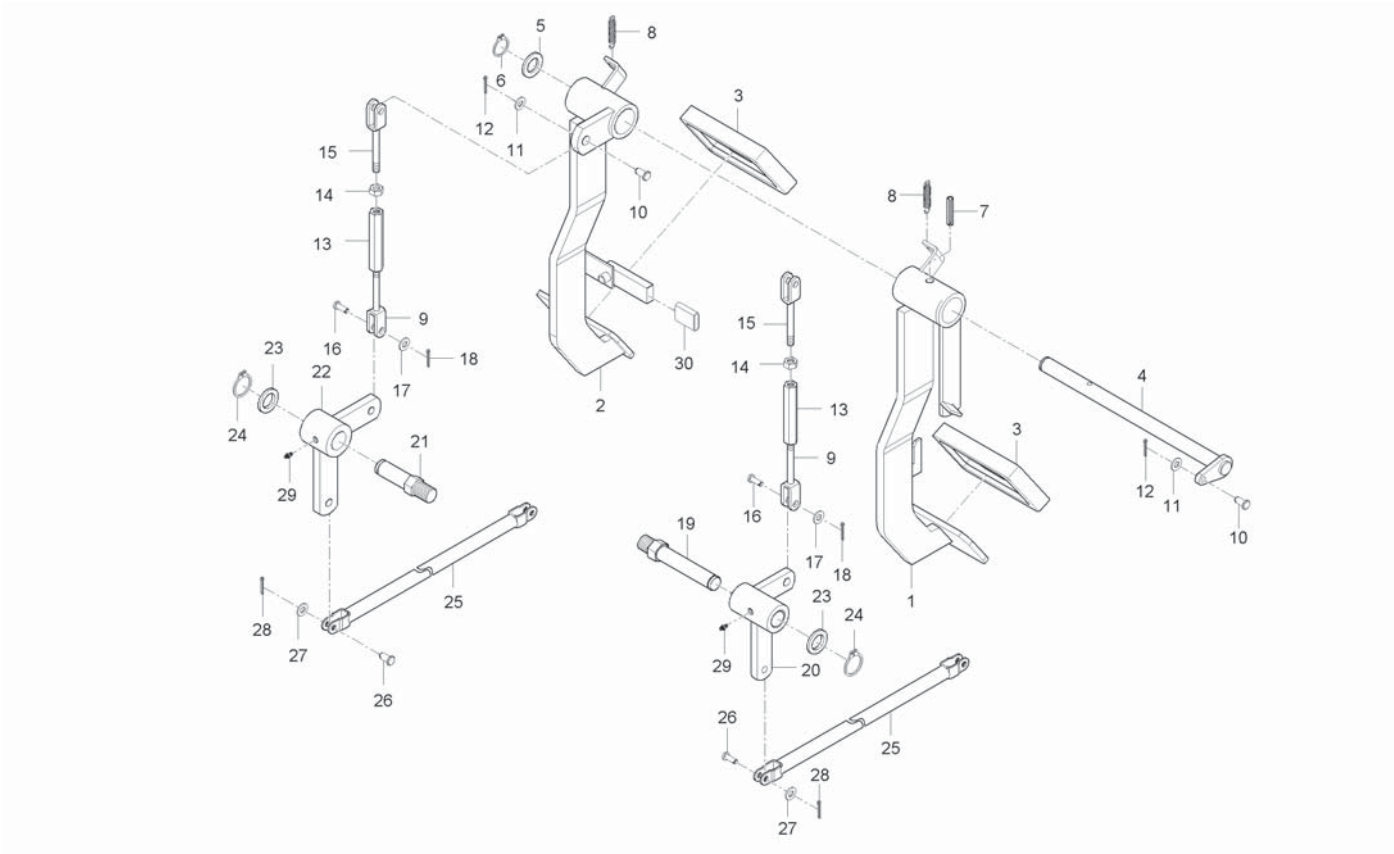

A : CK35-EU , B : CK35H-EU

No.	Part Number	Desciption	Q'TY A	Q'TY B	Q'TY C	Q'TY D	Q'TY E	I.C	Remark
1	T2185-55712	PEDAL ,BRAKE LH	1						
2	T2185-55722	PEDAL, BRAKE RH	1						
3	T2670-55531	COVER, PEDAL	2						
4	T2185-55731	SHAFT, PEDAL	1						
5	84612-1445-0	COLLAR	1						
6	04612-00250	SNAP RING	1						
7	05411-00840	PIN, SPRING	1						
8	T2350-55961	SPRING, BRAKE	2						
9	T2610-55751	ROD 1, BRAKE	2						
10	05122-51028	JOINT PIN	2						
11	04013-50100	WASHER, PLAIN	2						
12	05511-50318	PIN, SPLIT	2						
13	32350-2898-4	BUCKLE, TURN	2						
14	02176-50100	NUT	2						
15	T2185-55761	ROD 2, BRAKE	2						
16	05122-51028	JOINT PIN	2						
17	04013-50100	WASHER, PLAIN	2						
18	05511-50318	PIN, SPLIT	2						
19	T2185-55801	BRAKE SHAFT(LH)	1						

----> Old replace New
<-X-> Not interchangeable
<-O-> Interchangeable with another part(s)
<---- New replace Old
<---> Interchangeable

CK30ME-T470A

BRAKE PEDAL GROUP

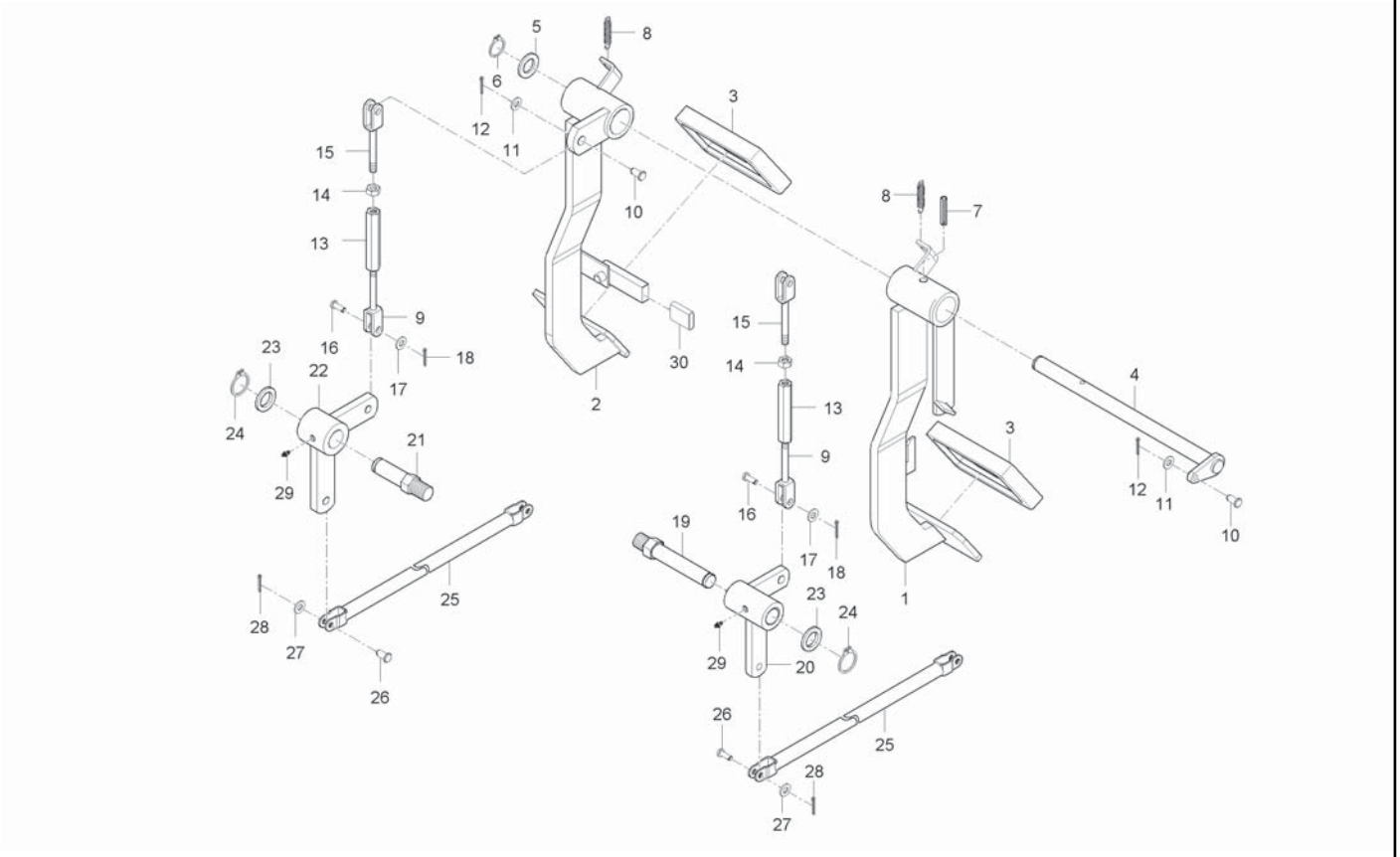

A : CK35-EU , B : CK35H-EU

No.	Part Number	Desciption	Q'TY A	Q'TY B	Q'TY C	Q'TY D	Q'TY E	I.C	Remark
19	T2185-55802	SHAFT BRAKE, LH	1					<----	
20	T2185-55781	LEVER ,BRAKE	1						
20	T2185-55782	LEVER ,BRAKE	1					<----	
21	T2185-55811	SHAFT BRAKE, RH	1						
21	T2185-55812	SHAFT BRAKE, RH	1					<----	
22	T2185-55792	LEVER ,BRAKE	1						
22	T2185-55793	LEVER ,BRAKE	1					<----	
23	04011-50200	WASHER, PLAIN	2						
24	04612-00200	RING, SNAP	2						
25	T2610-55772	ROD 3, BRAKE	2 ~HT8100038						
25	T2610-55772BB	ROD 3, BRAKE	2 HT8100039~					<-0->	
26	05122-50828	JOINT PIN	4						
27	04013-50080	WASHER	4						
28	05511-50218	PIN, SPLIT	4						
29	06611-15675	NIPPLE, GREASE	1						
30	T2612-24921	TUBE, VINIL	1						

----> Old replace New
<-X-> Not interchangeable
<-O-> Interchangeable with another part(s)
<---- New replace Old
<---> Interchangeable

CK30ME-T475A

PARKING BRAKE GROUP

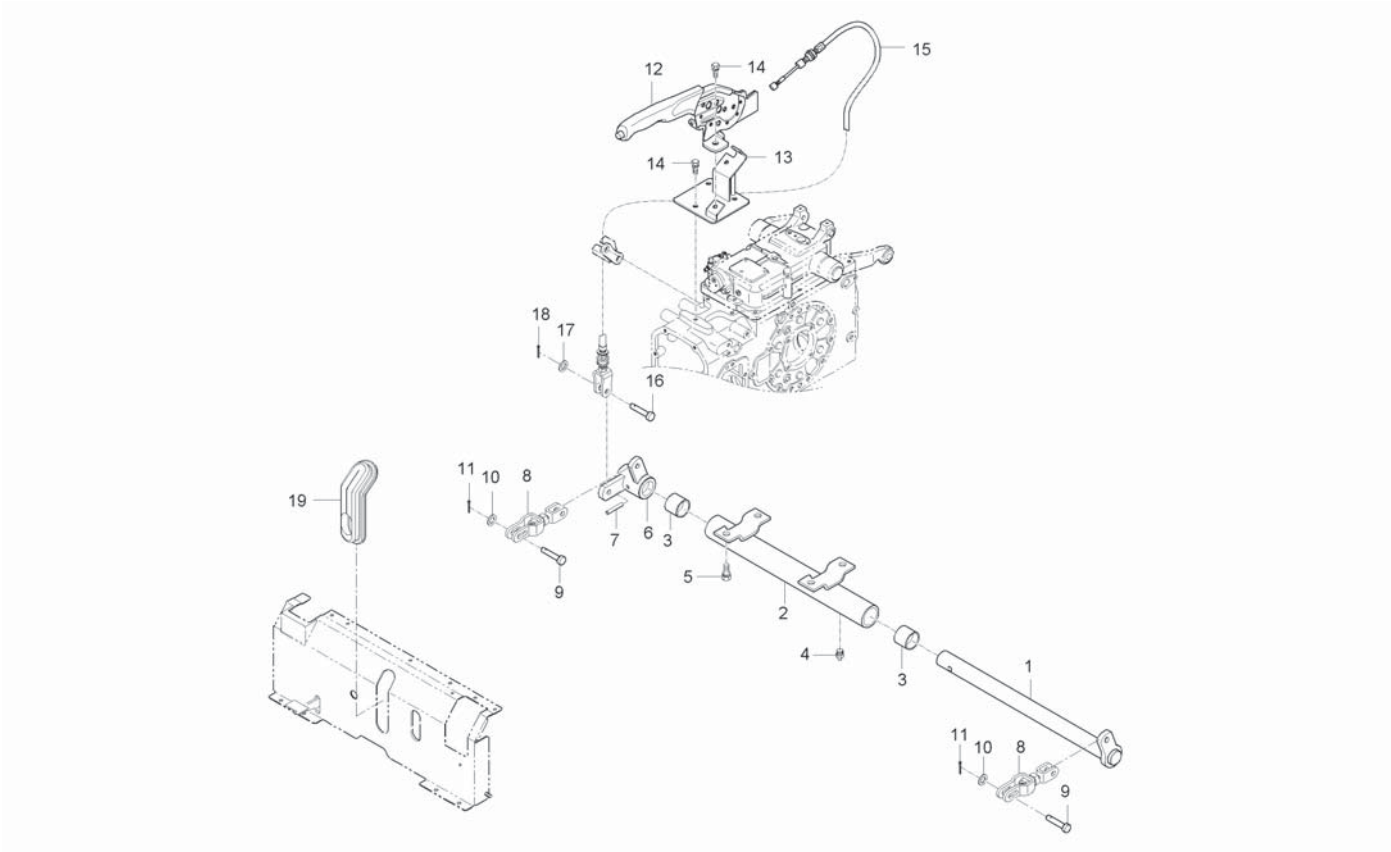

A : CK35-EU , B : CK35H-EU

No.	Part Number	Desciption	Q'TY A	Q'TY B	Q'TY C	Q'TY D	Q'TY E	I.C	Remark
1	T2181-55961	SHAFT	1						
2	T2181-55951	STAY, PEDAL	1						
3	34150-2843-1	BUSH	2						
4	06611-15675	NIPPLE, GREASE	2						
5	01133-51020	BOLT, WASHER	4						
6	T2181-55981	LEVER, BRAKE RH	1						
7	05411-00840	PIN, SPRING	1						
8	T2181-55991	ROD, CONNECTING	2						
9	05112-50825	JOINT PIN	4						
10	04012-50080	WASHER, PLAIN	4						
11	05511-50125	PIN, SPLIT	4						
12	T4815-65511	PARKING BRAKE ASSY	1						
13	T2181-55941	BRACKET, PARKING BRAKE ATTACHED	1						
13	T2181-55942	BRACKET, PARKING BRAKE ATTACHED	1					<----	
14	01133-51020	BOLT, WASHER	6						
15	T4835-65432	CABLE, PARKING BRAKE	1						
16	05122-51025	JOINT PIN	1						
17	04013-50100	WASHER, PLAIN	1						
18	05511-50325	PIN, SPLIT	1						

----> Old replace New
<-X-> Not interchangeable
<-O-> Interchangeable with another part(s)
<---- New replace Old
<---> Interchangeable

CK30ME-T475A

PARKING BRAKE GROUP

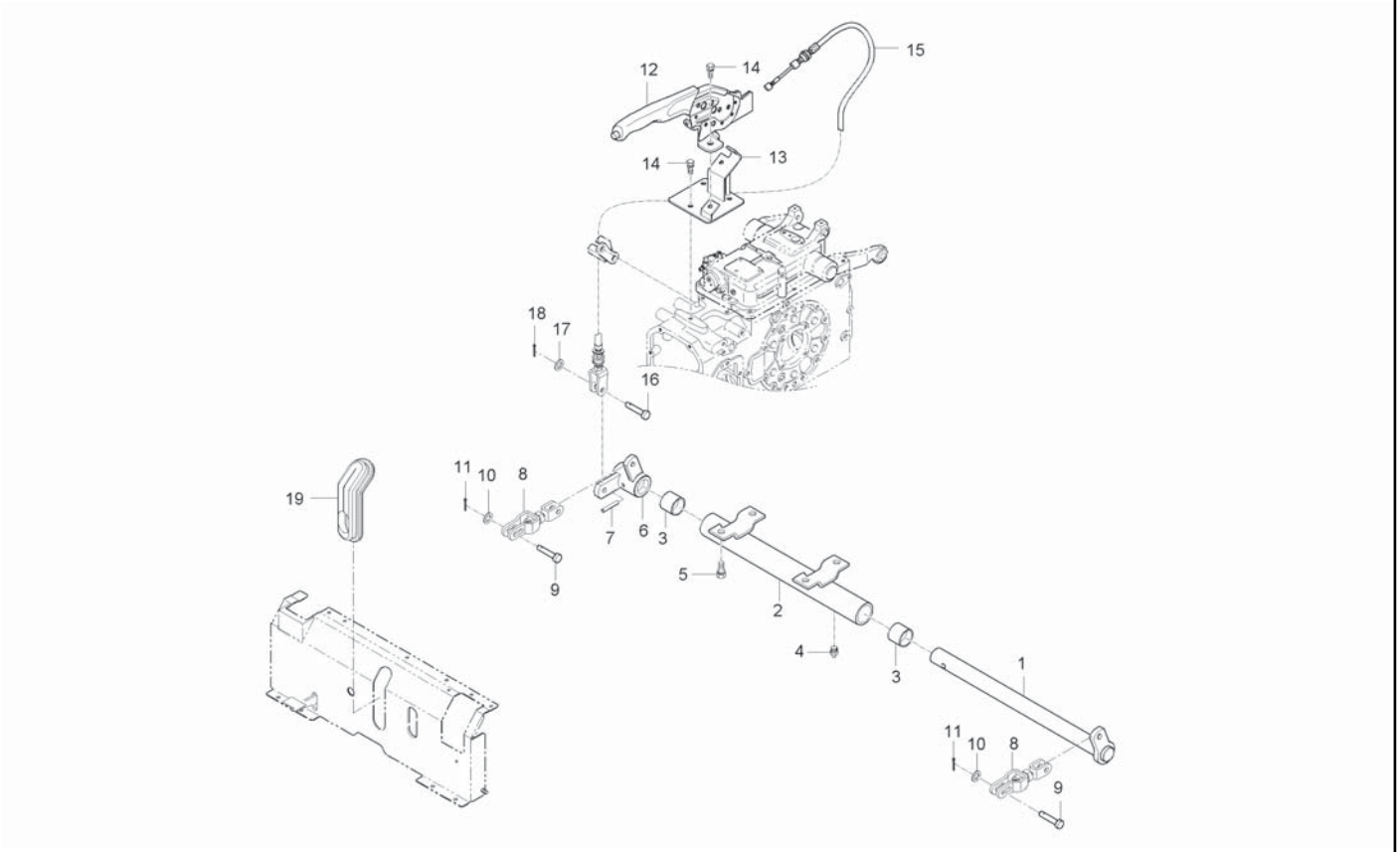

A : CK35-EU , B : CK35H-EU

No.	Part Number	Desciption	Q'TY A	B	C	D	E	I.C	Remark
19	T2181-70511	PARKING BRAKE CREASE RUBBER	1						

----> Old replace New
<-X-> Not interchangeable
<-O-> Interchangeable with another part(s)
<---- New replace Old
<---> Interchangeable

CK30M-T500A

FRONT AXLE FRAME GROUP

(CK35-EU : ~ FT8100016)

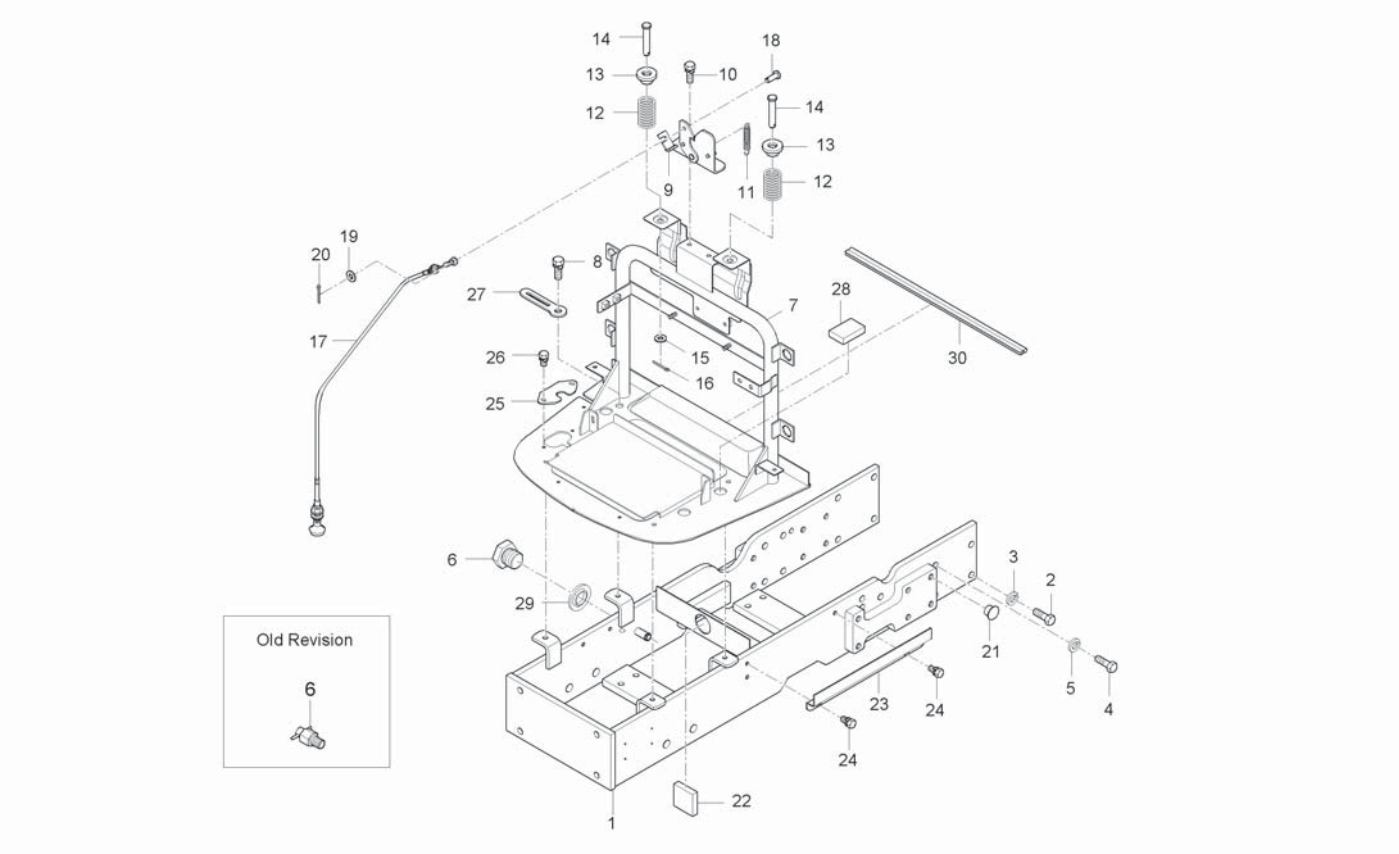

A : CK35-EU , B : CK35H-EU

No.	Part Number	Desciption	Q'TY A	Q'TY B	Q'TY C	Q'TY D	Q'TY E	I.C	Remark
1	T2185-50015	FRAME, FRONT AXLE	1						
2	01176-51235	BOLT	15						
3	04512-50120	WASHER, SPRING	15						
4	01173-51030	BOLT	1						
5	04512-50100	WASHER, SPRING	1						
6	06311-45030	PLUG	1						
7	T2185-50203	SUPPORT, RADIATOR	1						
8	01123-50822	BOLT	4						
9	T4682-50682	CATCH ASSY	1						
10	01123-50816	BOLT, WASHER	2						
11	57781-5121-1	SPRING	1						
12	T4682-50351	SPRING, BONNET	2						
13	T4682-50361	RUBBER, CUSHION	2						
14	05122-51055	JOINT PIN	2						
15	04013-50100	WASHER, PLAIN	2						
16	05511-50320	PIN, SPLIT	2						
17	T2185-50692	CABLE, BONNET OPEN	1						
18	05122-50614	JOINT PIN	1						
19	04014-50060	WASHER, PLAIN	1						

----> Old replace New
<-X-> Not interchangeable
<-O-> Interchangeable with another part(s)
<---- New replace Old
<---> Interchangeable

CK30M-T500A

FRONT AXLE FRAME GROUP

(CK35-EU : ~ FT8100016)

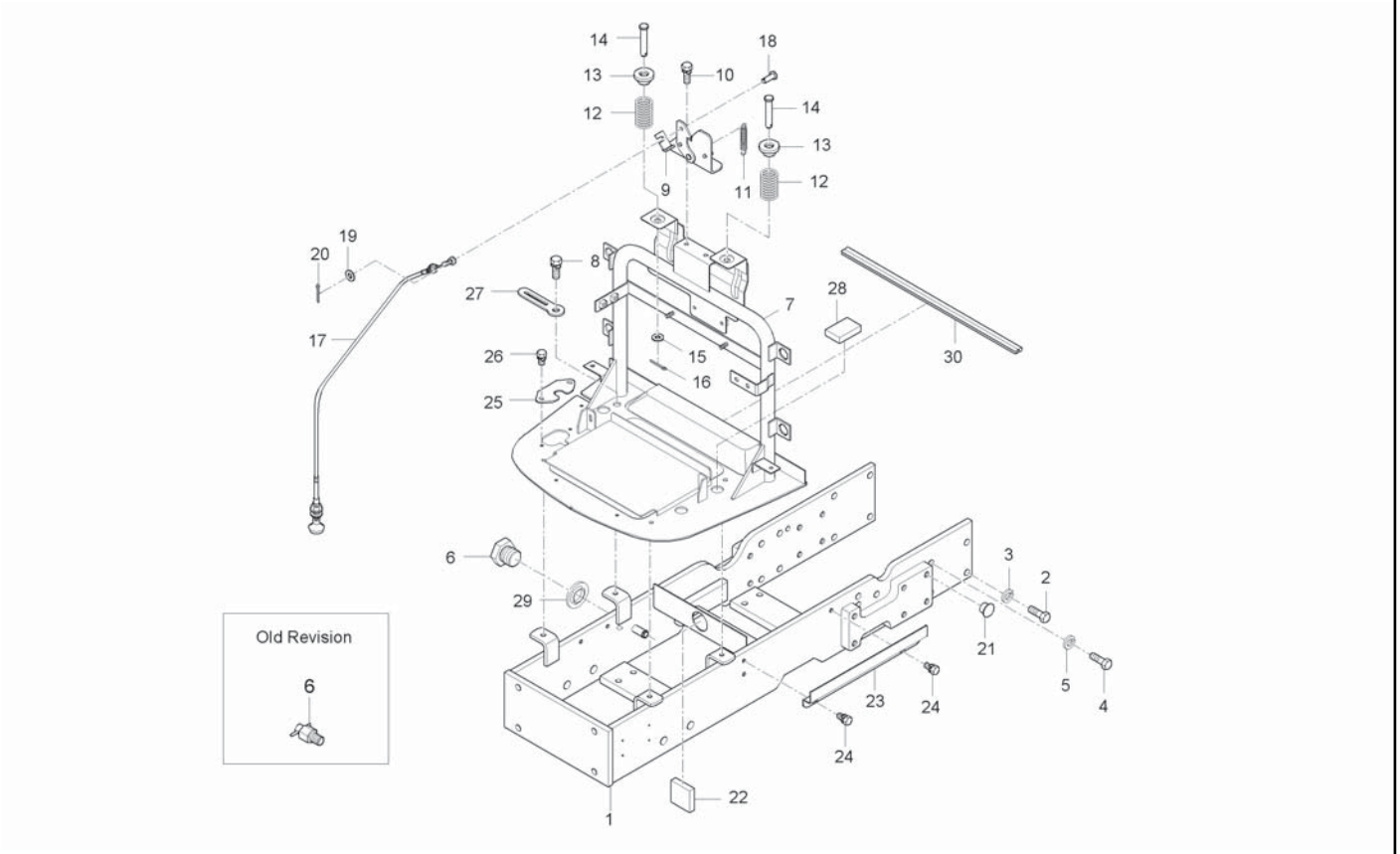

A : CK35-EU , B : CK35H-EU

No.	Part Number	Desciption	Q'TY A	B	C	D	E	I.C	Remark
20	05511-51615	PIN, SPLIT	1						
21	32210-2758-1	PLUG	12						
22	T2350-50021	SPONGE	1						
23	T2185-50051	WIRE HARNESS GUIDE	1						
24	01123-50816	BOLT, WASHER	2						
25	T2185-50441	PLATE, GUIDE	1						
26	01025-50616	BOLT, WASHER	2						
27	37150-3447-1	CLAMP,CORD	1						
28	T2350-37551	SPONGE, OIL COOLER	2						
29	04717-01700	WASHER, SEAL	1						
30	T2185-50091	RUBBER	1						

----> Old replace New
<-X-> Not interchangeable
<-O-> Interchangeable with another part(s)

<---- New replace Old
<---> Interchangeable

CK35H-T500A

FRONT AXLE FRAME GROUP

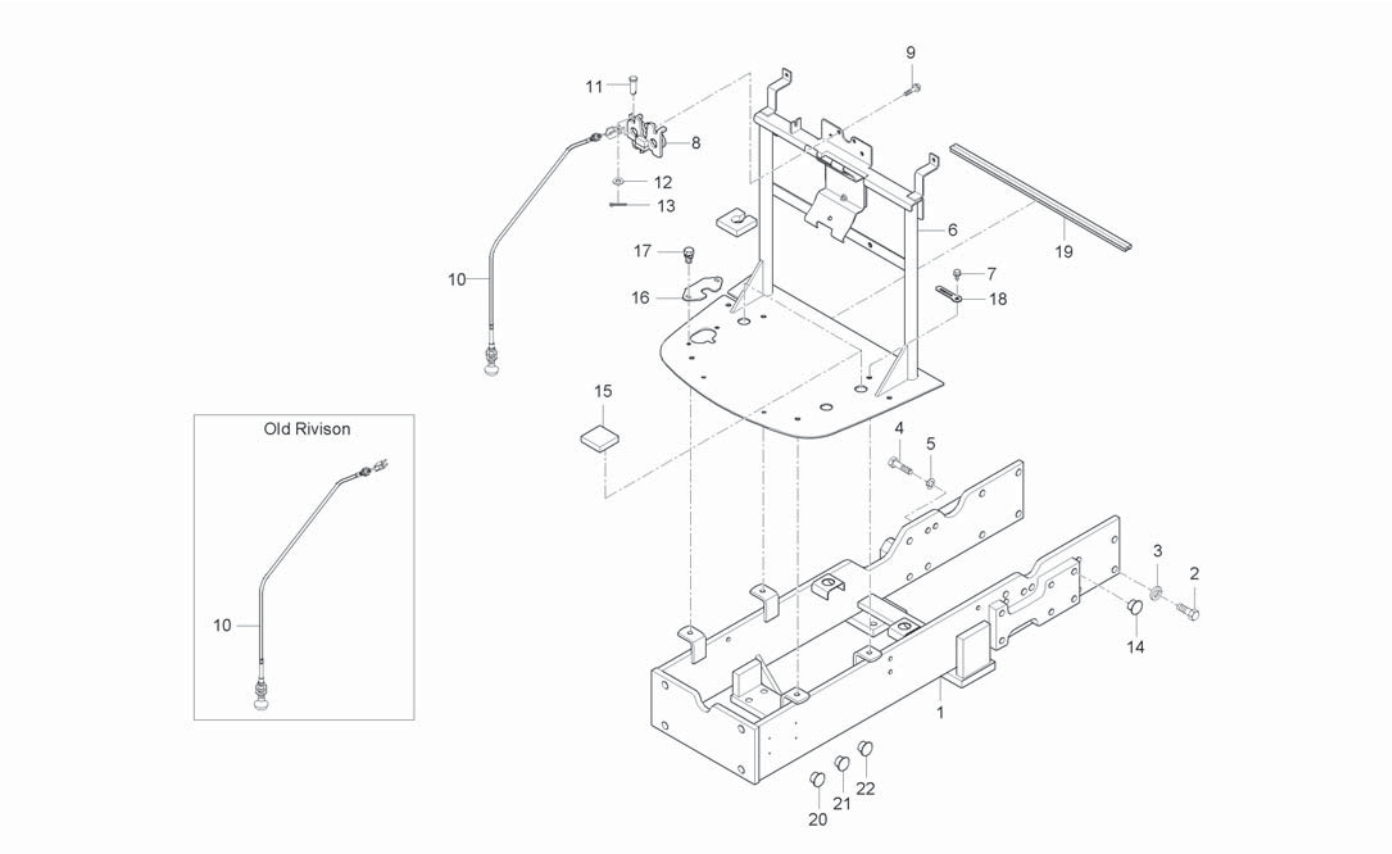

A : CK35-EU , B : CK35H-EU

No.	Part Number	Desciption	Q'TY A	Q'TY B	Q'TY C	Q'TY D	Q'TY E	I.C	Remark
1	T2155-50011	FRAME, FRONT AXLE		1 ~HT8900076					
1	T2155-50011BB	FRAME, FRONT AXLE		1 JT8900001~				<-X->	
1	T2155-50012	FRAME, FRONT AXLE		1				<-0->	
1	T2155-50013	FRAME, FRONT AXLE		1				<--->	
2	01176-51235	BOLT		15					
3	04512-50120	WASHER, SPRING		15					M12
4	01173-51030	BOLT		1					M10*P1.25*30
5	04512-50100	WASHER, SPRING		1					M10
6	T2155-50201	SUPPORT, RADIATOR		1 ~HT8900076					
6	T2155-50201ED	SUPPORT, RADIATOR		1 JT8900001~				<-X->	
6	T2155-50202	SUPPORT, RADIATOR		1				<-X->	
6	T2155-50203	SUPPORT, RADIATOR		1				<-X->	
7	01123-50822	BOLT		4					M8XP1.25
8	T4125-50681	CATCH ASSY		1					
8	T4145-60581	HANDLE ASSY		1				<-X->	
8	T4145-60582	HANDLE ASSY		1				<-X->	
9	01754-50625	BOLT, FLANGE		4					7T
10	T4125-50692	CABLE, BONNET OPEN		1					
10	T4125-50693	CABLE, BONNET OPEN		1				<--->	

----> Old replace New
<-X-> Not interchangeable
<-0-> Interchangeable with another part(s)
<---- New replace Old
<---> Interchangeable

CK35H-T500A

FRONT AXLE FRAME GROUP

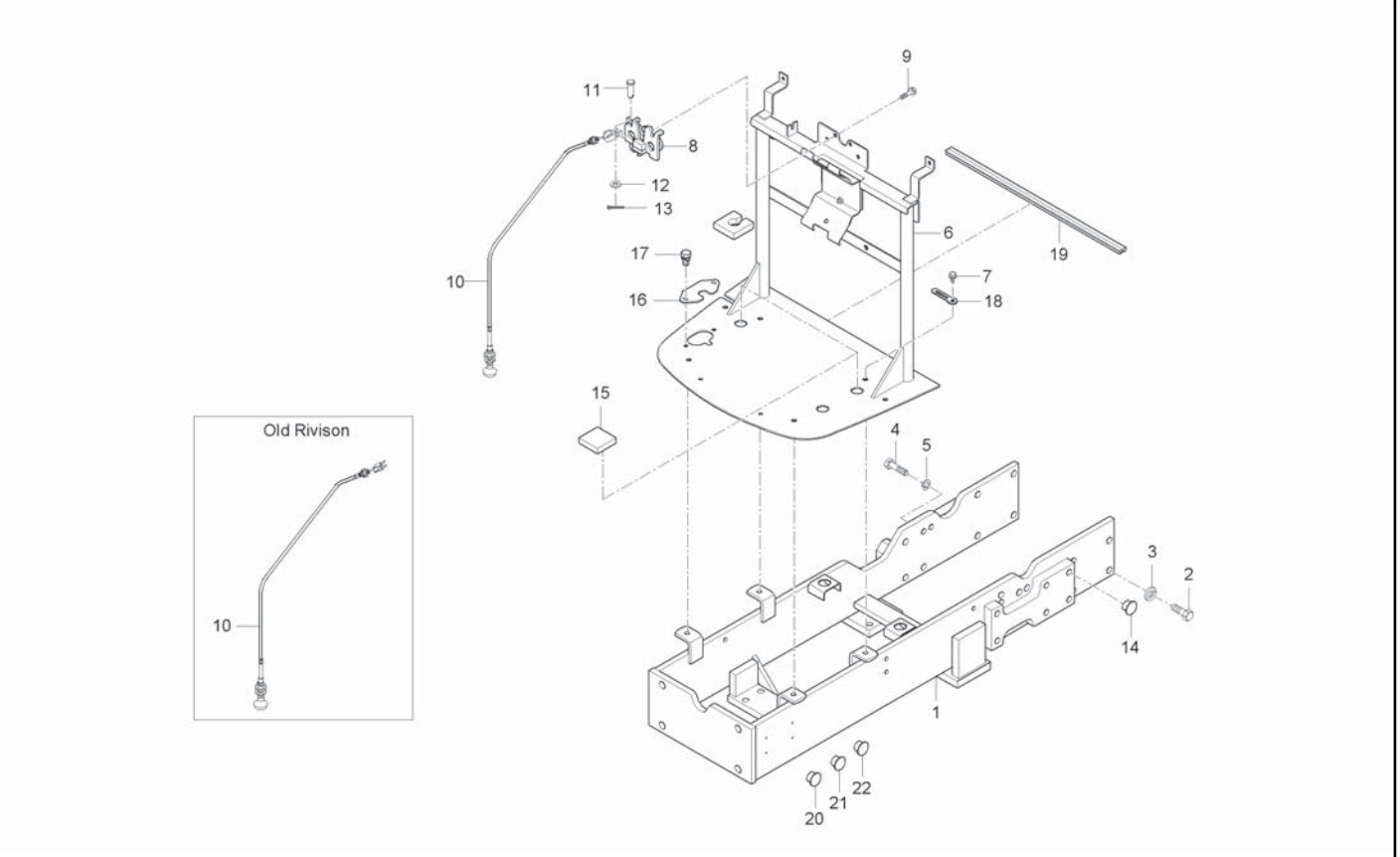

A : CK35-EU , B : CK35H-EU

No.	Part Number	Desciption	Q'TY A	Q'TY B	Q'TY C	Q'TY D	Q'TY E	I.C	Remark
11	05122-50614	JOINT PIN		1					
12	04014-50060	WASHER, PLAIN		1					
13	05511-51615	PIN, SPLIT		1					
14	32210-2758-1	PLUG		12					
15	T2350-50021	SPONGE		1					
16	T2185-50441	PLATE, GUIDE		1					
17	01025-50616	BOLT, WASHER		2					M6*P1
18	37150-3447-1	CLAMP,CORD		1					
19	T2155-13691	RUBBER, RADIATOR		1					
20	T4520-26911	PLUG		7					
21	31220-1429-3	PLUG		9					
22	32210-2758-1	PLUG		2					

----> Old replace New
<-X-> Not interchangeable
<-O-> Interchangeable with another part(s)

<---- New replace Old
<---> Interchangeable

CK35M-T500A

FRONT AXLE FRAME GROUP

(CK35-EU : GT8100001 ~)

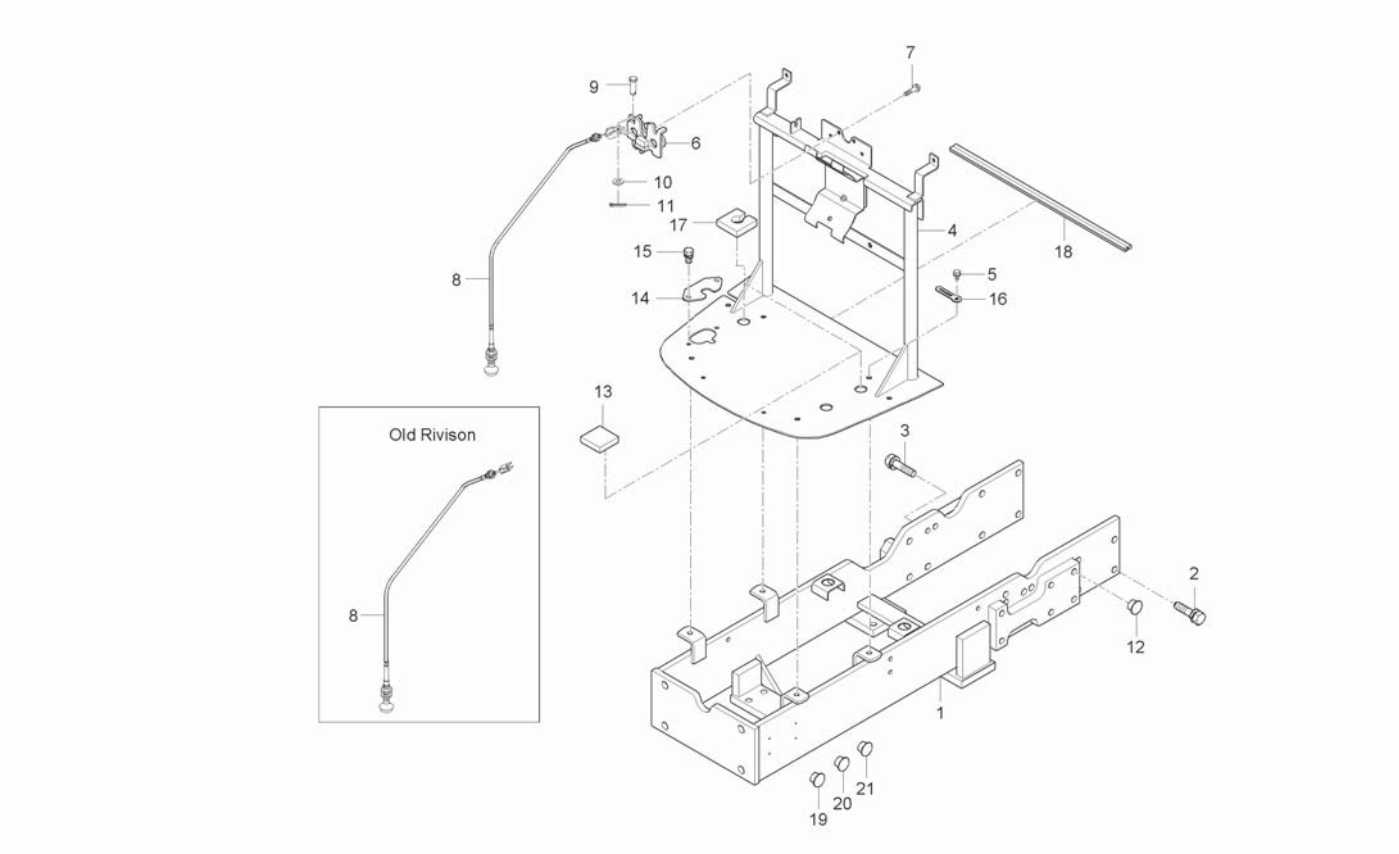

A : CK35-EU , B : CK35H-EU

No.	Part Number	Desciption	Q'TY A	Q'TY B	Q'TY C	Q'TY D	Q'TY E	I.C	Remark
1	T2155-50011	FRAME, FRONT AXLE	1 ~HT8100038						
1	T2155-50011BB	FRAME, FRONT AXLE	1 HT8100039~					<-X->	
1	T2155-50012	FRAME, FRONT AXLE	1					<-0->	
1	T2155-50013	FRAME, FRONT AXLE	1					<--->	
2	01177-51235	BOLT, WASHER	15						
3	01133-51030	BOLT, WASHER	1						
4	T2145-50201	SUPPORT, RADIATOR	1						
4	T2145-50202	SUPPORT, RADIATOR	1					<-X->	
4	T2145-50203	SUPPORT, RADIATOR	1					<-X->	
5	01123-50822	BOLT	4						
6	T4125-50681	CATCH ASSY	1						
6	T4145-60581	HANDLE ASSY	1					<-X->	
6	T4145-60582	HANDLE ASSY	1					<-X->	
7	01754-50625	BOLT, FLANGE	4						
8	T4125-50691	CABLE, BONNET OPEN	1						
8	T4125-50692	CABLE, BONNET OPEN	1					<-X->	
8	T4125-50693	CABLE, BONNET OPEN	1					<--->	
9	05122-50614	JOINT PIN	1						
10	04014-50060	WASHER, PLAIN	1						

----> Old replace New
<-X-> Not interchangeable
<-0-> Interchangeable with another part(s)
<---- New replace Old
<---> Interchangeable

CK35M-T500A

FRONT AXLE FRAME GROUP

(CK35-EU : GT8100001 ~)

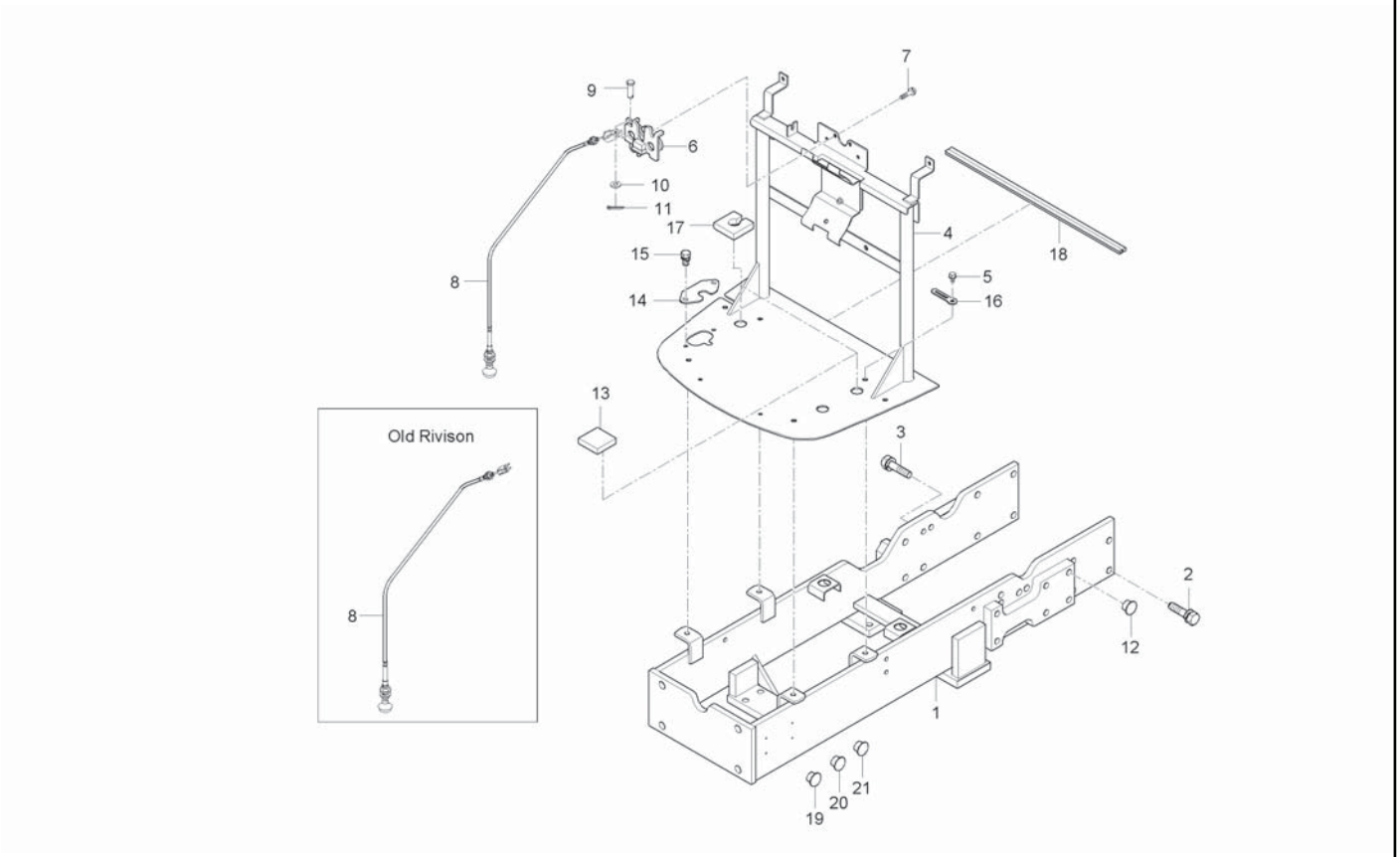

A : CK35-EU , B : CK35H-EU

No.	Part Number	Desciption	Q'TY A	B	C	D	E	I.C	Remark
11	05511-51615	PIN, SPLIT	1						
12	32210-2758-1	PLUG	12						
13	T2350-50021	SPONGE	1						
14	T2185-50441	PLATE, GUIDE	1						
15	01754-50616	BOLT, FLANGE	2						
15	01754-50612	BOLT, FLANGE	2					<--->	
16	37150-3447-1	CLAMP,CORD	1						
17	T2350-37551	SPONGE, OIL COOLER	2						
18	T2155-13691	RUBBER, RADIATOR	1						
19	T4520-26911	PLUG	7						
20	31220-1429-3	PLUG	9						
21	32210-2758-1	PLUG	2						

----> Old replace New
<-X-> Not interchangeable
<-O-> Interchangeable with another part(s)
<---- New replace Old
<---> Interchangeable

CK30M-T600A FRONT AXLE BRACKET GROUP

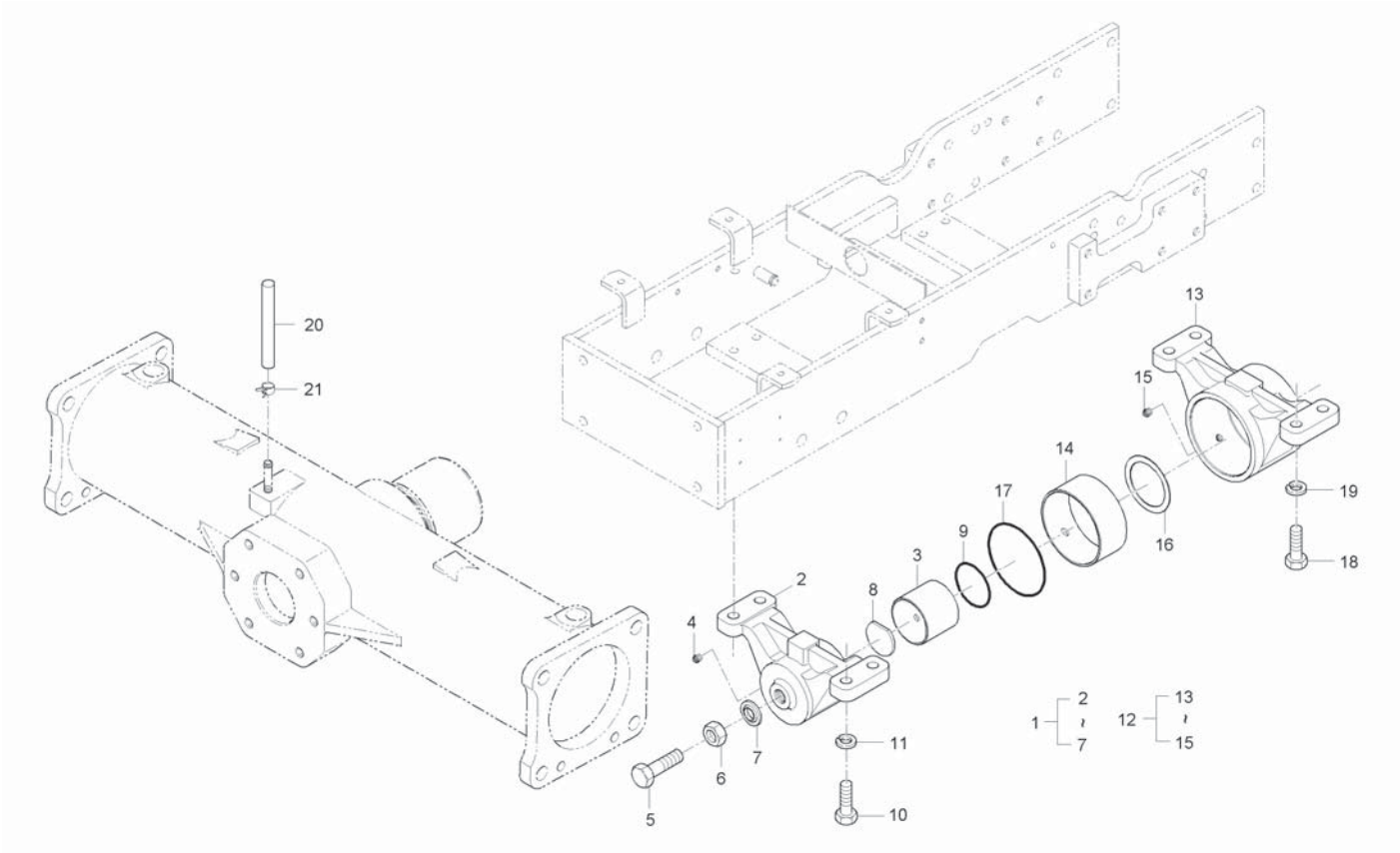

A : CK35-EU , B : CK35H-EU

No.	Part Number	Desciption	Q'TY A	Q'TY B	Q'TY C	Q'TY D	Q'TY E	I.C	Remark
1	T2185-41601	BRACKET ASSY, FR	1	1					
2	T2185-41611	BRACKET, FR	1	1					
3	T4520-43601	BUSH, DX	1	1					
4	06613-10010	NIPPLE, GREASE	1	1					A-M6F
5	38630-4476-1	BOLT, ADJUSTING	1	1					
6	02172-50160	NUT	1	1					M16*P1.5
7	38440-4475-1	WASHER, SEAL	1	1					
8	38440-4467-3	COLLAR	1	1					
9	04811-00490	O RING	1	1					
10	01176-51235	BOLT	4	4					
10	01177-51235	BOLT, WASHER	4	4				<--->	M12XP1.25(9T /스프링
11	T2185-41631	BRACKET ASSY, RR	1	4					
12	T2185-41621	BRACKET, RR	1	1					
13	T2185-41691	BUSH, DX	1	1					
14	06613-10010	NIPPLE, GREASE	1	1					A-M6F
15	T2185-44641	COLLAR, THRUST	1	1					
16	04811-50850	O RING	1	1					
17	01177-51235	BOLT, WASHER	4	1					M12XP1.25(9T /스프링
17	01177-51235	BOLT, WASHER	2					<--->	

----> Old replace New
<-X-> Not interchangeable
<-O-> Interchangeable with another part(s)
<---- New replace Old
<---> Interchangeable

CK30M-T600A

FRONT AXLE BRACKET GROUP

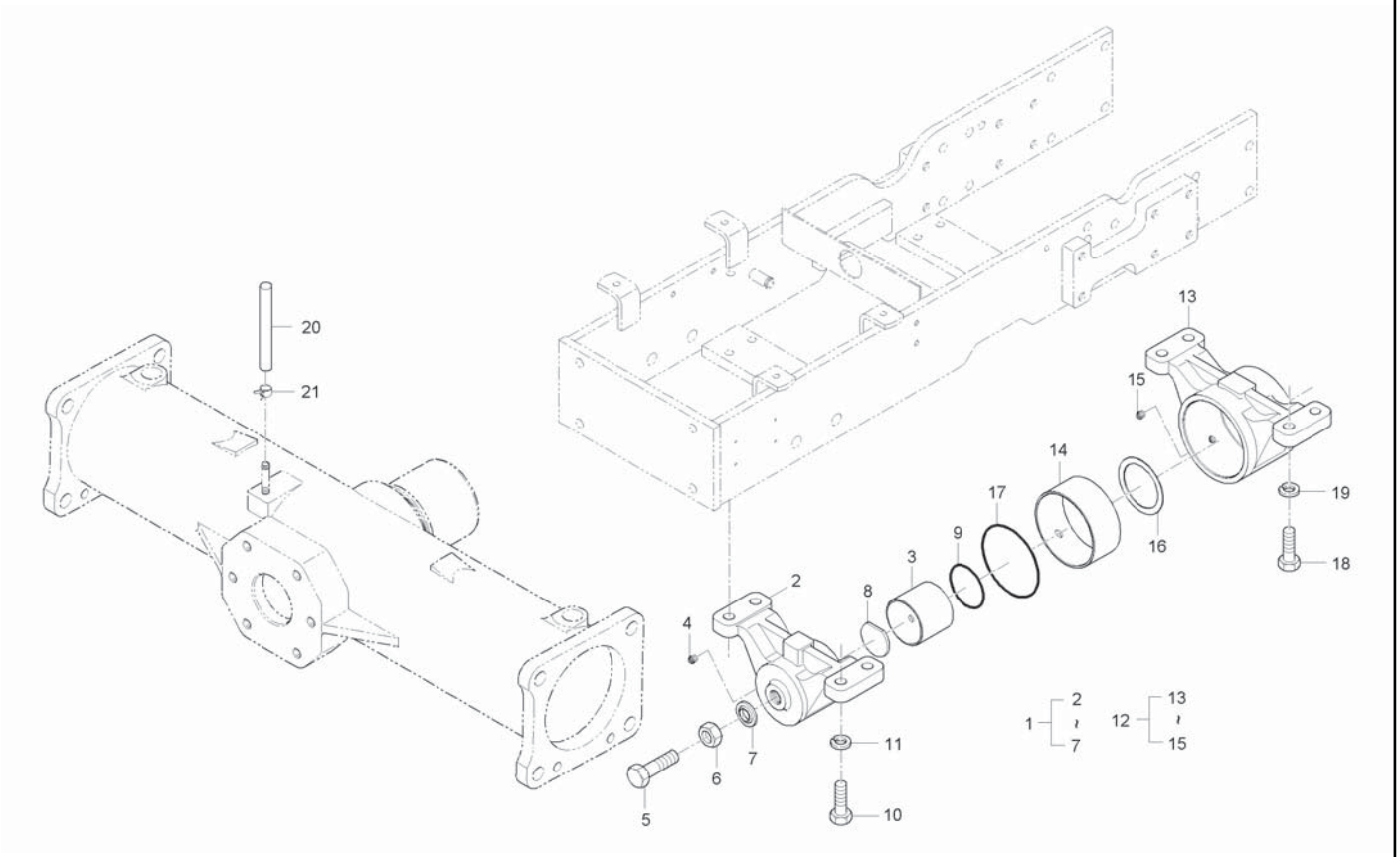

A : CK35-EU , B : CK35H-EU

No.	Part Number	Desciption	Q'TY A	Q'TY B	Q'TY C	Q'TY D	Q'TY E	I.C	Remark
18	04512-50120	WASHER, SPRING	2	4					M12
19	02176-50120	NUT	2	4					M12*1.25
20	T2350-42171	TUBE, OVER FLOW	1	1					
21	15301-7247-0	CLIP, TUBE	1 ~HT8100038	1 ~HT8900076					
21	14911-4275-1	CLIP, TUBE	1 HT8100039~	1 JT8900001~				<-0->	

----> Old replace New
<-X-> Not interchangeable
<-O-> Interchangeable with another part(s)
<---- New replace Old
<---> Interchangeable

CK30M-T730A

OIL INLET TUBE GROUP

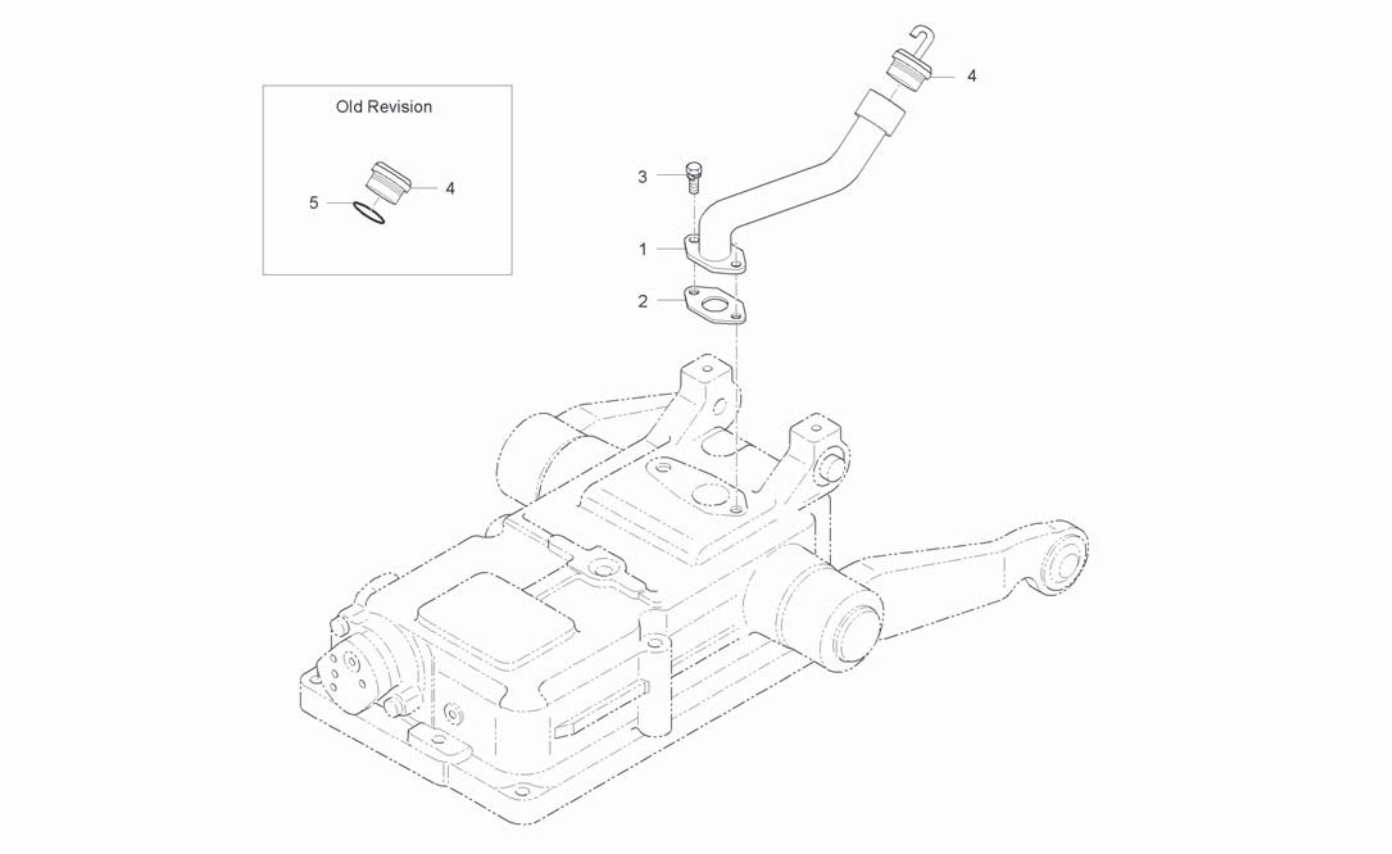

A : CK35-EU , B : CK35H-EU

No.	Part Number	Desciption	Q'TY A	Q'TY B	Q'TY C	Q'TY D	Q'TY E	I.C	Remark
1	T2185-35004	TUBE, OILING	1	1					
2	T4620-35011	PACKING	1	1					
2	T4620-35012	PACKING	1	1				<----	
3	01133-51018	BOLT, WASHER	2	2					
4	T4680-36001	AIR BREATHER	1	1					
4	T4680-36002	AIR BREATHER	1	1				<----	
5	04811-50300	O RING	1	1					G30

----> Old replace New
<-X-> Not interchangeable
<-O-> Interchangeable with another part(s)
<---- New replace Old
<---> Interchangeable

CK30H-T770A

DOWN SPEED CONTROL GROUP

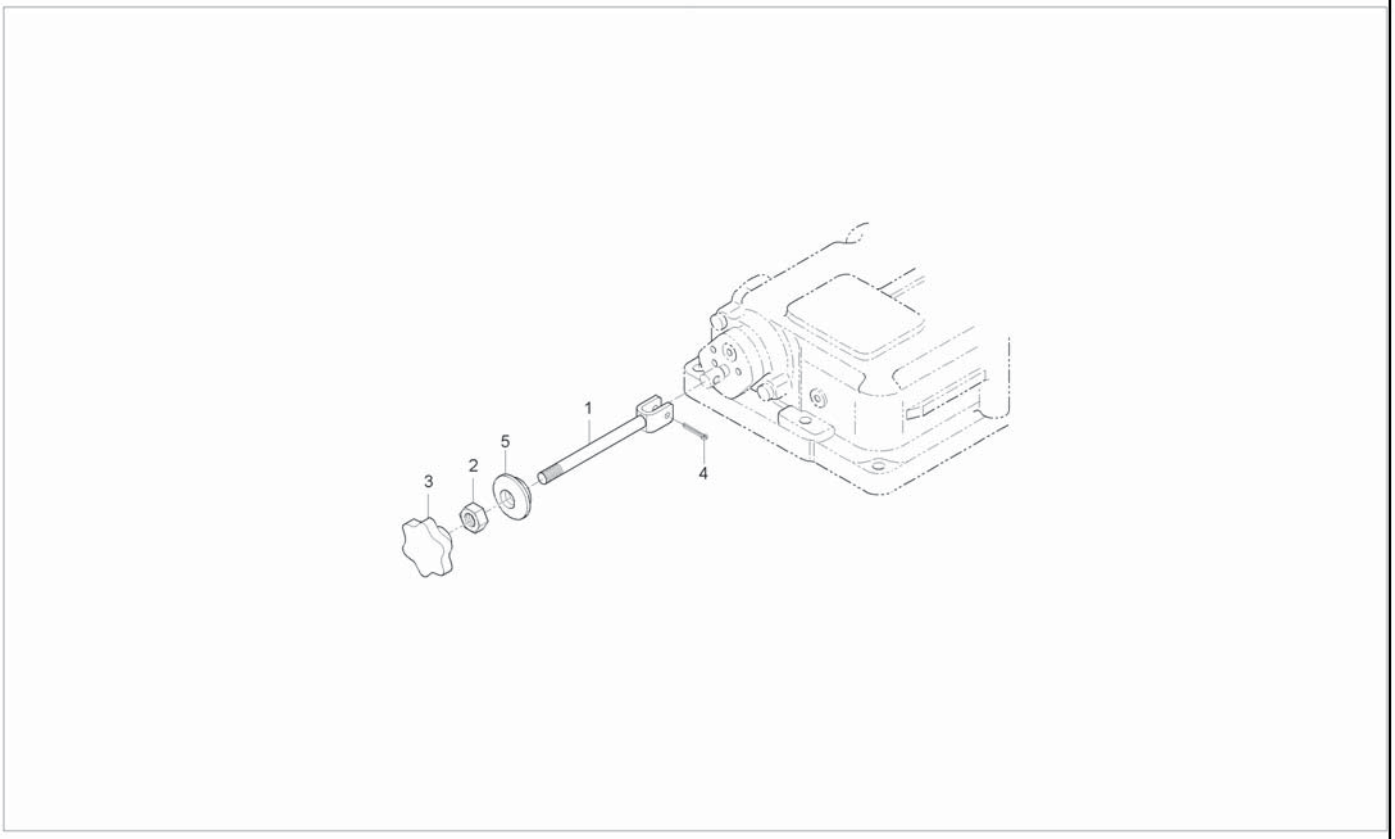

A : CK35-EU , B : CK35H-EU

No.	Part Number	Desciption	Q'TY					I.C	Remark
			A	B	C	D	E		
1	T2195-65371	ROD(MLS)	1	1					
2	02176-50100	NUT	1	1					M10X1.25
3	T2610-39882	GRIP	1	1					
4	05511-50320	PIN, SPLIT	1	1					M3.2*20
5	T4620-50592	RUBBER, CUSHION FR GRILL BRACKET	1	1					
5	31355-2949-1	GROMMET	1	1				<--->	

----> Old replace New
<-X-> Not interchangeable
<-O-> Interchangeable with another part(s)
<---- New replace Old
<---> Interchangeable

CK30M-T780-2A POSITION DRAFT CONTROL LEVER GROUP

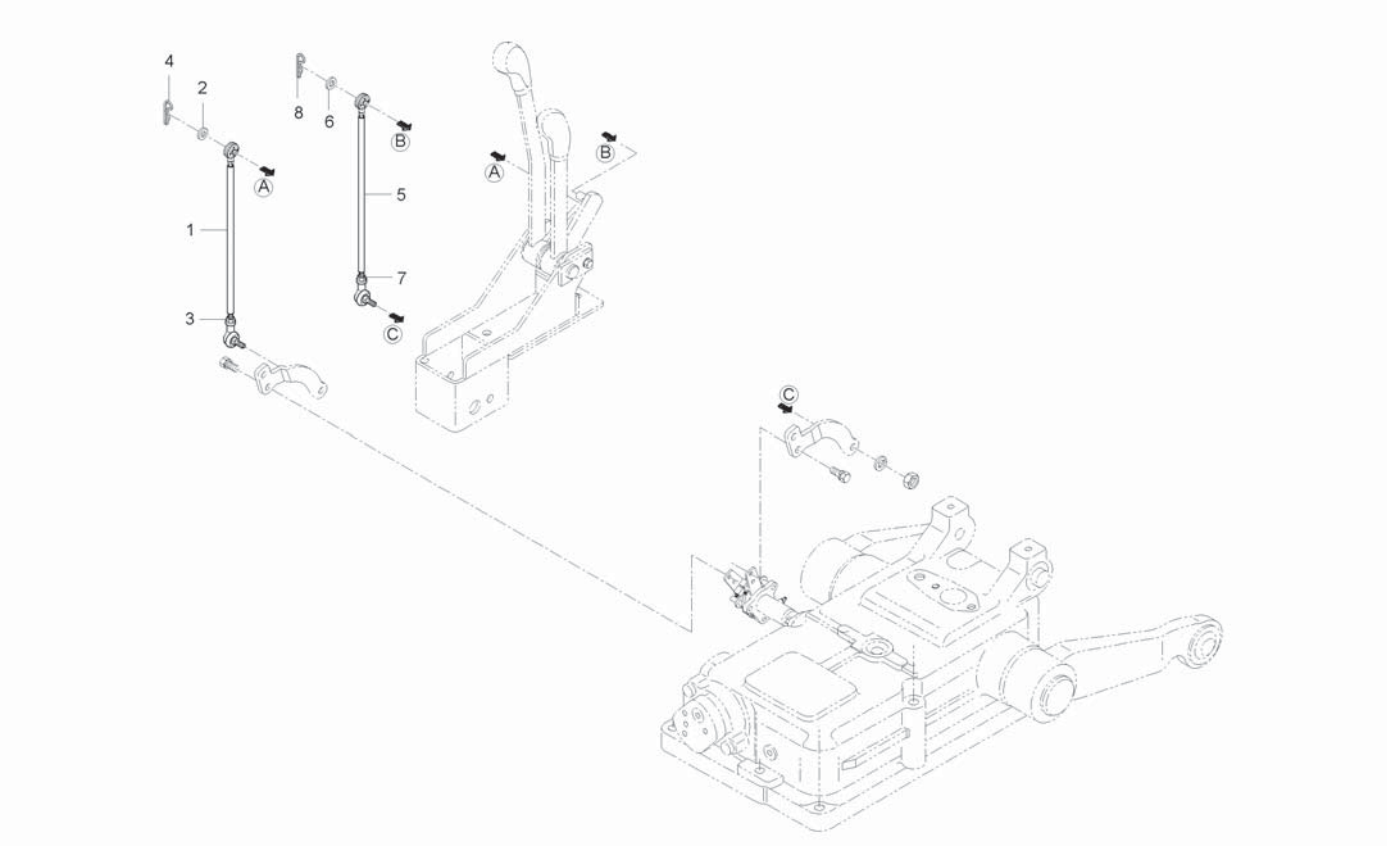

A : CK35-EU , B : CK35H-EU

No.	Part Number	Desciption	Q'TY A	Q'TY B	Q'TY C	Q'TY D	Q'TY E	I.C	Remark
1	T2185-65472	LEVER, 2	1	1					
2	04512-50060	WASHER, SPRING	1	1					M6
3	02056-50060	NUT	1	1					M6*P1.0
4	05515-50800	PIN, SNAP	1	1					M8
5	T2185-65472	LEVER, 2	1	1					
6	04512-50060	WASHER, SPRING	1	1					M6
7	02056-50060	NUT	1	1					M6*P1.0
8	05515-50800	PIN, SNAP	1	1					M8

----> Old replace New
<-X-> Not interchangeable
<-O-> Interchangeable with another part(s)
<---- New replace Old
<---> Interchangeable

CK30ME-T790A THREE POINT LINK SYSTEM 1GROUP

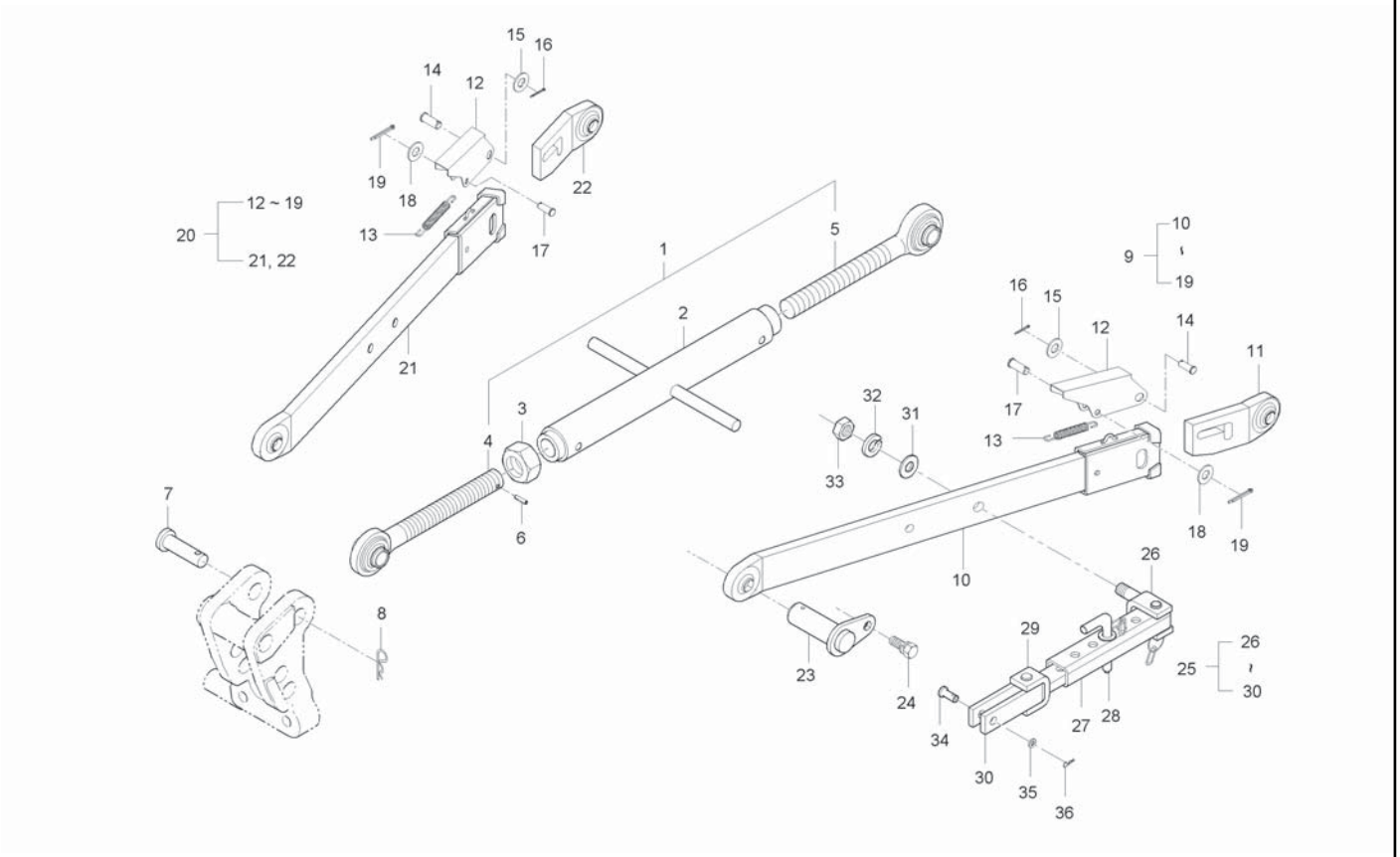

A : CK35-EU , B : CK35H-EU

No.	Part Number	Desciption	Q'TY A	Q'TY B	Q'TY C	Q'TY D	Q'TY E	I.C	Remark
1	T2350-71102	TOP LINK ASSY	1 ~HT8100038	1					
1	T2350-71102BB	TOP LINK ASSY	1 HT8100039~					<-X->	
1	T2350-71211	TOP-LINK ASSY	1	1				<--->	
2	T2350-71112	LINK, TOP	1	1					
3	T4620-85451	NUT	1	1					
3	32244-7118-1	NUT, TOP LINK	1	1				<--->	
4	32240-7122-4	TOP LINK JOINT, LH	1	1					
4	T2350-71231	TOP LINK JOINT, LH	1	1				<--->	
5	32240-7121-4	TOP LINK JOINT, RH	1	1					
5	T2350-71241	TOP LINK JOINT, RH	1	1				<--->	
6	05411-00422	PIN, SPRING	2	2					DIA4*22
7	T4620-85392	PIN, TOP LINK	1	1					
8	05515-51600	PIN, SNAP	1	1					
9	T2625-93012	LWR LINK ASSY, LH	1 ~GT8100064	1 ~GT8900058					
9	T2625-93013	LWR LINK ASSY, LH	1 GT8100065~	1 GT8900059~				<-X->	
10	T2625-93022	LWR LINK, LH	1 ~GT8100064	1 ~GT8900058					
10	T2625-93023	LWR LINK, LH	1 GT8100065~	1 GT8900059~				<-X->	
11	T2615-93031	HOUSING, LWR LINK LH	1	1					
12	T4680-93041	COVER, LWR	1	1					

----> Old replace New
<-X-> Not interchangeable
<-O-> Interchangeable with another part(s)
<---- New replace Old
<---> Interchangeable

CK30ME-T790A THREE POINT LINK SYSTEM 1GROUP

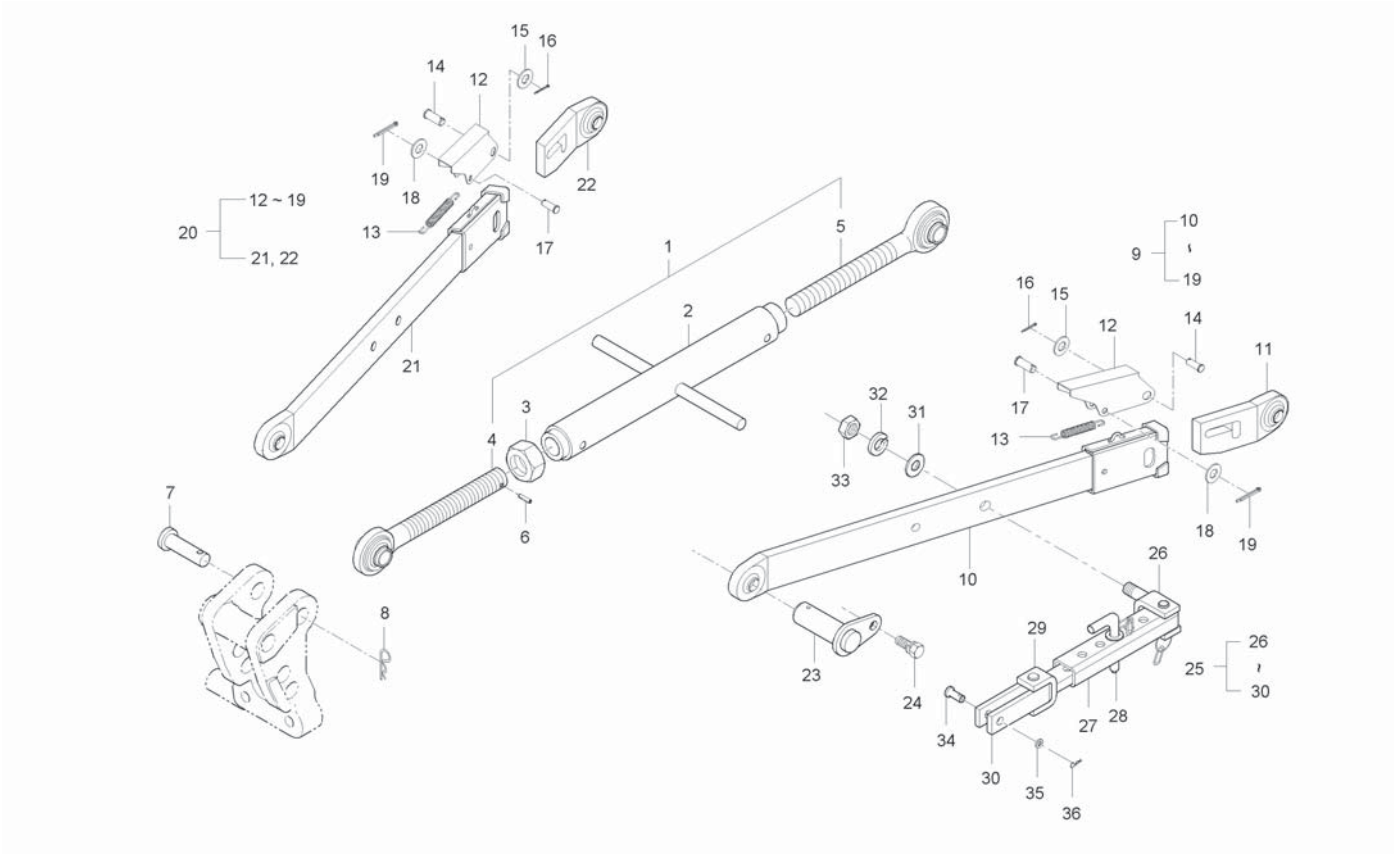

A : CK35-EU , B : CK35H-EU

No.	Part Number	Desciption	Q'TY A	Q'TY B	Q'TY C	Q'TY D	Q'TY E	I.C	Remark
13	T4850-93051	SPRING, LWR LINK	1	1					
14	T4680-93061	PIN, SUB LINK	1	1					
15	04011-50220	WASHER, PLAIN	1	1					M22
16	05511-50445	PIN, SPLIT	1	1					
17	05122-51250	JOINT PIN	1	1					
18	04011-50120	WASHER, PLAIN	1	1					M12
19	05511-50430	PIN, SPLIT	1	1					
20	T2625-93112	LWR LINK ASSY, RH	1 ~GT8100064	1 ~GT8900058					
20	T2625-93113	LWR LINK ASSY, RH	1 GT8100065~	1 GT8900059~				<-X->	
21	T2625-93122	LWR LINK, RH	1 ~GT8100064	1 ~GT8900058					
21	T2625-93123	LWR LINK, RH	1 GT8100065~	1 GT8900059~				<-X->	
22	T2615-93131	HOUSING, LWR LINK RH	1	1					
23	T2445-29822	PIN, LWR LINK RH	2	2					
24	01123-50816	BOLT, WASHER	2	2					M8*P1.25
25	T2625-91116	CHECK LINK ASSY	2 ~GT8100064	2 ~GT8900058					
25	T2625-91117	CHECK LINK ASSY	2 GT8100065~	2 GT8900059~				<-X->	
25	T2625-91118	CHECK LINK ASSY	1	1				<----	
26	T2615-91153	BRACKET ASSY, 3	1	1					
27	T2615-91142	HOUSING ASSY	1	1					

----> Old replace New
<-X-> Not interchangeable
<-O-> Interchangeable with another part(s)
<---- New replace Old
<---> Interchangeable

CK30ME-T790A

THREE POINT LINK SYSTEM 1GROUP

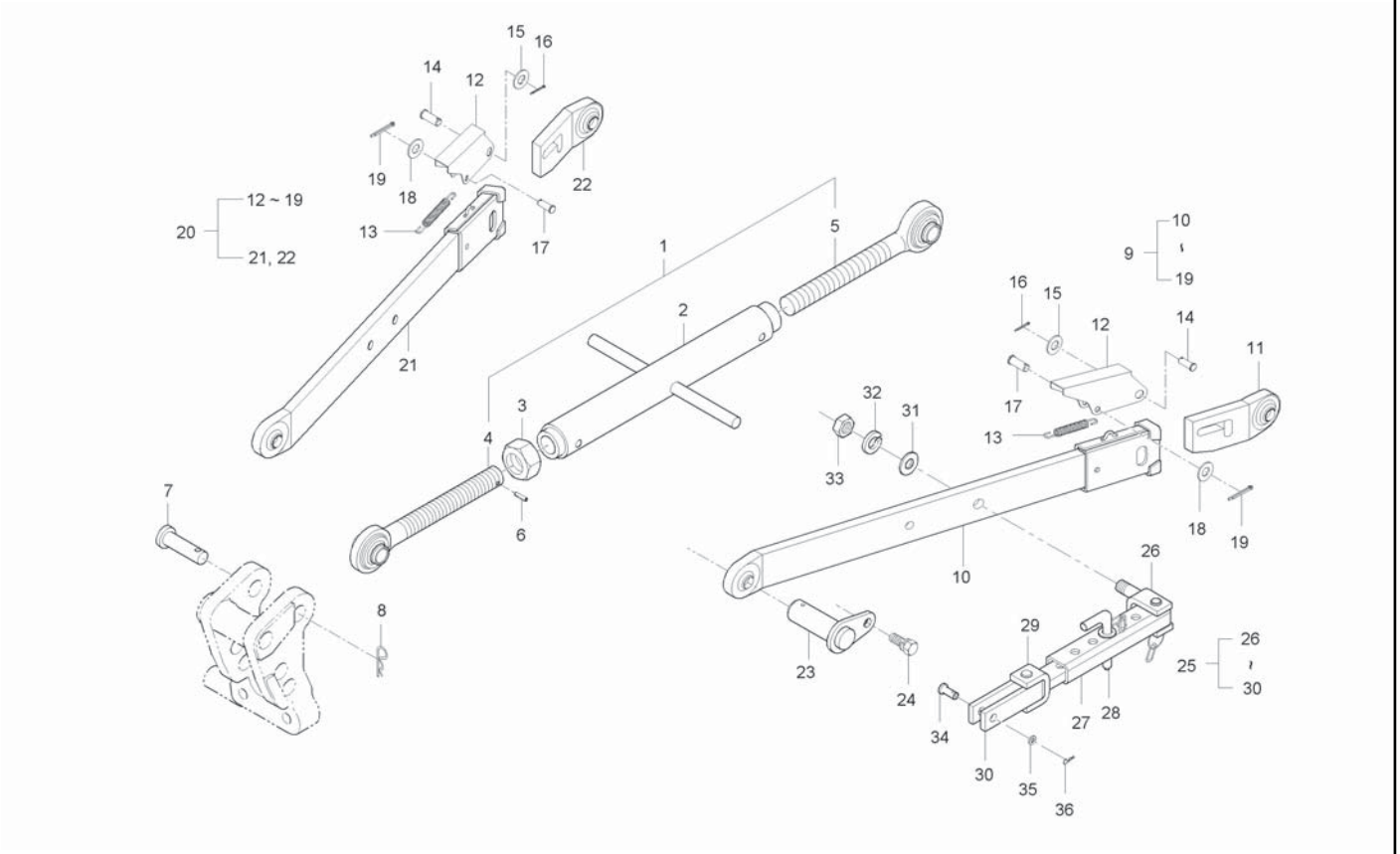

A : CK35-EU , B : CK35H-EU

No.	Part Number	Desciption	Q'TY A	Q'TY B	Q'TY C	Q'TY D	Q'TY E	I.C	Remark
27	T2615-91143	HOUSING ASSY	1	1				<----	
28	T4125-91161	HOOK ASSY	1 ~GT8100064	1 ~GT8900058					
28	T4125-91162	ASSY, HOLL	1 GT8100065~	1 GT8900059~				<-X->	
29	T2615-91133	BRACKET ASSY, 2	1	1					
30	T2625-91122	BRACKET ASSY, 1	1	1					
31	04014-50180	WASHER, PLAIN	2	2					
32	04512-50180	WASHER, SPRING	2	2					M18
33	02174-50180	NUT	2	2					M18*P1.5
34	32353-7189-3	PIN, CHECK CHAIN	2	2					
35	04013-50120	WASHER, PLAIN	2	2					M12
36	05515-51200	PIN, SNAP	2	2					DIA12

----> Old replace New
<-X-> Not interchangeable
<-O-> Interchangeable with another part(s)
<---- New replace Old
<---> Interchangeable

CK30E-T795A THREE POINT LINK SYSTEM 2GROUP

(CK35-EU : HT8100017 ~ , CK35H-EU : HT8900027 ~)

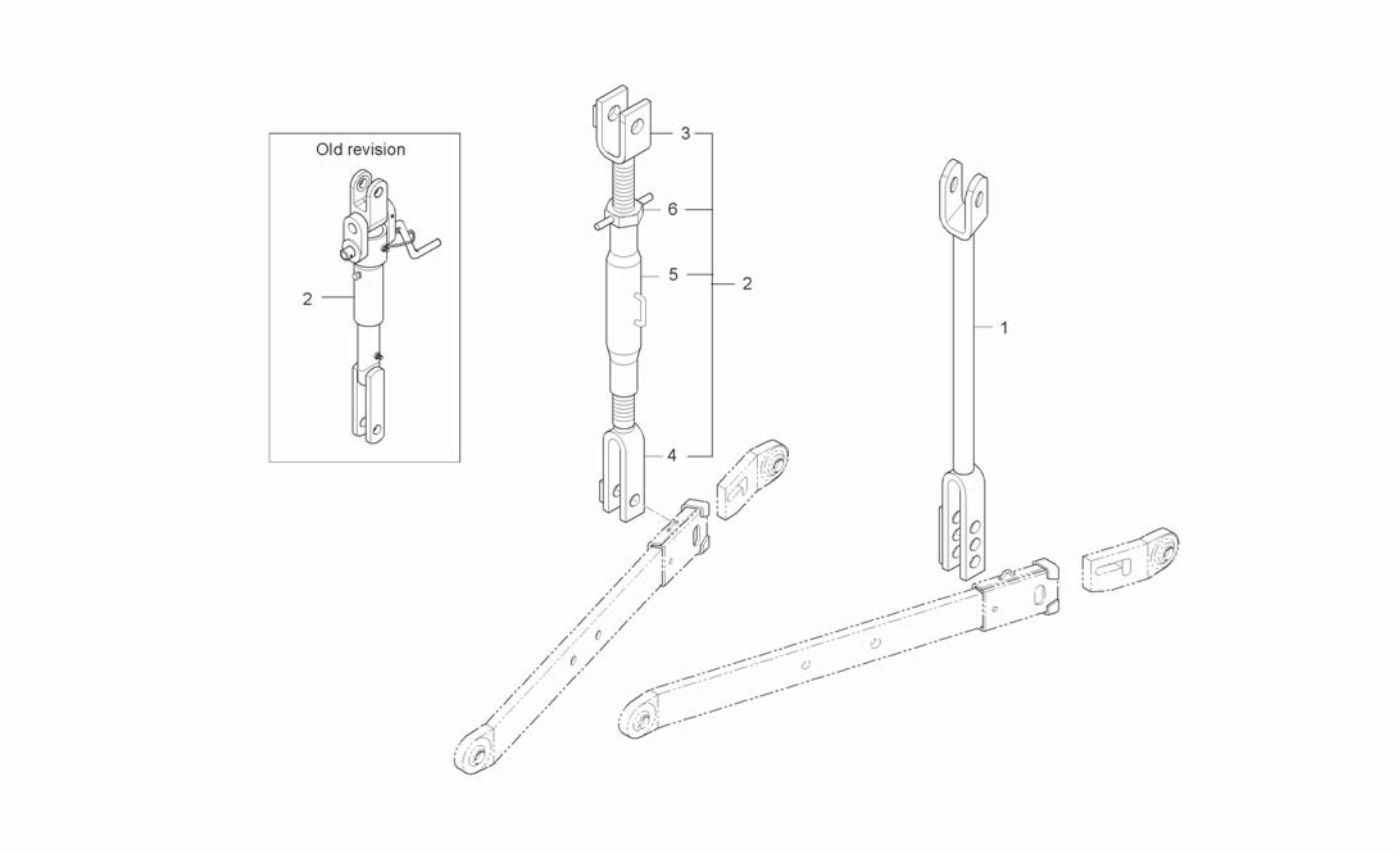

A : CK35-EU , B : CK35H-EU

No.	Part Number	Desciption	Q'TY A	Q'TY B	Q'TY C	Q'TY D	Q'TY E	I.C	Remark
1	T2185-71513	LIFT ROD ASSY, LH	1	1					
2	T2630-85411	LIFT ROD ASSY, RH	1	1					
3	T2630-85421	ROD, LIFT UPR	1	1					
4	T2630-85431	ROD, LIFT LWR	1	1					
5	T2630-85441	ROD, LIFT BODY	1	1					
6	T4620-85451	NUT	1	1					

----> Old replace New
<-X-> Not interchangeable
<-O-> Interchangeable with another part(s)
<---- New replace Old
<---> Interchangeable

CK30M-T795A THREE POINT LINK SYSTEM 2GROUP

(CK35-EU : ~ HT8100016, CK35H-EU : ~ HT8900026)

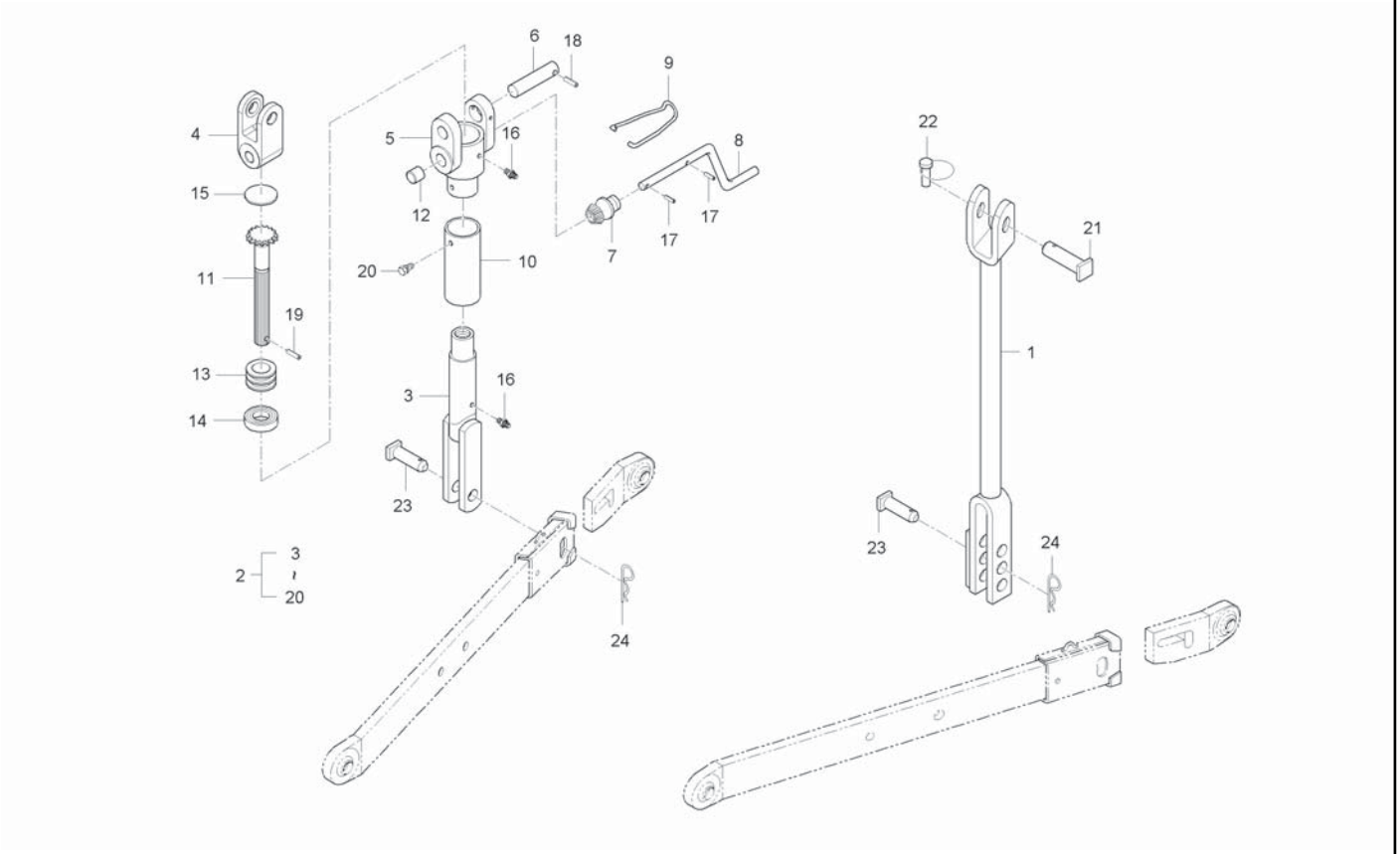

A : CK35-EU , B : CK35H-EU

No.	Part Number	Desciption	Q'TY A	Q'TY B	Q'TY C	Q'TY D	Q'TY E	I.C	Remark
1	T2185-71513	LIFT ROD ASSY, LH	1 ~HT8100038	1 ~HT8900076					
1	T2185-71513BB	LIFT ROD ASSY, LH	1 HT8100039~	1 JT8900001~				<-X->	
2	T2185-71613	LIFT ROD ASSY, RH	1 ~HT8100038	1 ~HT8900076					
2	T2185-71613BB	LIFT ROD ASSY, RH	1 HT8100039~	1 JT8900001~				<-X->	
3	T2185-71621	ROD, LIFT LWR	1	1					
4	T2185-71631	JOINT, LIFT ROD	1	1					
5	T2185-71641	CASE, LIFT ROD GEAR	1	1					
6	T2185-71651	PIN, LIFT ROD	1	1					
7	T2185-71661	GEAR 2, LIFT ROD ADJUSTMENT	1	1					
8	T4340-71661	HANDLE	1	1					
9	T2185-71671	SUPPORT, HANDLE	1	1					
10	T4340-71701	TUBE	1	1					
11	T2185-71691	GEAR 1, LIFT ROD ADJUST	1	1					
12	32244-7167-1	COLLAR	1	1					
13	31220-7172-1	SHIM	3	3					
14	32294-7177-1	BEARING,THRUST BALL	1	1					
15	06311-75045	PLUG	1	1					T2*48*48
16	06613-10675	GREASE NIPPLE	2	2					M6XP0.75
17	05411-00622	PIN, SPRING	2	2					

----> Old replace New
<-X-> Not interchangeable
<-O-> Interchangeable with another part(s)
<---- New replace Old
<---> Interchangeable

CK30M-T795A

THREE POINT LINK SYSTEM 2GROUP

(CK35-EU : ~ HT8100016, CK35H-EU : ~ HT8900026)

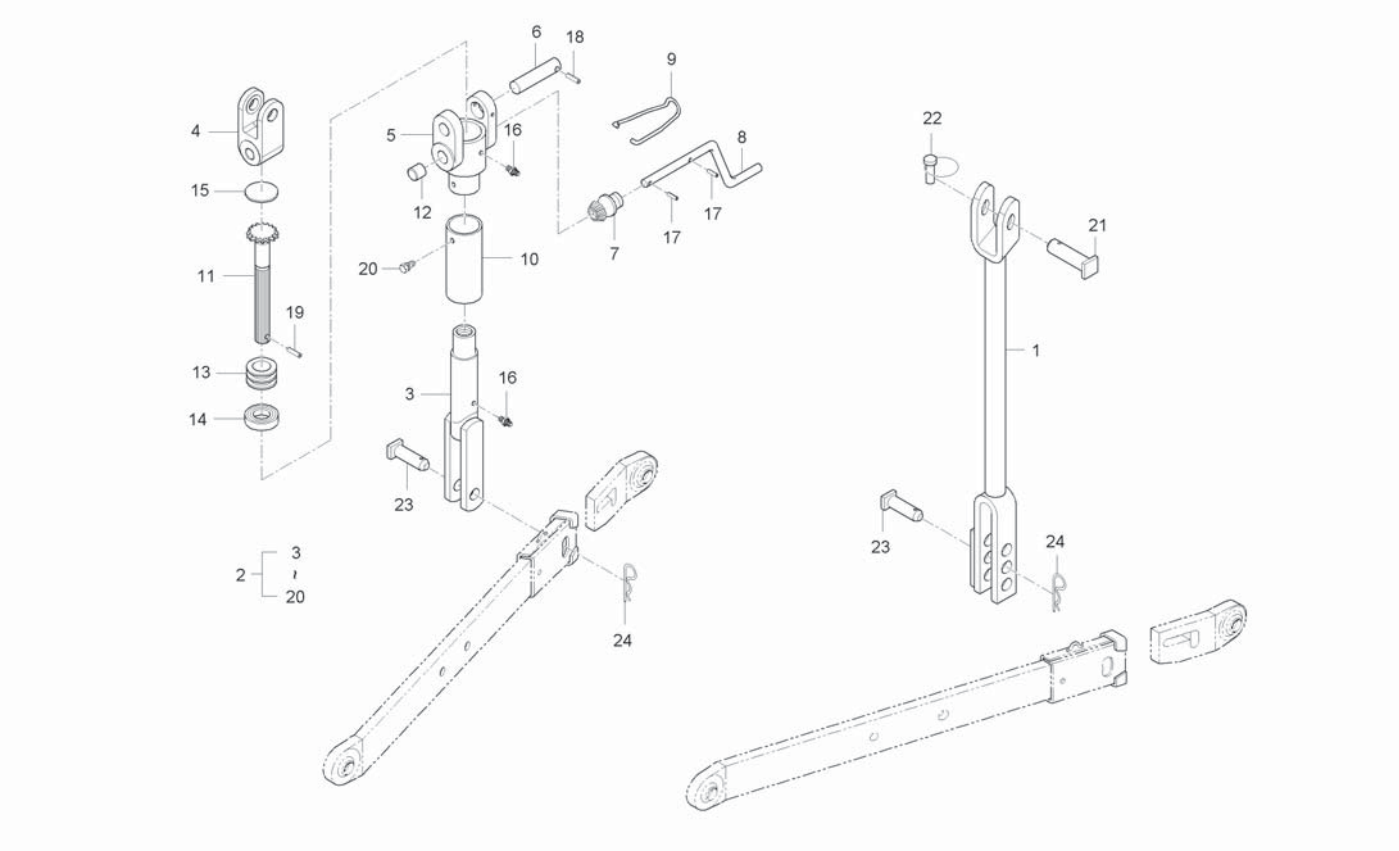

A : CK35-EU , B : CK35H-EU

No.	Part Number	Desciption	Q'TY A	Q'TY B	Q'TY C	Q'TY D	Q'TY E	I.C	Remark
18	05411-00532	PIN, SPRING	1	1					
19	05411-00420	PIN, SPRING	1	1					
20	01202-50612	BOLT, WASHER	1	1					
21	T4620-85471	PIN, LIFT ROD UPR	2	2					
22	34150-3764-4	PIN,CLIP	2	2					
23	34354-7158-3	PIN	2	2					
24	05515-51600	PIN, SNAP	2	2					

----> Old replace New
<-X-> Not interchangeable
<-O-> Interchangeable with another part(s)
<---- New replace Old
<---> Interchangeable

CK30ME-T805A

SWING DRAWBAR GROUP

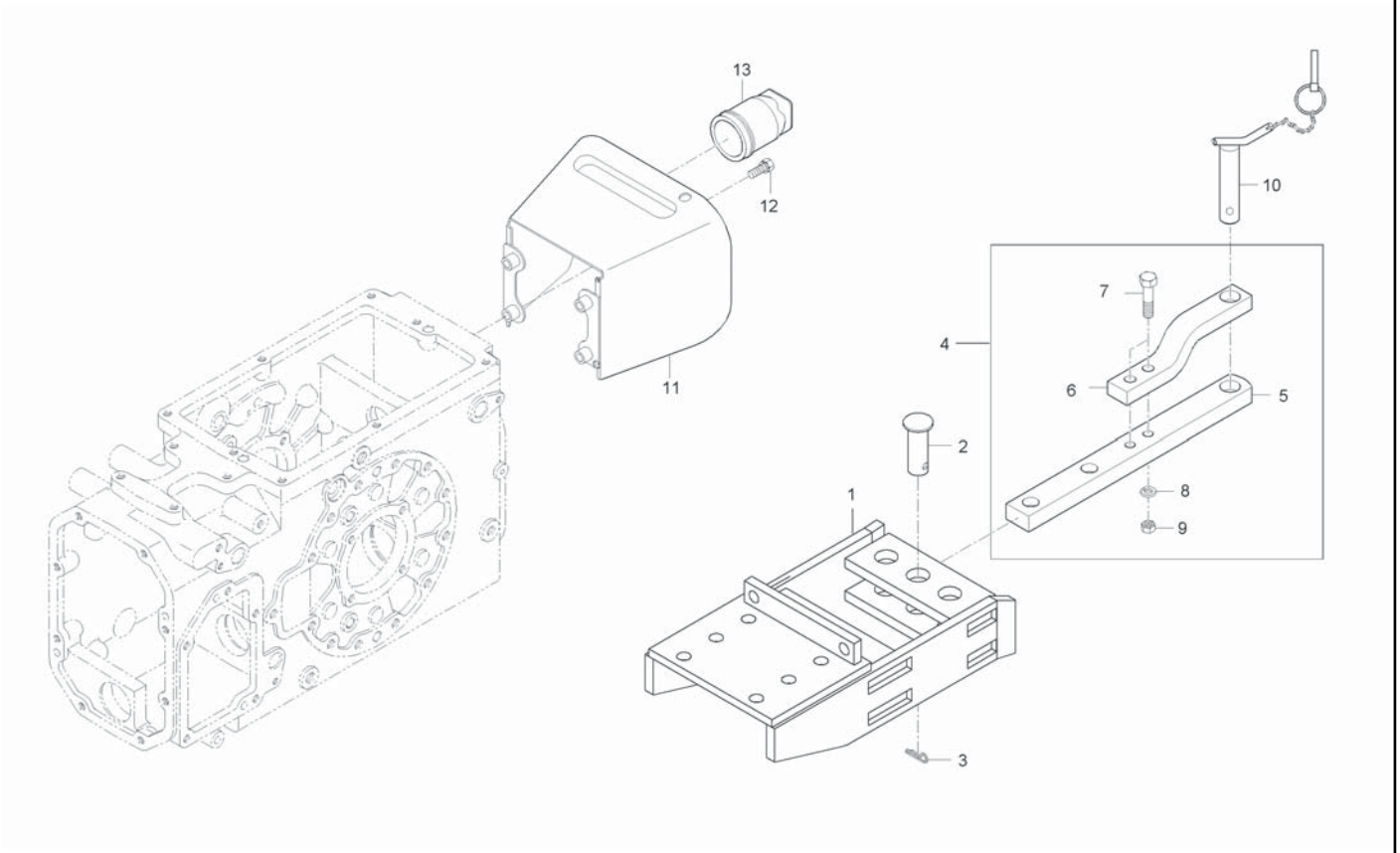

A : CK35-EU , B : CK35H-EU

No.	Part Number	Desciption	Q'TY A	Q'TY B	Q'TY C	Q'TY D	Q'TY E	I.C	Remark
1	T2185-29813	FRAME, SWING DRAW BAR	1 ~HT8100038	1 ~HT8900076					
2	T2445-29781	JOINT PIN	2	2					
3	70515-1633-4	PIN, SNAP	2	2					
4	T2611-29821	SWING DRAWBER ASSY	1	1					
4	T2611-29822	SWING DRAWBER ASSY	1	1				<----	
5	T2611-29831	DRAW BAR	1	1					
6	T2611-29841	BRACKET	1	1					
7	01176-51675	BOLT	2	2					M16*75*9T
8	04512-50160	WASHER, SPRING	2	2					M16
9	02076-50160	NUT	2	2					
10	T2611-29852	PIN, CONNECTING	1	1					
11	T2181-25491	COVER, PTO PROTECT	1	1					
12	01133-51032	BOLT, WASHER	4	4					M10*P1.25
13	T2181-25441	COVER, PTO	1	1					
13	T2181-25442	COVER, PTO	1	1				<----	

----> Old replace New
<-X-> Not interchangeable
<-O-> Interchangeable with another part(s)
<---- New replace Old
<---> Interchangeable

CK30M-T810A

BONNET 1 GROUP

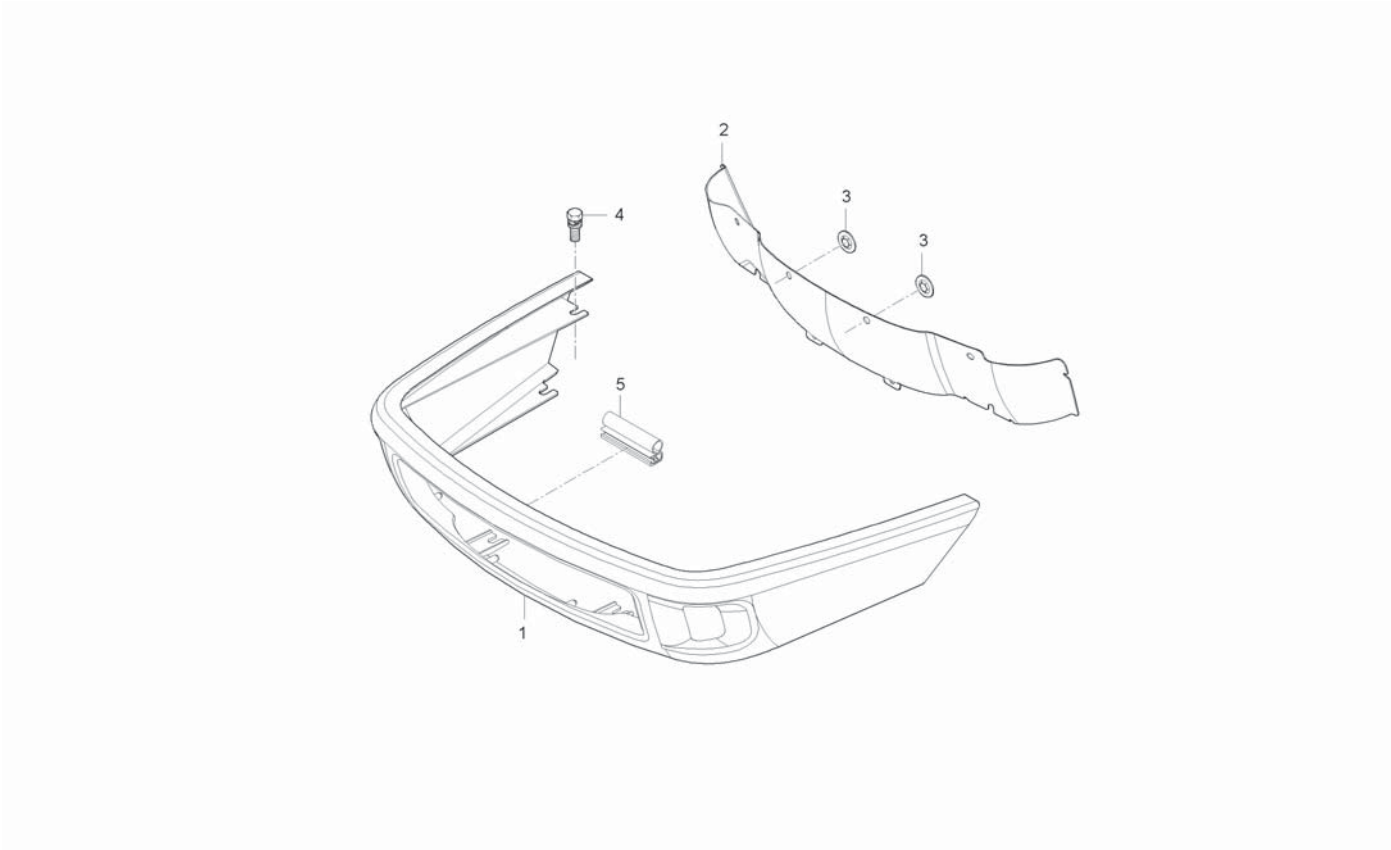

A : CK35-EU , B : CK35H-EU

No.	Part Number	Desciption	Q'TY A	Q'TY B	Q'TY C	Q'TY D	Q'TY E	I.C	Remark
1	T2185-50802	GRILL, FRONT	1 ~HT8100038	1 ~HT8900076					
1	T2185-50802BB	GRILL, FRONT	1 HT8100039~	1 JT8900001~				<-X->	
2	T2185-50811	NET, FRONT GRILL	1 ~HT8100038	1 ~HT8900076					
2	T2185-50811BB	NET, FRONT GRILL	1 HT8100039~	1 JT8900001~				<-X->	
3	T4620-50701	MOUNTING PLATE	8	8					
4	01025-50620	BOLT, WASHER	6	6					M6*P1.0
4	01025-50616	BOLT, WASHER	6	6				<----	M6*P1
5	T2185-50902	RUBBER, FRONT GRILL	1	1					

----> Old replace New
<-X-> Not interchangeable
<-O-> Interchangeable with another part(s)
<---- New replace Old
<---> Interchangeable

CK30M-T820A

BONNET 2 GROUP

(CK35-EU : ~ FT8100016)

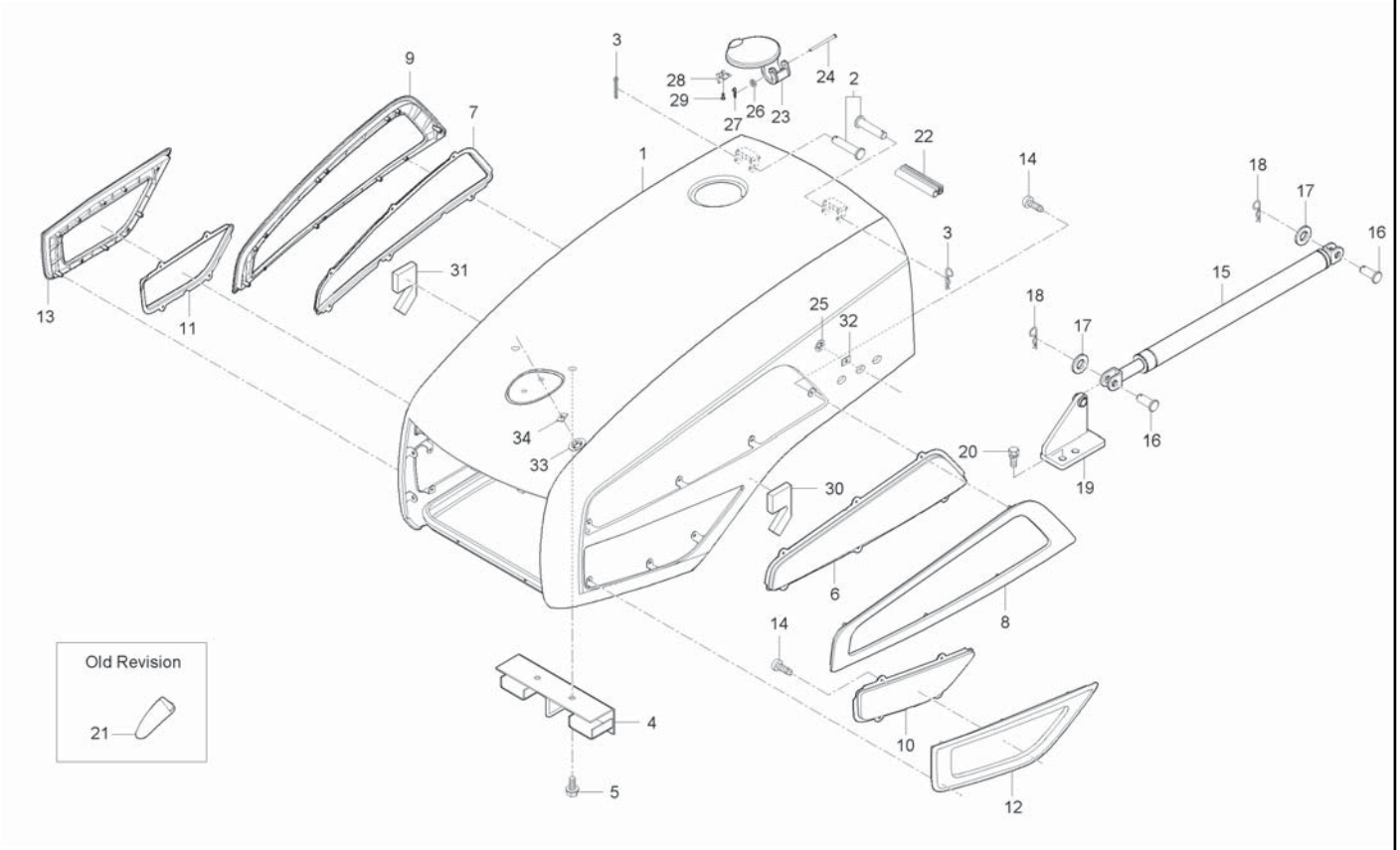

A : CK35-EU , B : CK35H-EU

No.	Part Number	Desciption	Q'TY A	Q'TY B	Q'TY C	Q'TY D	Q'TY E	I.C	Remark
1	T2185-50706	BONNET ASSY	1						
2	05122-51050	JOINT PIN	2						
3	05515-51000	CIR CLIP	2						
4	T2185-50612	HOLDER, BONNET	1						
5	01774-51020	BOLT, FLANGE	2						
6	T2185-51111	NET 1, LH	1 ~HT8100038						
6	T2185-51111BB	NET 1, LH	1 HT8100039~					<-X->	
7	T2185-51121	NET 1, RH	1 ~HT8100038						
7	T2185-51121BB	NET 1, RH	1 HT8100039~					<-X->	
8	T2185-51132	GRILL 1, LH	1 ~HT8100038						
8	T2185-51132BB	GRILL 1, LH	1 HT8100039~					<-X->	
9	T2185-51142	GRILL 1, RH	1 ~HT8100038						
9	T2185-51142BB	GRILL 1, RH	1 HT8100039~					<-X->	
10	T2185-51151	NET 2, LH	1 ~HT8100038						
10	T2185-51151BB	NET 2, LH	1 HT8100039~					<-X->	
11	T2185-51161	NET 2, RH	1 ~HT8100038						
11	T2185-51161BB	NET 2, RH	1 HT8100039~					<-X->	
12	T2185-51172	GRILL 2, LH	1 ~HT8100038						
12	T2185-51172BB	GRILL 2, LH	1 HT8100039~					<-X->	

----> Old replace New
<-X-> Not interchangeable
<-O-> Interchangeable with another part(s)
<---- New replace Old
<---> Interchangeable

CK30M-T820A

BONNET 2 GROUP

(CK35-EU : ~ FT8100016)

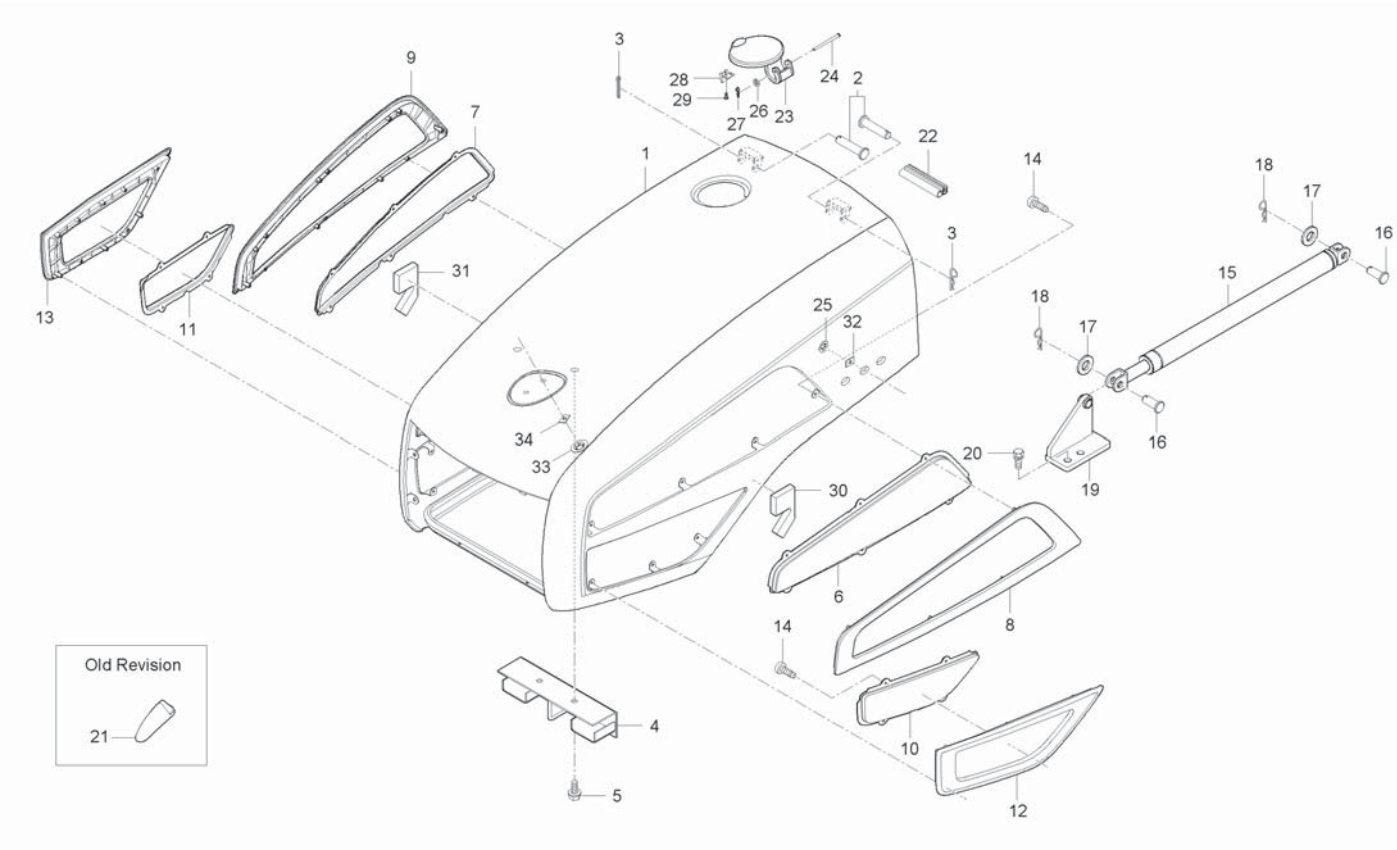

A : CK35-EU , B : CK35H-EU

No.	Part Number	Desciption	Q'TY A	Q'TY B	Q'TY C	Q'TY D	Q'TY E	I.C	Remark
13	T2185-51182	GRILL 2, RH	1 ~HT8100038						
13	T2185-51182BB	GRILL 2, RH	1 HT8100039~					<-X->	
14	38430-1827-1	SCREW	48						
15	T2185-50911	CYLINDER ASSY	1						
16	05122-51025	JOINT PIN	2						
17	04013-50100	WASHER, PLAIN	2						
18	05515-51000	CIR CLIP	2						
19	T2185-50921	SUPPORT, CYLINDER	1 ~HT8100038						
19	T2185-50921ED	SUPPORT, CYLINDER	1 HT8100039~					<-X->	
20	01123-50816	BOLT, WASHER	2						
21	T2330-50471	MASCOT	1						
22	T2185-52102	RUBBER, FRAME	1						
23	T2185-50641	COVER, FUEL	1						
24	05122-50645	JOINT PIN	1						
25	T4620-50701	MOUNTING PLATE	6						
26	04013-50060	WASHER, PLAIN	1						
27	05525-50060	PIN, SNAP	1						
28	T2185-50651	CLIP	1						
29	38430-1827-1	SCREW	2						

----> Old replace New
<-X-> Not interchangeable
<-O-> Interchangeable with another part(s)
<---- New replace Old
<---> Interchangeable

CK30M-T820A

BONNET 2 GROUP

(CK35-EU : ~ FT8100016)

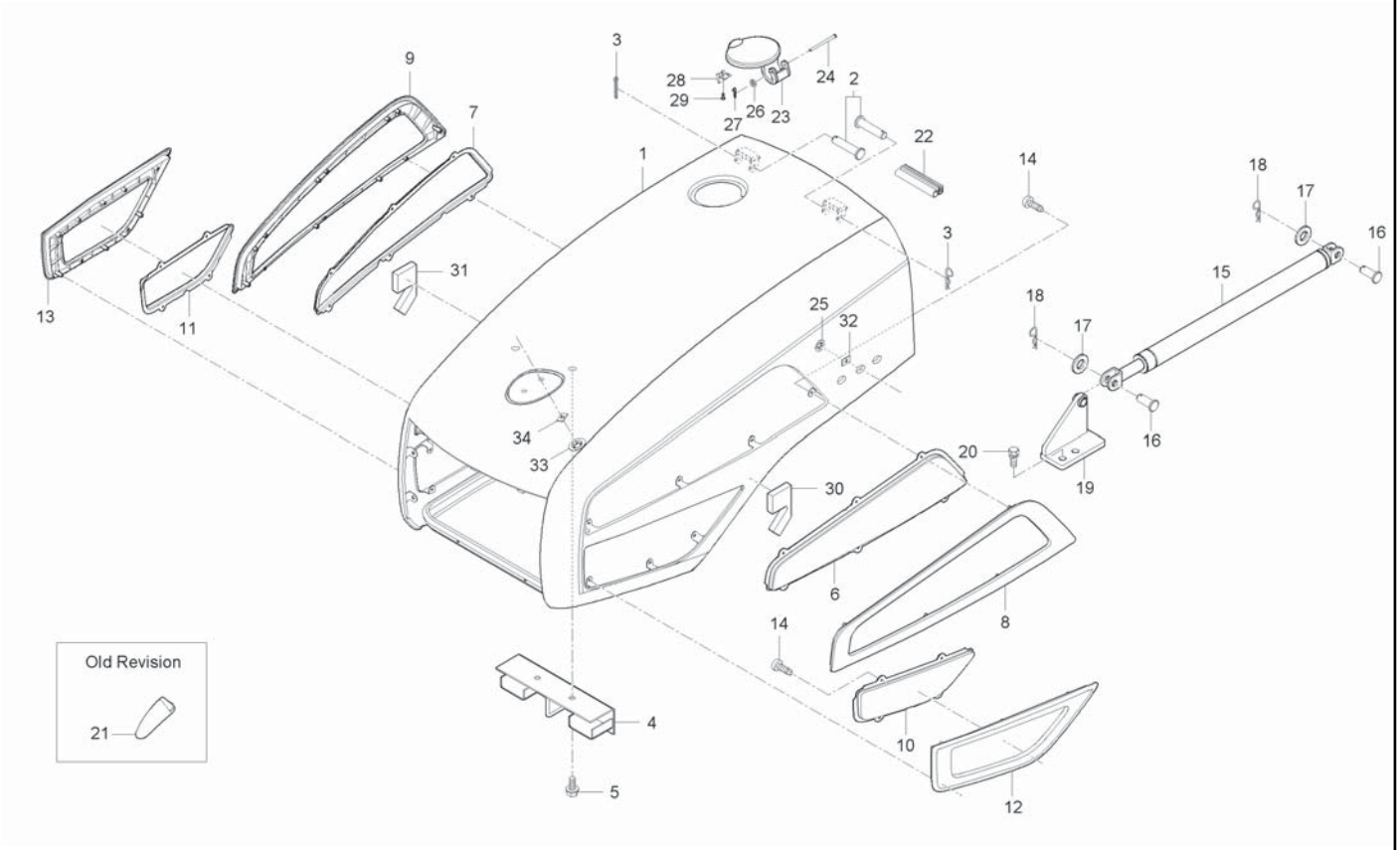

A : CK35-EU , B : CK35H-EU

No.	Part Number	Desciption	Q'TY A	B	C	D	E	I.C	Remark
30	T2185-50952	SPONGE, BONNET LH	1						
31	T2185-50962	SPONGE, BONNET RH	1						
32	82KC-0641	PLATE,RUBBER	6						
33	T4620-50701	MOUNTING PLATE	2						
34	82KC-0641	PLATE,RUBBER	2						

----> Old replace New
<-X-> Not interchangeable
<-O-> Interchangeable with another part(s)
<---- New replace Old
<---> Interchangeable

CK35-T820A

BONNET 2 GROUP

(CK35-EU : GT8100001 ~)

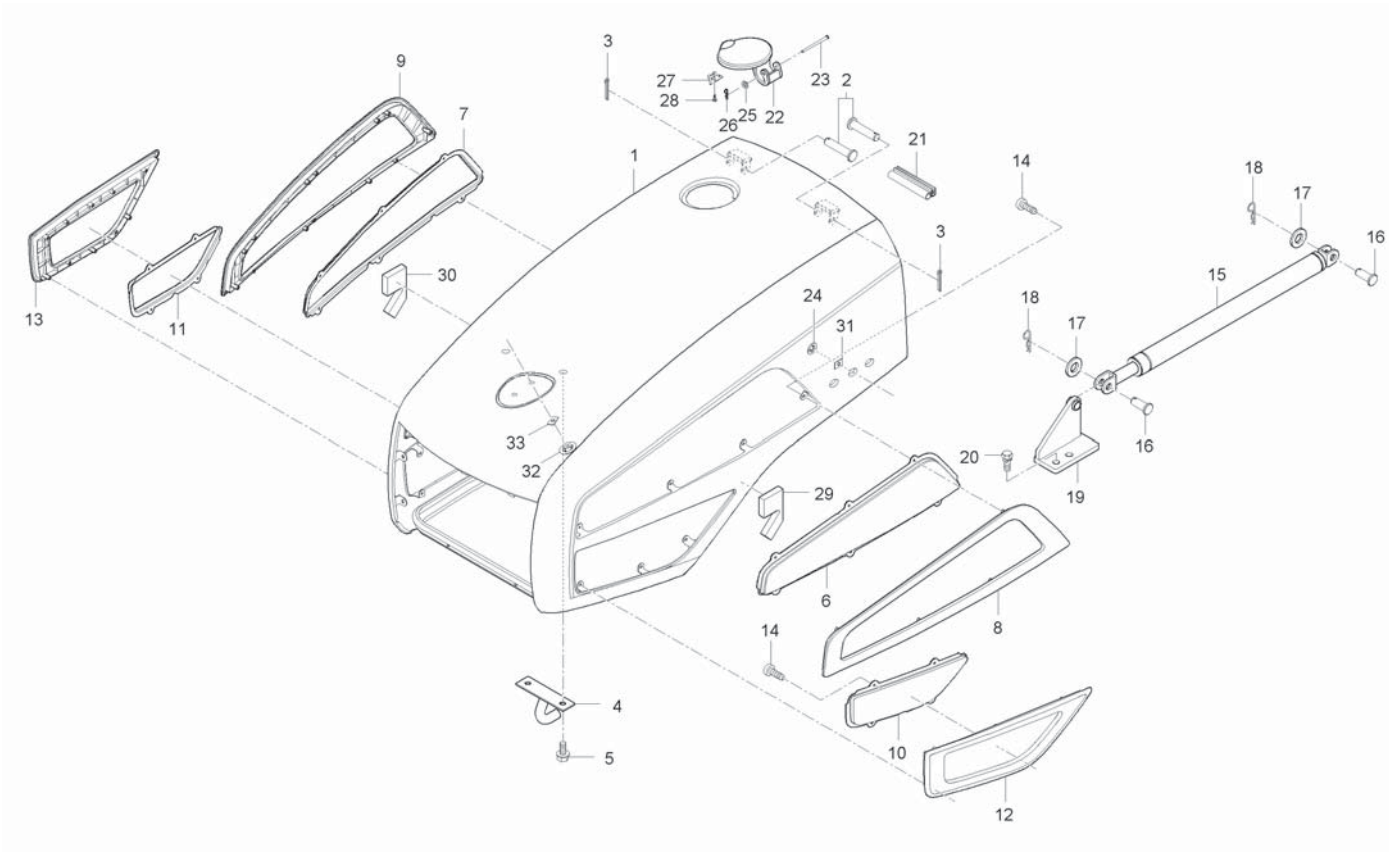

A : CK35-EU , B : CK35H-EU

No.	Part Number	Desciption	Q'TY A	Q'TY B	Q'TY C	Q'TY D	Q'TY E	I.C	Remark
1	T2185-50706	BONNET ASSY	1	1					
1	T2185-50707	BONNET ASSY	1	1				<----	
2	05122-51050	JOINT PIN	2	2					
3	05515-51000	CIR CLIP	2	2					
4	T2155-50611	HOLDER, BONNET	1	1					
4	T2155-50612	HOLDER, BONNET	1	1				<----	
4	T2155-50613	HOLDER, BONNET	1	1				<-X->	
5	01774-51020	BOLT, FLANGE	2	2					M10P1.25
6	T2185-51111	NET 1, LH	1 ~HT8100038	1 ~HT8900076					
6	T2185-51111BB	NET 1, LH	1 HT8100039~	1 JT8900001~				<-X->	
7	T2185-51121	NET 1, RH	1 ~HT8100038	1 ~HT8900076					
7	T2185-51121BB	NET 1, RH	1 HT8100039~	1 JT8900001~				<-X->	
8	T2185-51132	GRILL 1, LH	1 ~HT8100038	1 ~HT8900076					
8	T2185-51132BB	GRILL 1, LH	1 HT8100039~	1 JT8900001~				<-X->	
9	T2185-51142	GRILL 1, RH	1 ~HT8100038	1 ~HT8900076					
9	T2185-51142BB	GRILL 1, RH	1 HT8100039~	1 JT8900001~				<-X->	
10	T2185-51151	NET 2, LH	1 ~HT8100038	1 ~HT8900076					
10	T2185-51151BB	NET 2, LH	1 HT8100039~	1 JT8900001~				<-X->	
11	T2185-51161	NET 2, RH	1 ~HT8100038	1 ~HT8900076					

----> Old replace New
<-X-> Not interchangeable
<-O-> Interchangeable with another part(s)
<---- New replace Old
<---> Interchangeable

CK35-T820A

BONNET 2 GROUP

(CK35-EU : GT8100001 ~)

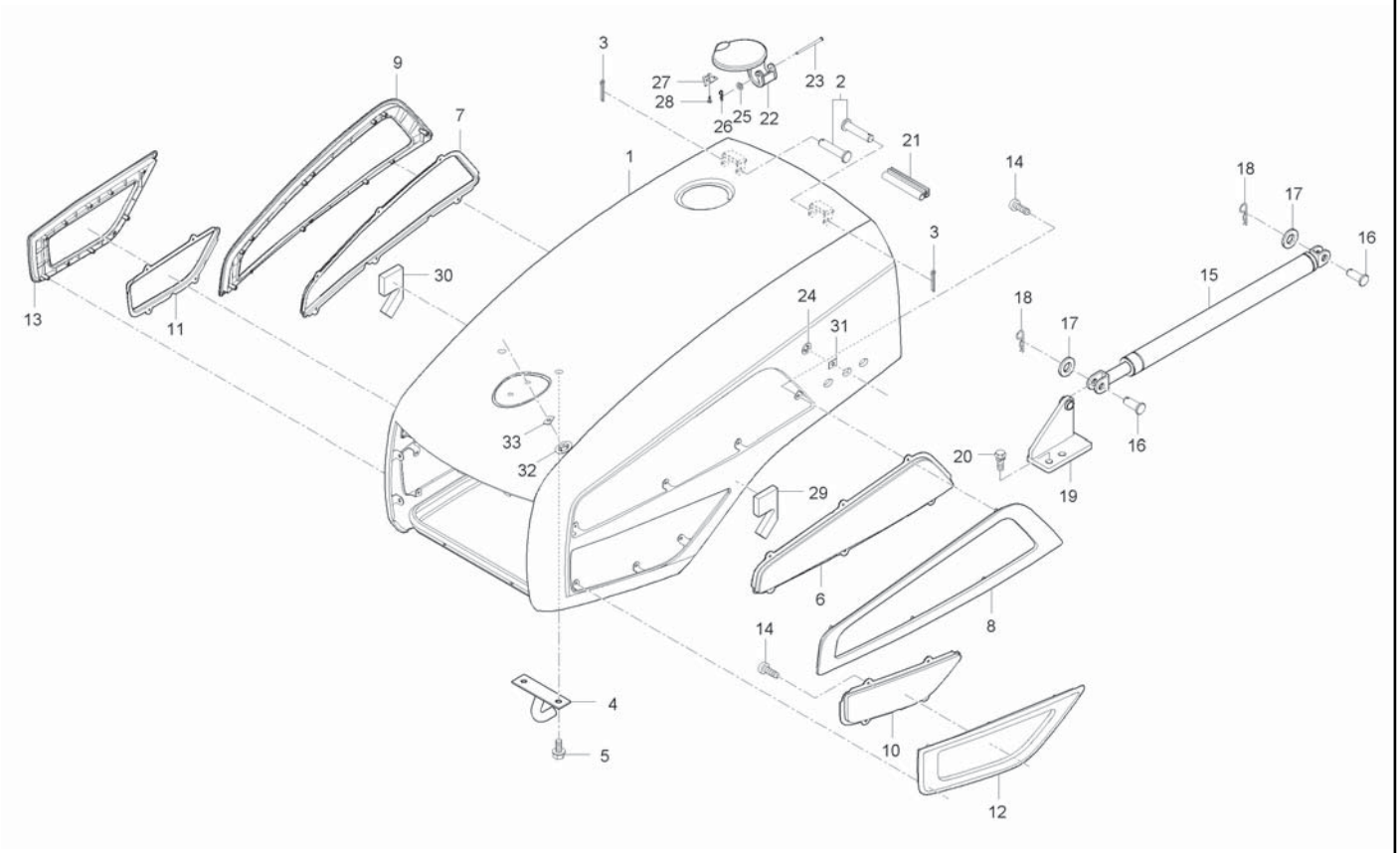

A : CK35-EU , B : CK35H-EU

No.	Part Number	Desciption	Q'TY A	Q'TY B	Q'TY C	Q'TY D	Q'TY E	I.C	Remark
11	T2185-51161BB	NET 2, RH	1 HT8100039~	1 JT8900001~				<-X->	
12	T2185-51172	GRILL 2, LH	1 ~HT8100038	1 ~HT8900076					
12	T2185-51172BB	GRILL 2, LH	1 HT8100039~	1 JT8900001~				<-X->	
13	T2185-51182	GRILL 2, RH	1 ~HT8100038	1 ~HT8900076					
13	T2185-51182BB	GRILL 2, RH	1 HT8100039~	1 JT8900001~				<-X->	
14	38430-1827-1	SCREW	48	48					
15	T2185-50911	CYLINDER ASSY	1	1					
16	05122-51025	JOINT PIN	2	2					DIA10*25
17	04013-50100	WASHER, PLAIN	2	2					M10
18	05515-51000	CIR CLIP	2	2					
19	T2185-50921	SUPPORT, CYLINDER	1 ~HT8100038	1 ~HT8900076					
19	T2185-50921ED	SUPPORT, CYLINDER	1 HT8100039~	1 JT8900001~				<-X->	
20	01123-50816	BOLT, WASHER	2	2					M8*P1.25
21	T2185-52102	RUBBER, FRAME	1	1					
22	T2185-50641	COVER, FUEL	1	1					
23	05122-50645	JOINT PIN	1	1					
24	T4620-50701	MOUNTING PLATE	6	6					
25	04013-50060	WASHER, PLAIN	1	1					M6
26	05525-50060	PIN, SNAP	1	1					

----> Old replace New
<-X-> Not interchangeable
<-O-> Interchangeable with another part(s)
<---- New replace Old
<---> Interchangeable

CK35-T820A

BONNET 2 GROUP

(CK35-EU : GT8100001 ~)

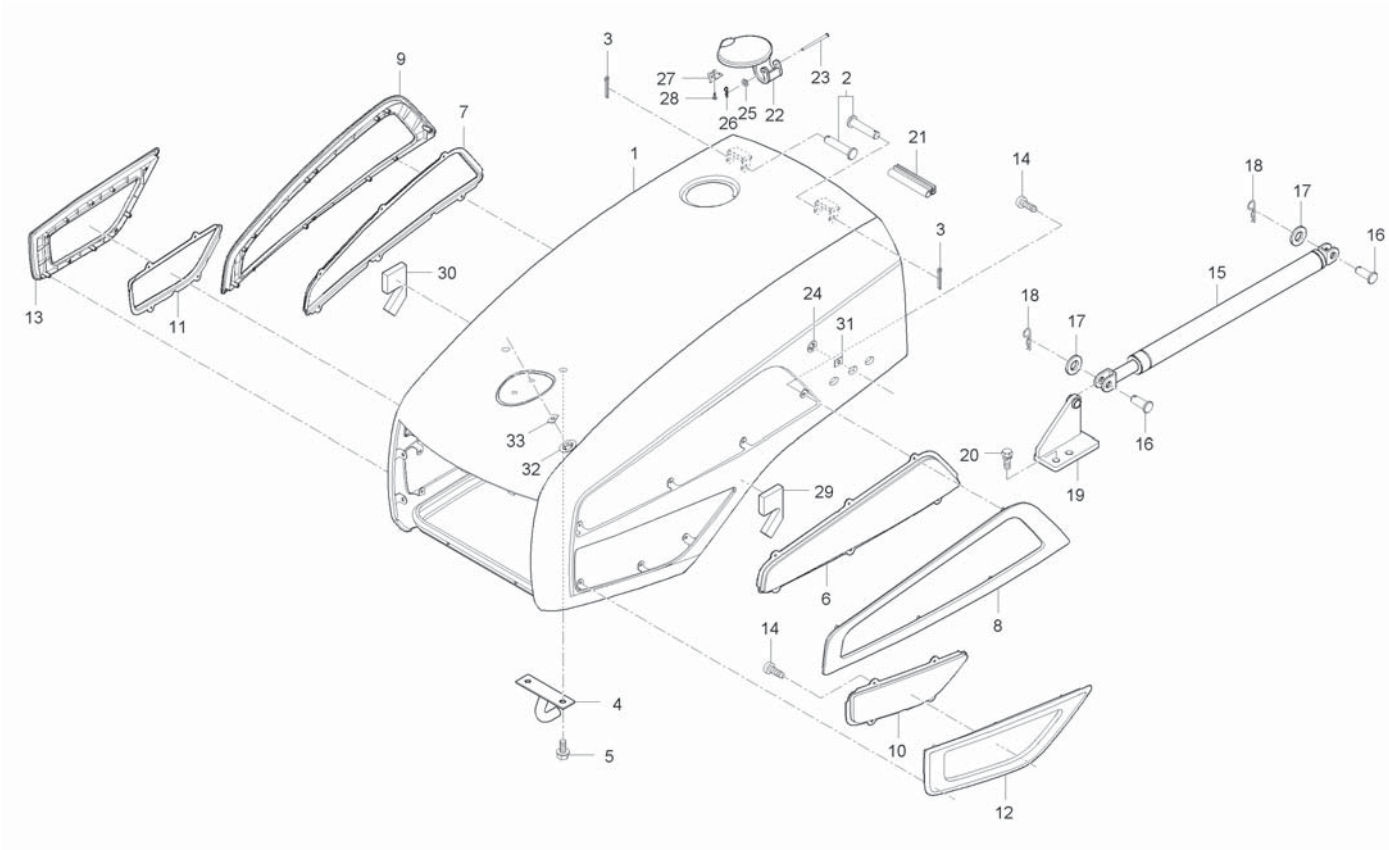

A : CK35-EU , B : CK35H-EU

No.	Part Number	Desciption	Q'TY A	Q'TY B	Q'TY C	Q'TY D	Q'TY E	I.C	Remark
27	T2185-50651	CLIP	1	1					
28	38430-1827-1	SCREW	2	2					
29	T2185-50952	SPONGE, BONNET LH	1	1					
29	T2185-50953	SPONGE, BONNET LH	1	1				<----	
30	T2185-50962	SPONGE, BONNET RH	1	1					
30	T2185-50963	SPONGE, BONNET RH	1	1				<----	
31	82KC-0641	PLATE,RUBBER	6	6					
32	T4620-50701	MOUNTING PLATE	2	2					
33	82KC-0641	PLATE,RUBBER	2	2					

----> Old replace New
<-X-> Not interchangeable
<-O-> Interchangeable with another part(s)
<---- New replace Old
<---> Interchangeable

CK30M-T830A

BONNET 3 GROUP

(CK35-EU : ~ FT8100016)

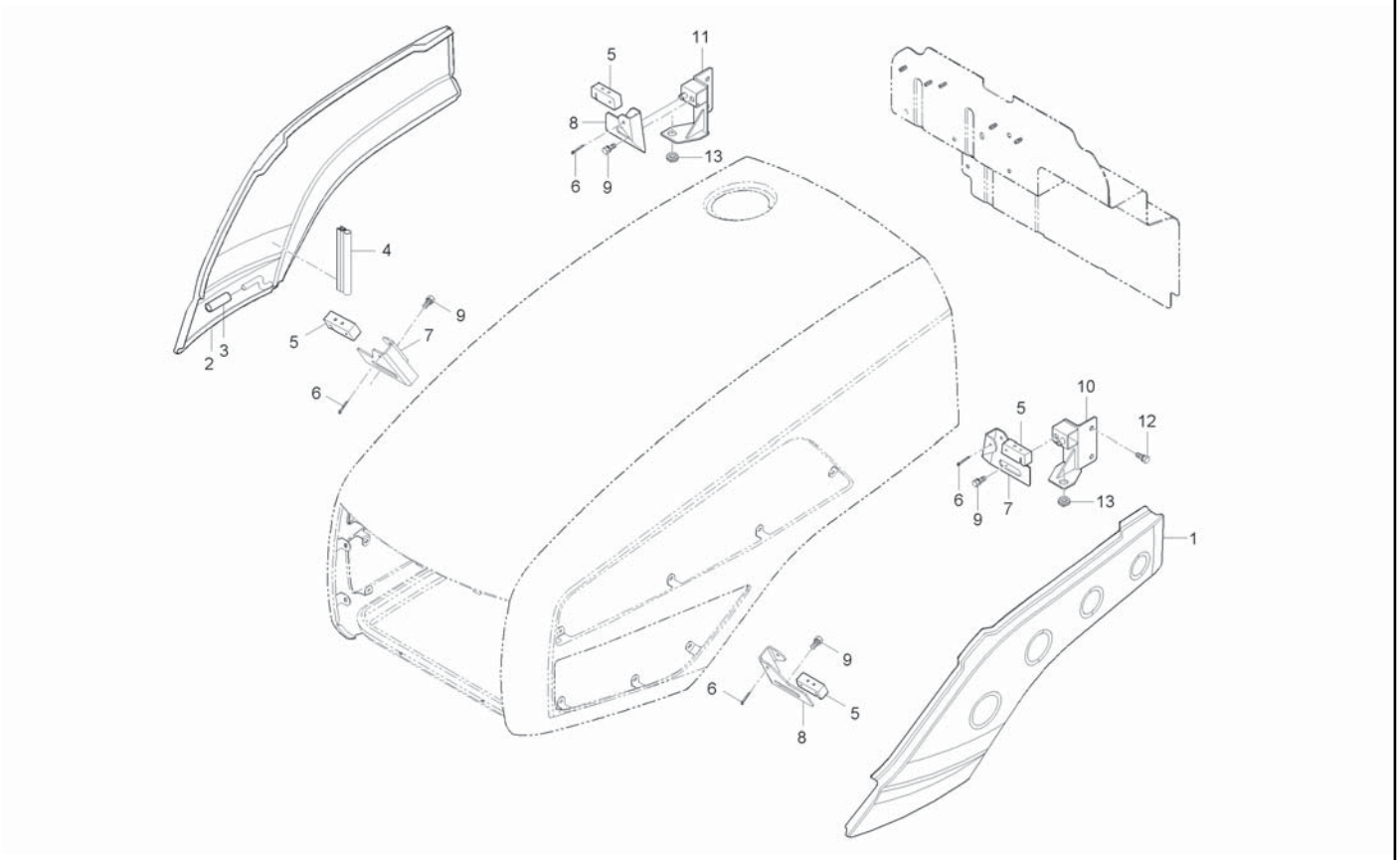

A : CK35-EU , B : CK35H-EU

No.	Part Number	Desciption	Q'TY A	B	C	D	E	I.C	Remark
1	T2185-50824	COVER, SIDE LH	1						
2	T2185-50834	COVER, SIDE RH	1						
3	09661-60030	HOSE, FUEL	2						
4	T2185-50891	RUBBER, SIDE COVER	2						
5	T2185-50841	HOOK, SIDE COVER	4						
6	05511-50325	PIN, SPLIT	4						
7	T2185-50852	PLATE 1, HOLDER	2						
8	T2185-50862	PLATE 2, HOLDER	2						
9	01125-50816	BOLT, WASHER	4						
10	T2185-50872	HOLDER, SIDE COVER LH	1						
11	T2185-50882	HOLDER, SIDE COVER RH	1						
12	01123-50816	BOLT, WASHER	4						
13	T4682-50251	GROMMET	2						

----> Old replace New
<-X-> Not interchangeable
<-O-> Interchangeable with another part(s)
<---- New replace Old
<---> Interchangeable

CK35M-T830A

BONNET 3 GROUP

(CK35-EU : GT8100001 ~)

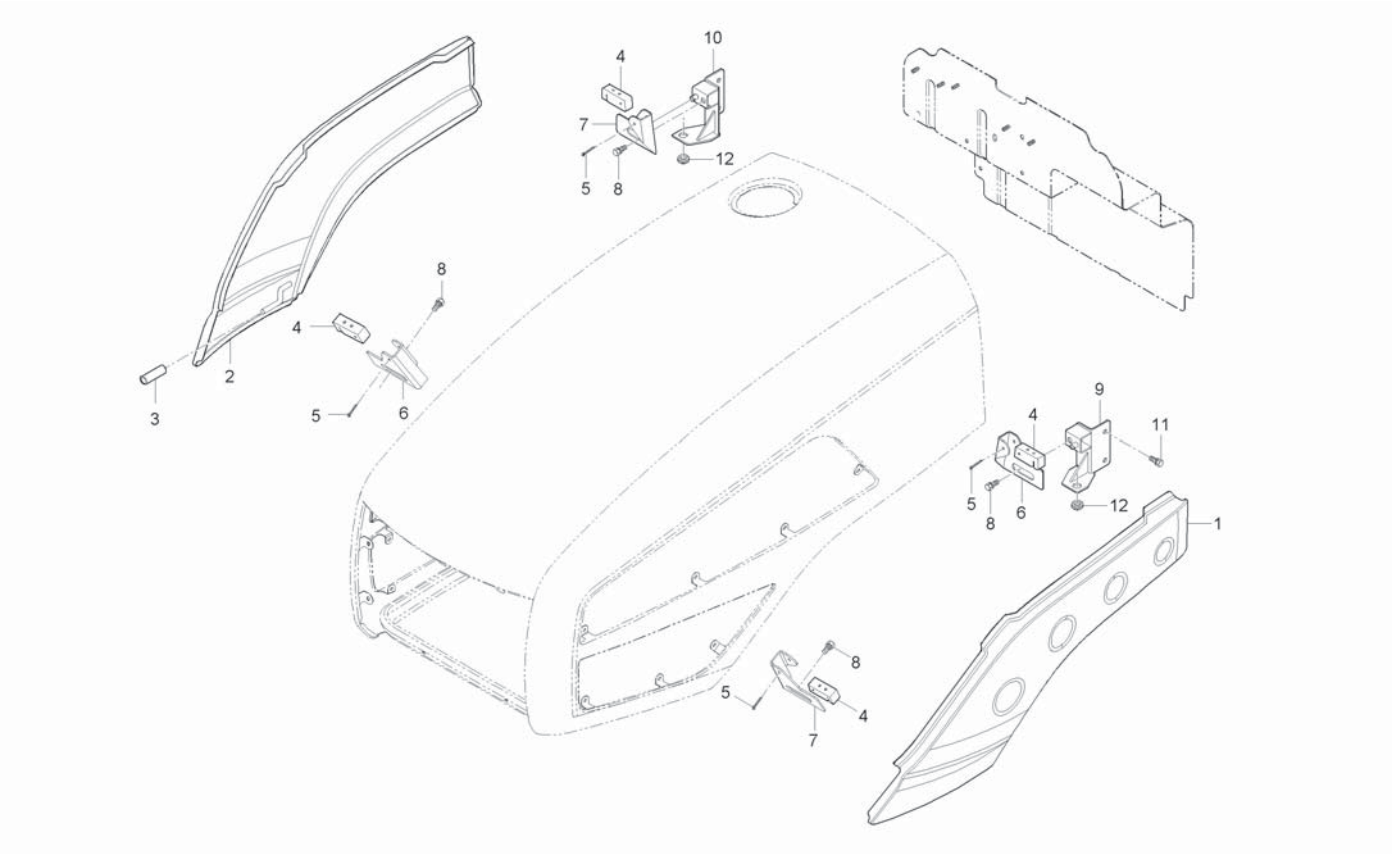

A : CK35-EU , B : CK35H-EU

No.	Part Number	Desciption	Q'TY A	Q'TY B	Q'TY C	Q'TY D	Q'TY E	I.C	Remark
1	T2155-50821	COVER, SIDE LH	1 ~HT8100038	1 ~HT8900076					
1	T2155-50821BB	COVER, SIDE LH	1 HT8100039~	1 JT8900001~				<-X->	
2	T2155-50831	COVER, SIDE RH	1 ~HT8100038	1 ~HT8900076					
2	T2155-50831BB	COVER, SIDE RH	1 HT8100039~	1 JT8900001~				<-X->	
3	09661-60030	HOSE, FUEL	2	2					
4	T2185-50841	HOOK, SIDE COVER	4	4					
5	05511-50325	PIN, SPLIT	4	4					
6	T2185-50852	PLATE 1, HOLDER	2	2					
7	T2185-50862	PLATE 2, HOLDER	2	2					
8	01125-50816	BOLT, WASHER	4	4					M8*P1.25
9	T2185-50872	HOLDER, SIDE COVER LH	1 ~HT8100038	1 ~HT8900076					
9	T2185-50872ED	HOLDER, SIDE-COVER	1 HT8100039~	1 JT8900001~				<-X->	
10	T2185-50882	HOLDER, SIDE COVER RH	1 ~HT8100038	1 ~HT8900076					
10	T2185-50882ED	HOLDER, SIDE-COVER	1 HT8100039~	1 JT8900001~				<-X->	
11	01123-50816	BOLT, WASHER	4	4					M8*P1.25
12	T4682-50251	GROMMET	2	2					

----> Old replace New
<-X-> Not interchangeable
<-O-> Interchangeable with another part(s)
<---- New replace Old
<---> Interchangeable

CK30H-T840A

FRAME GROUP

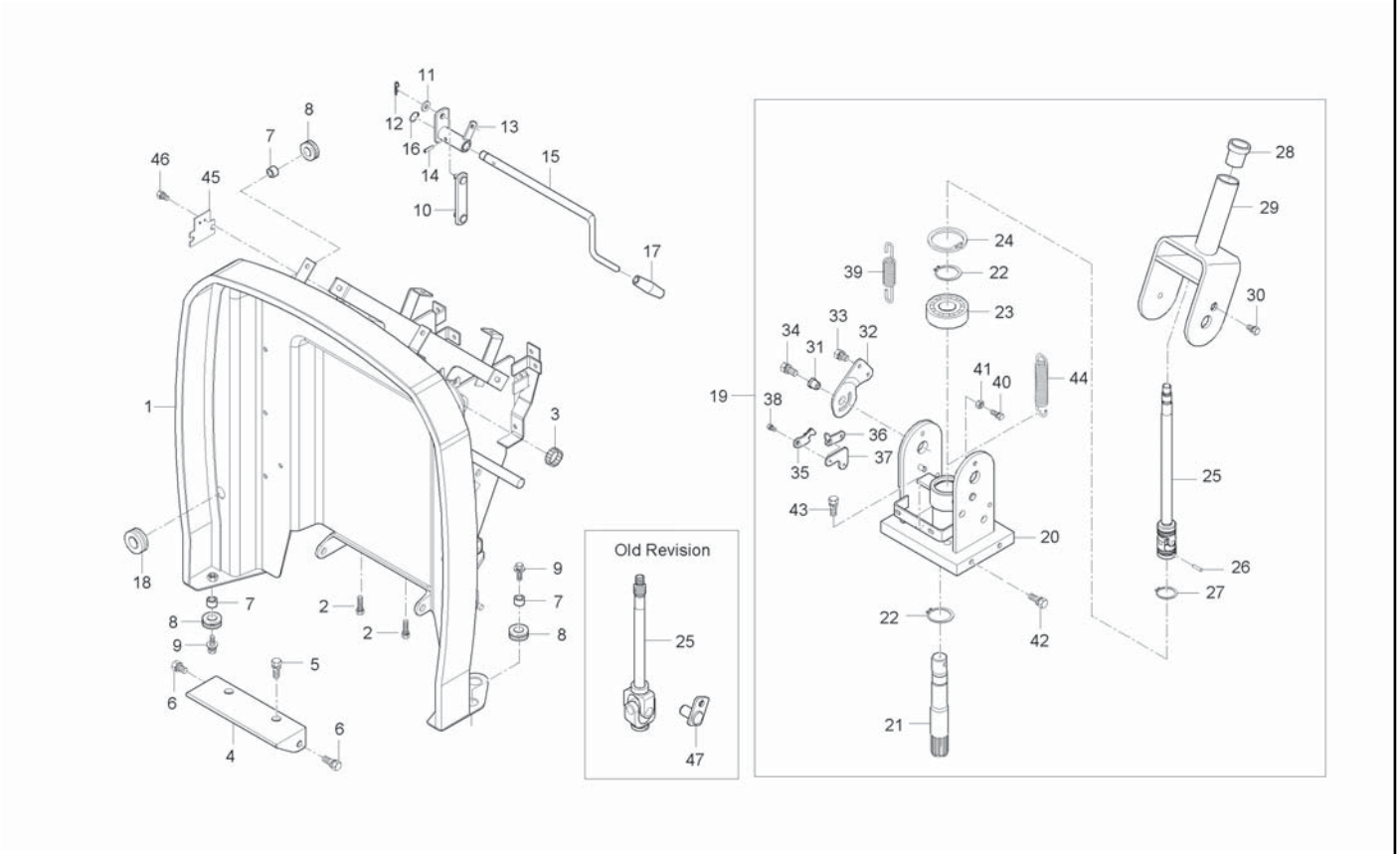

A : CK35-EU , B : CK35H-EU

No.	Part Number	Desciption	Q'TY A	Q'TY B	Q'TY C	Q'TY D	Q'TY E	I.C	Remark
1	T2195-55106	FRAME ASSY		1 ~HT8900076					
1	T2195-55107	FRAME ASSY		1 HT8900001~				<-X->	
2	01133-51245	BOLT, WASHER		2					
3	08822-53017	NEEDLE BEARING		2					NTN,K253017
4	T2185-55471	HOLDER, FRAME		1 ~HT8900076					
4	T2185-55471ED	HOLDER, FRAME		1 JT8900001~				<--->	
5	01133-51225	BOLT, WASHER		2					M12*P1.25
6	01133-51025	BOLT, WASHER		2					M10*1.25
7	T2350-50421	SPACER, RADIATOR SUPPORT		8					
8	T2350-50431	GROMMET		8					
9	01127-50825	BOLT		6					
9	01125-50825	BOLT, WASHER		2				<--->	M8*1.25
10	T2185-66041	ROD, TILT		1					
11	04013-50080	WASHER		2					M8
12	05515-50800	PIN, SNAP		2					M8
13	T2185-66053	ARM, CONNECTING		1					
14	05411-00522	PIN, SPRING		1					
15	T2185-66061	LEVER, TILT		1					
15	T2185-66062	LEVER, TILT		1				<----	

----> Old replace New
<-X-> Not interchangeable
<-O-> Interchangeable with another part(s)
<---- New replace Old
<---> Interchangeable

CK30H-T840A

FRAME GROUP

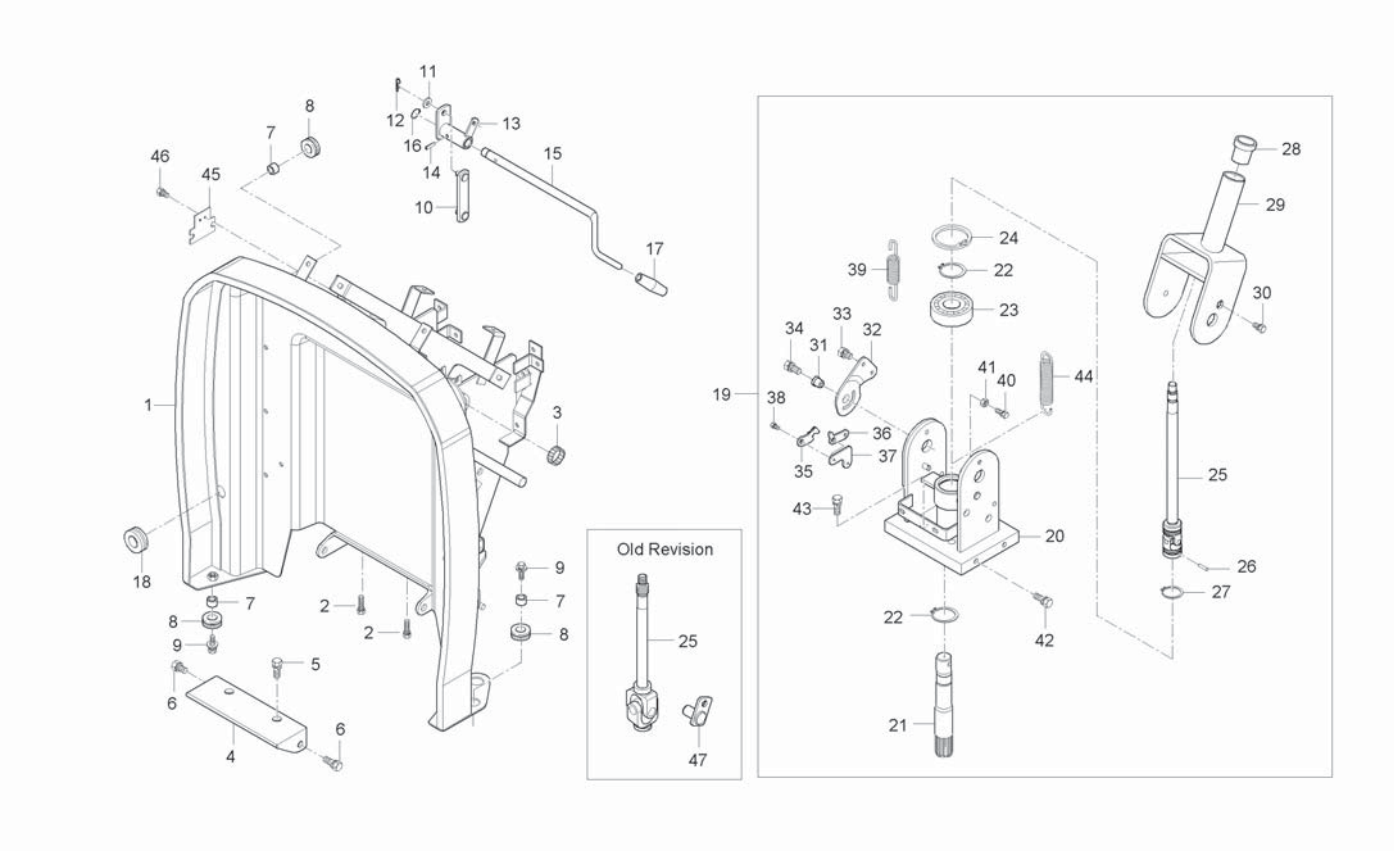

A : CK35-EU , B : CK35H-EU

No.	Part Number	Desciption	Q'TY A	Q'TY B	Q'TY C	Q'TY D	Q'TY E	I.C	Remark
16	04612-00120	SNAP RING		1					#12
17	T2360-33192	GRIP, HST FIXING		1					
18	31355-2949-1	GROMMET		1					
19	T2185-66105	STEERING TOTAL ASSY		1 ~HT8900076					
19	T2185-66105BB	STEERING TOTAL ASSY		1 JT8900001~				<-X->	
19	T2155-66101BB	STEERING ASSY		1				<----	
20	T2185-66112	SUPPORT, STEERING		1					
21	T2185-66121	SHAFT		1					
21	T2155-66121	SHAFT PRANTING PIWR		1				<----	
22	04612-00170	SNAP RING		2					
23	08141-06203	BALL BEARING		1					6203DD
24	04611-00400	RING, STOPPER		1					
25	T2185-66132	STEERING SHAFT ASSY		1					
25	T2155-66131	ASSY, STEERING SHAFT		1				<----	
26	05411-00622	PIN, SPRING		1					
26	66116-4135-3	PIN, PARALLEL		1				<----	
27	04612-00250	SNAP RING		1					
27	04612-00280	SNAP RING		1				<----	
28	T2185-62241	RUBBER, CUSHION		1					

----> Old replace New
<-X-> Not interchangeable
<-O-> Interchangeable with another part(s)
<---- New replace Old
<---> Interchangeable

CK30H-T840A

FRAME GROUP

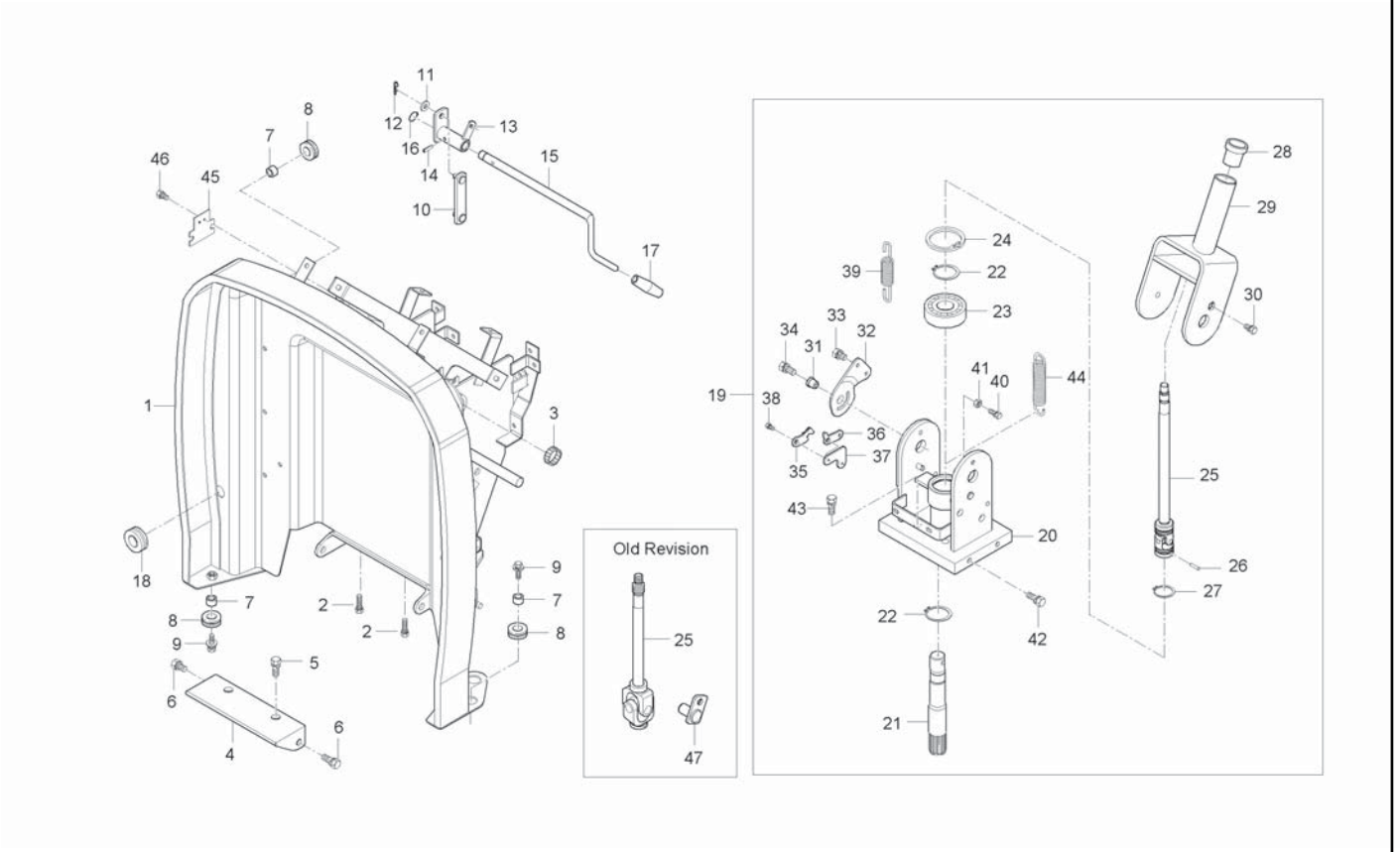

A : CK35-EU , B : CK35H-EU

No.	Part Number	Desciption	Q'TY A	Q'TY B	Q'TY C	Q'TY D	Q'TY E	I.C	Remark
29	T2185-66011	STEERING COLUMN ASSY		1					
30	01123-50816	BOLT, WASHER		1					M8*P1.25
31	T4682-66081	BUSHING		1					
32	T4682-66061	GEAR		1					
33	01133-51016	BOLT, WASHER		1					M10*P1.25
34	01133-51028	BOLT, WASHER		1					M10*1.25
35	T4682-66071	GEAR		1					
36	T2198-66031	LEVER, TILT		1					
37	T4682-66111	MOUNTING PLATE		1					
38	01023-50612	BOLT, WASHER		2					M6*P1.0
39	T2185-66161	SPRING, TILT		1					
40	01053-50625	BOLT		1					M6*P1.0
41	02114-50060	NUT		1					
42	01133-51020	BOLT, WASHER		4					M10*P1.25
43	01123-51030	BOLT, WASHER		4					M10*1.5
44	T4520-27831	SPRING		1					
44	T2198-27831	SPRING		1				<----	
45	T2350-55291	PLATE, SENSOR HOLDER		1					
45	T2350-55292	PLATE, SENSOR HOLDER		1				<----	

----> Old replace New
<-X-> Not interchangeable
<-O-> Interchangeable with another part(s)
<---- New replace Old
<---> Interchangeable

CK30H-T840A

FRAME GROUP

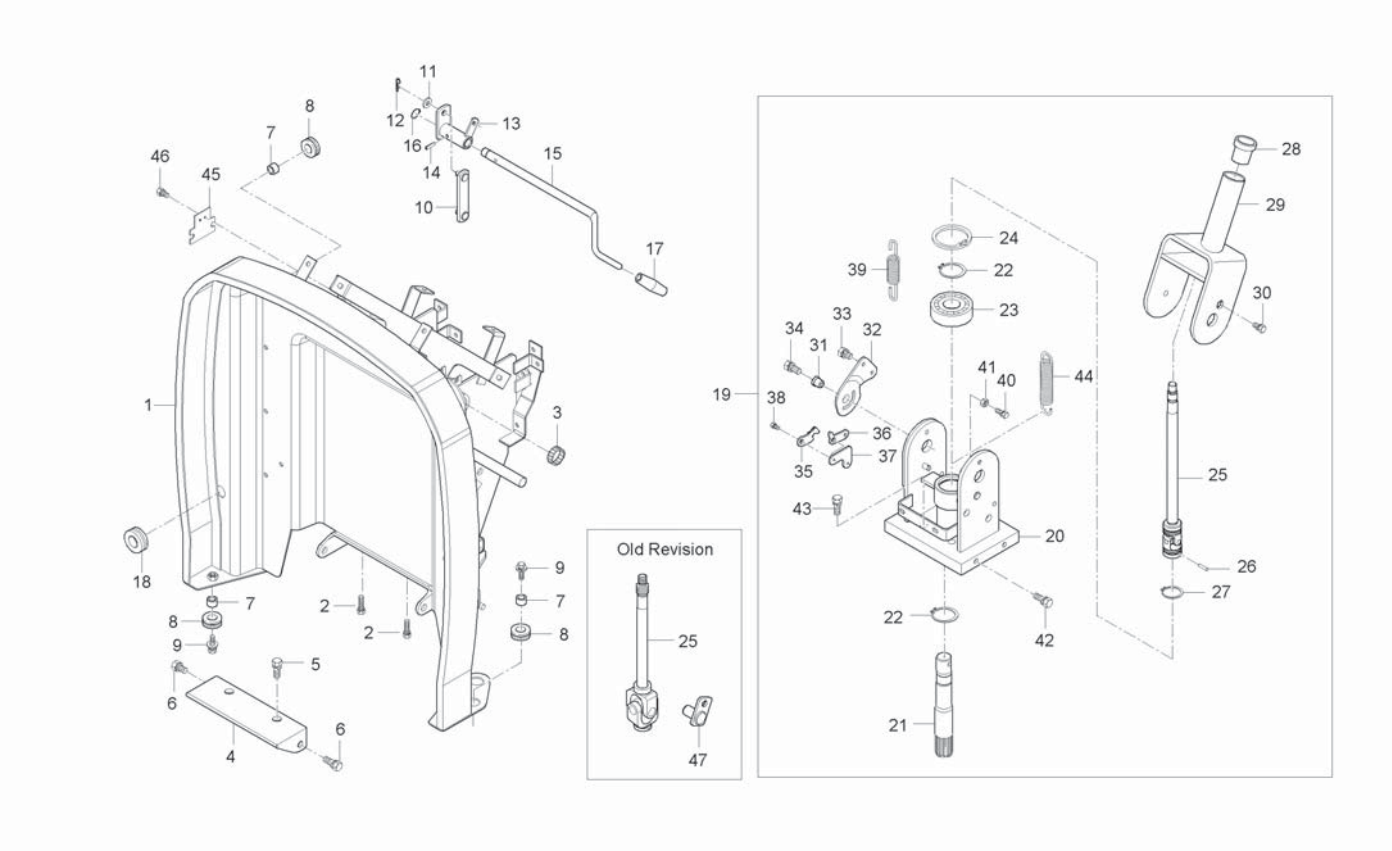

A : CK35-EU , B : CK35H-EU

No.	Part Number	Desciption	Q'TY A	Q'TY B	Q'TY C	Q'TY D	Q'TY E	I.C	Remark
46	01025-50616	BOLT, WASHER		2					M6*P1
47	T4682-48061	PLATE, GUIDE		1					

----> Old replace New
<-X-> Not interchangeable
<-O-> Interchangeable with another part(s)
<---- New replace Old
<---> Interchangeable

CK30M-T840A

FRAME GROUP

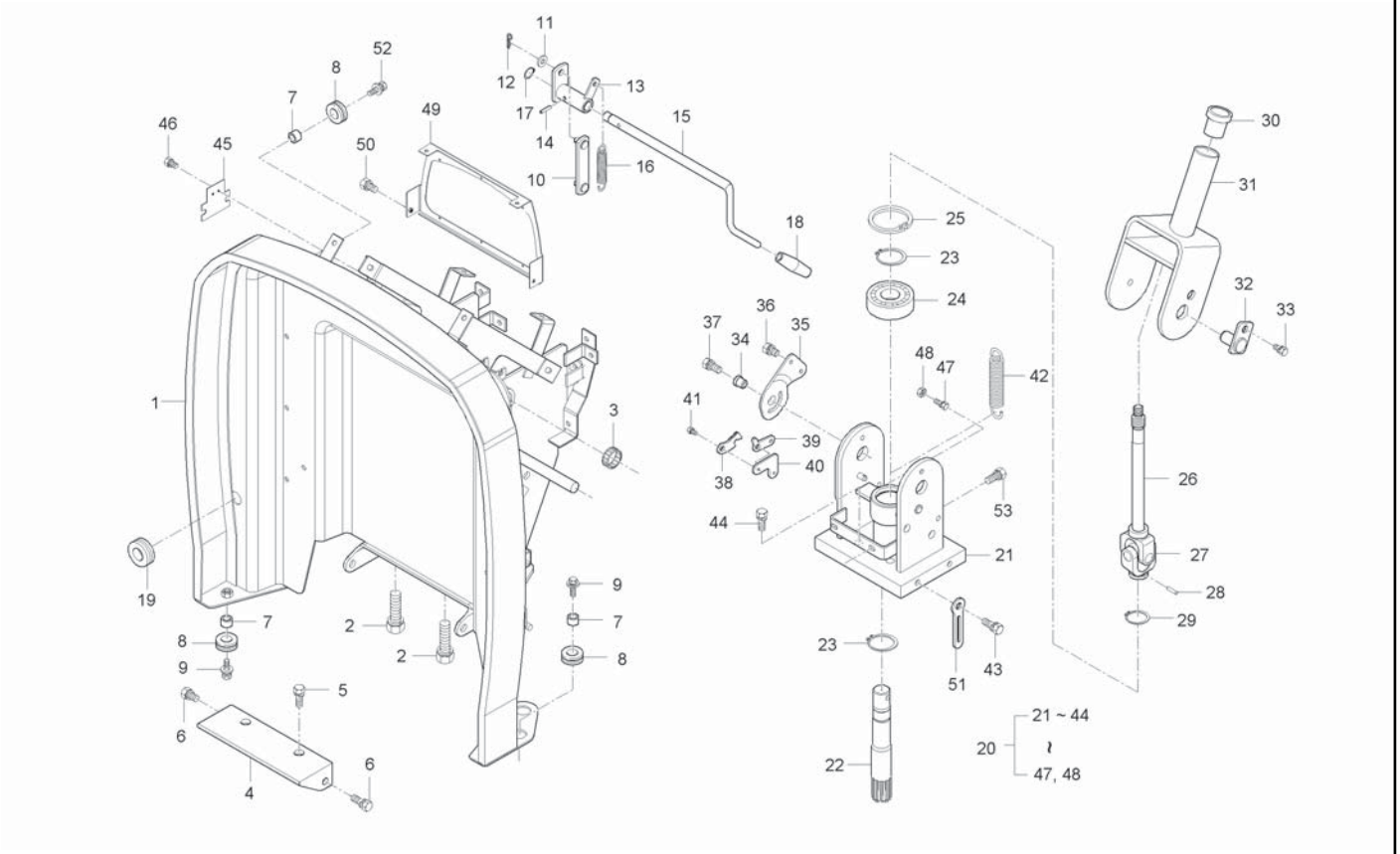

A : CK35-EU , B : CK35H-EU

No.	Part Number	Desciption	Q'TY A	B	C	D	E	I.C	Remark
1	T2185-55104	ASSY,FRAME	1						
1	T2185-55105	FRAME ASSY	1					<--->	
1	T2185-55106	FRAME ASSY	1					<--->	
1	T2185-55107	FRAME ASSY	1					<--->	
1	T2185-55108	FRAME ASSY	1					<--->	
1	T2185-55109	FRAME ASSY	1 ~GT8100014					<-X->	
1	T2185-5510A	FRAME ASSY	1 GT8100015~					<-X->	
1	T2185-5510B	FRAME ASSY	1					<----	
2	01133-51245	BOLT, WASHER	2						
3	08822-53017	NEEDLE BEARING	2						
4	T2185-55471	HOLDER, FRAME	1 ~HT8100038						
4	T2185-55471ED	HOLDER, FRAME	1 HT8100039~					<--->	
5	01133-51225	BOLT, WASHER	2						
6	01133-51022	BOLT	2						
6	01133-51025	BOLT, WASHER	2					<----	
7	T2350-50421	SPACER, RADIATOR SUPPORT	8						
8	T2350-50431	GROMMET	8						
9	01127-50825	BOLT	6						
10	T2185-66041	ROD, TILT	1						

----> Old replace New
<-X-> Not interchangeable
<-O-> Interchangeable with another part(s)
<---- New replace Old
<---> Interchangeable

CK30M-T840A

FRAME GROUP

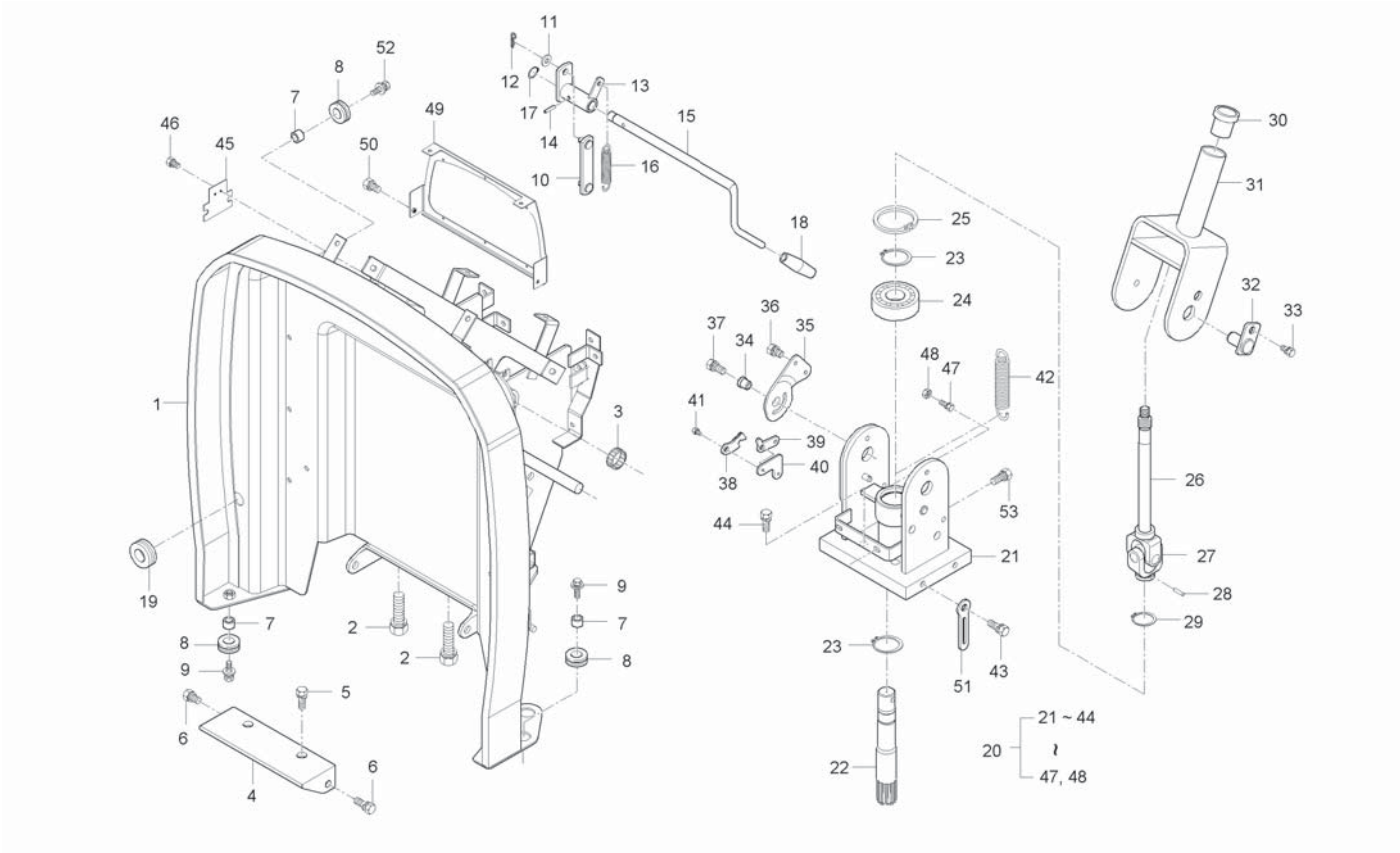

A : CK35-EU , B : CK35H-EU

No.	Part Number	Desciption	Q'TY A	Q'TY B	Q'TY C	Q'TY D	Q'TY E	I.C	Remark
11	04013-50080	WASHER	2						
12	05515-50080	PIN, SNAP	2						
12	05515-50800	PIN, SNAP	2					<----	
13	T2185-66053	ARM, CONNECTING	1						
14	05411-00522	PIN, SPRING	1						
15	T2185-66061	LEVER, TILT	1						
15	T2185-66062	LEVER, TILT	1					<----	
16	T4520-26161	SPRING, BRAKE	1						
16	T4520-27831	SPRING	1					<----	
16	T2198-27831	SPRING	1					<----	
17	04612-00120	SNAP RING	1						
18	T2360-33192	GRIP, HST FIXING	1						
19	31355-2949-1	GROMMET	1						
20	T2185-66104	STEERING TOTAL ASSY	1						
20	T2185-66105	STEERING TOTAL ASSY	1 ~JT8100013					<----	
20	T2185-66105BB	STEERING TOTAL ASSY	1 JT8100014~					<-X->	
20	T2155-66101BB	STEERING ASSY	1					<----	
21	T2185-66112	SUPPORT, STEERING	1						
22	T2185-66121	SHAFT	1 ~JT8100013						

----> Old replace New
<-X-> Not interchangeable
<-O-> Interchangeable with another part(s)
<---- New replace Old
<---> Interchangeable

CK30M-T840A

FRAME GROUP

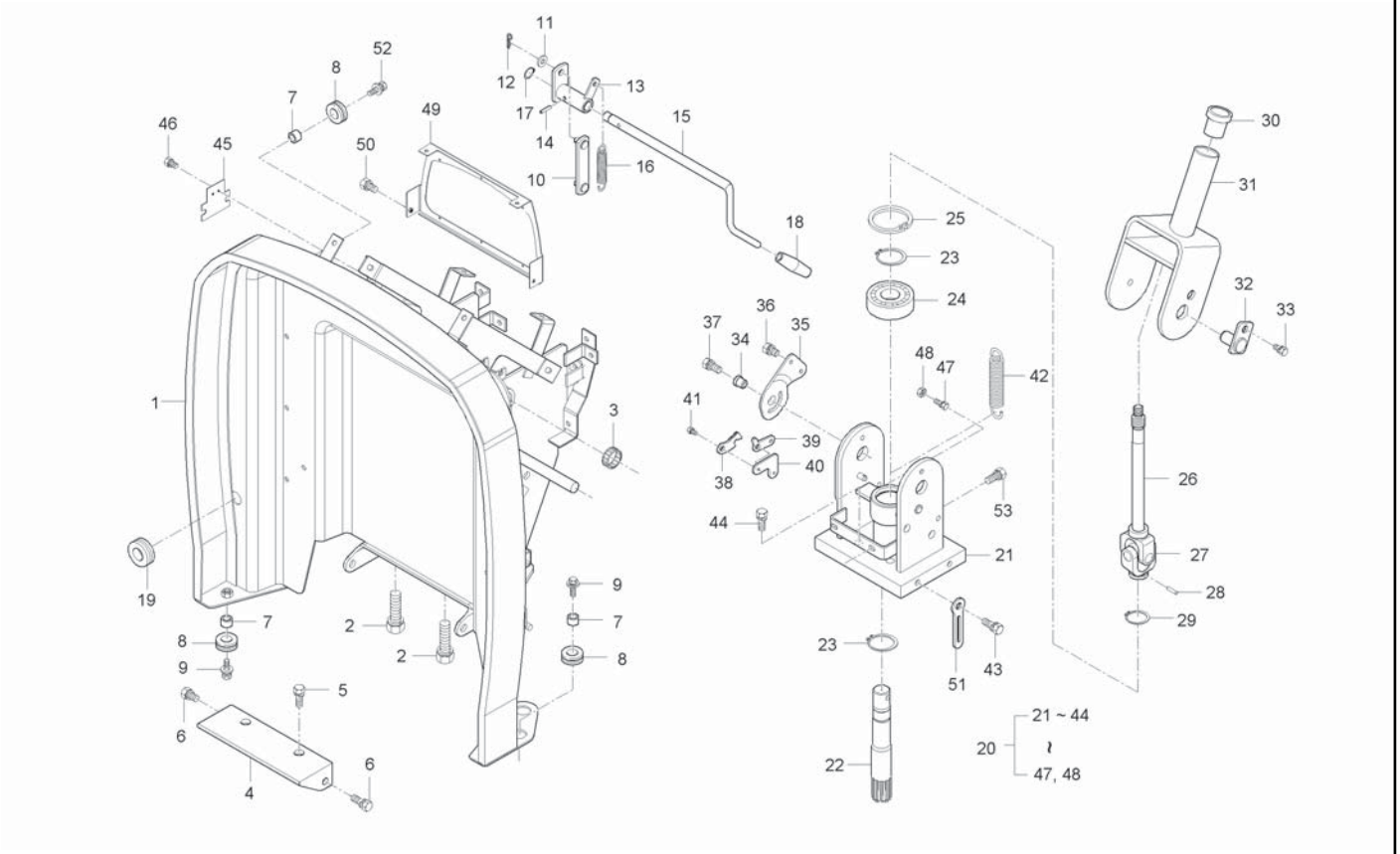

A : CK35-EU , B : CK35H-EU

No.	Part Number	Desciption	Q'TY A	Q'TY B	Q'TY C	Q'TY D	Q'TY E	I.C	Remark
22	T2155-66121	SHAFT PRANTING PIWR	1 JT8100014~					<-0->	
23	04612-00170	SNAP RING	2						
24	08141-06203	BALL BEARING	1						
25	04611-00400	RING, STOPPER	1						
26	T2185-66132	STEERING SHAFT ASSY	1 ~JT8100013						
26	T2155-66131	ASSY, STEERING SHAFT	1 JT8100014~					<-0->	
27	T4520-62252	UNIVERSAL JOINT ASSY	1 ~JT8100013						
27	P4510-41312	UNIVERSAL JOINT	1 JT8100014~					<-0->	
28	05411-00622	PIN, SPRING	1 ~JT8100013						
28	66116-4135-3	PIN, PARALLEL	1 JT8100014~					<-0->	
29	04612-00250	SNAP RING	1 ~JT8100013						
29	04612-00280	SNAP RING	1 JT8100014~					<-0->	
30	T2185-62241	RUBBER, CUSHION	1						
31	T2185-66011	STEERING COLUMN ASSY	1						
32	T4682-48061	PLATE, GUIDE	1						
33	01123-50816	BOLT, WASHER	1						
34	T4682-66081	BUSHING	1						
35	T4682-66061	GEAR	1						
36	01133-51016	BOLT, WASHER	1						

----> Old replace New
<-X-> Not interchangeable
<-O-> Interchangeable with another part(s)
<---- New replace Old
<---> Interchangeable

CK30M-T840A

FRAME GROUP

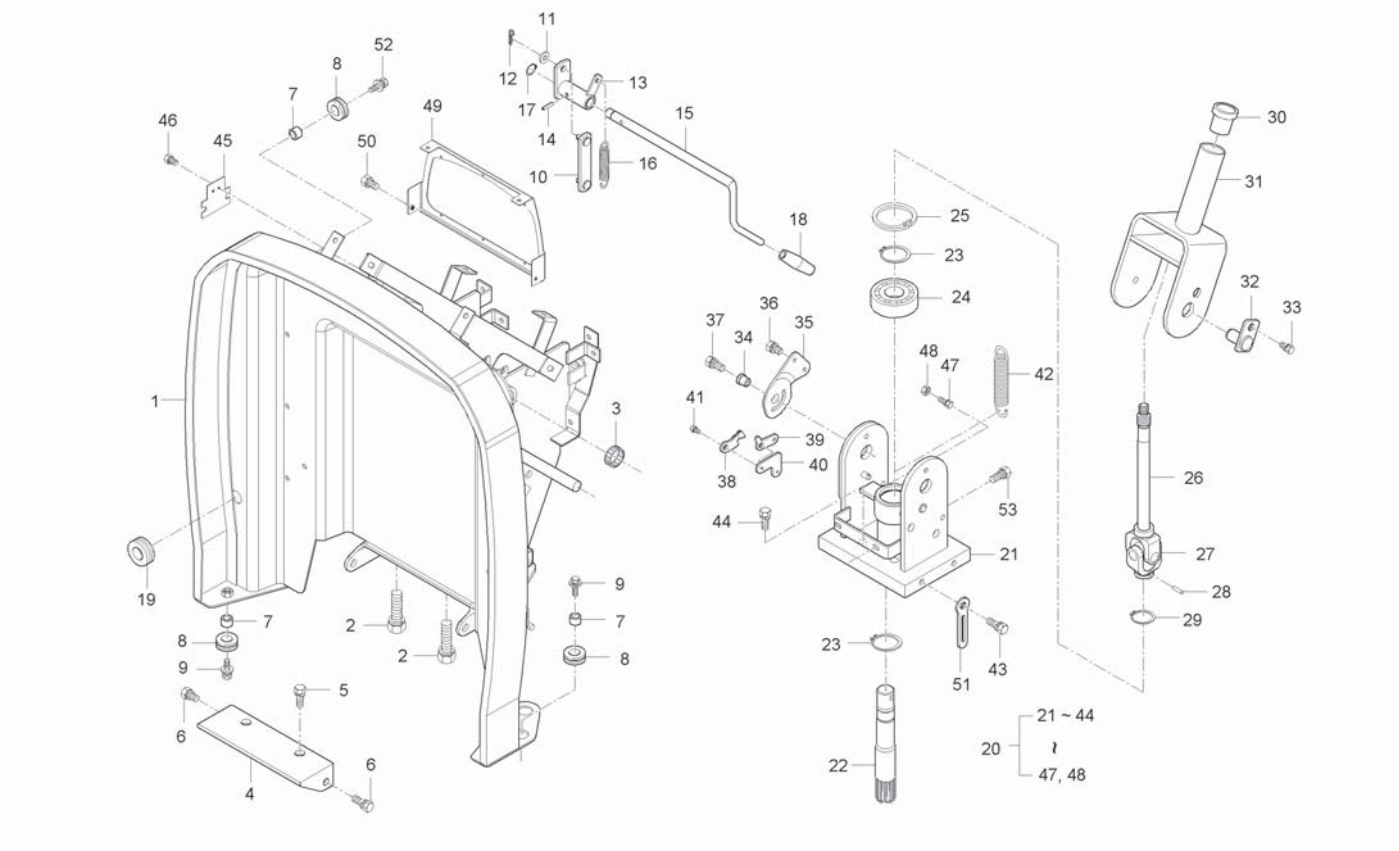

A : CK35-EU , B : CK35H-EU

No.	Part Number	Desciption	Q'TY A	B	C	D	E	I.C	Remark
37	01133-51028	BOLT, WASHER	1						
38	T4682-66071	GEAR	1						
39	T4682-66031	LEVER	1						
39	T2198-66031	LEVER, TILT	1					<----	
40	T4682-66111	MOUNTING PLATE	1						
41	01023-50612	BOLT, WASHER	2						
42	T2185-66161	SPRING, TILT	1						
43	01133-51035	BOLT, WASHER	4						
43	01133-51020	BOLT, WASHER	4					<--->	
44	01123-51030	BOLT, WASHER	4						
45	T2350-55291	PLATE, SENSOR HOLDER	1						
45	T2350-55292	PLATE, SENSOR HOLDER	1					<----	
46	01023-50612	BOLT, WASHER	2						
46	01025-50616	BOLT, WASHER	2					<--->	
47	01053-50625	BOLT	1						
48	02114-50060	NUT	1						
49	T2185-69611	HOLDER, INSTRUMENT	1						
50	01025-50616	BOLT, WASHER	4						
51	34260-2938-1	CLAMP,CORD	1						

----> Old replace New
<-X-> Not interchangeable
<-O-> Interchangeable with another part(s)
<---- New replace Old
<---> Interchangeable

CK30M-T840A

FRAME GROUP

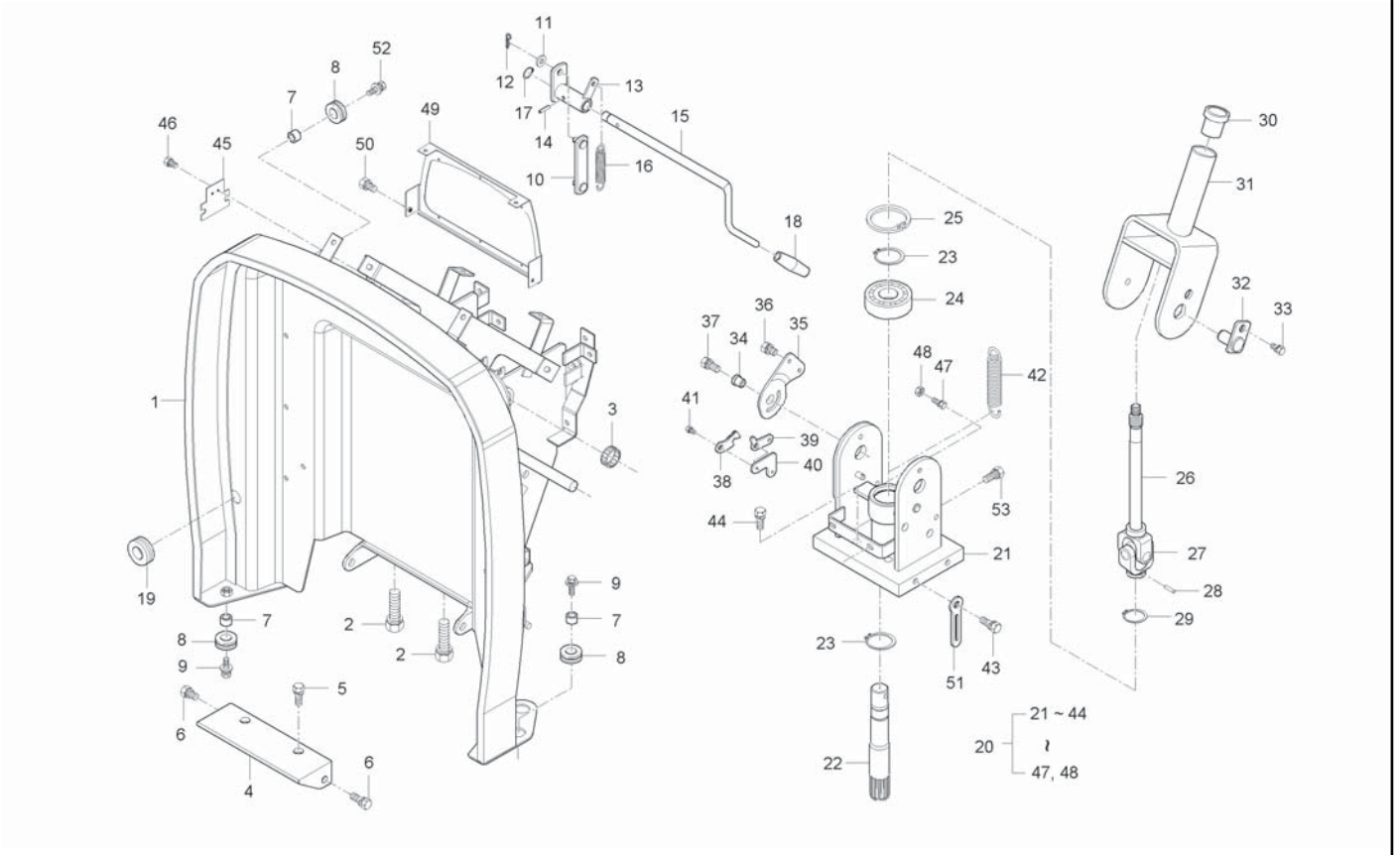

A : CK35-EU , B : CK35H-EU

No.	Part Number	Desciption	Q'TY A	B	C	D	E	I.C	Remark
51	37155-3447-1	CLAMP,CORD	1					<--->	
52	01125-50825	BOLT, WASHER	2						
53	01025-50620	BOLT, WASHER	2						

----> Old replace New
<-X-> Not interchangeable
<-O-> Interchangeable with another part(s)
<---- New replace Old
<---> Interchangeable

CK30M-T850A

FUEL TANK GROUP

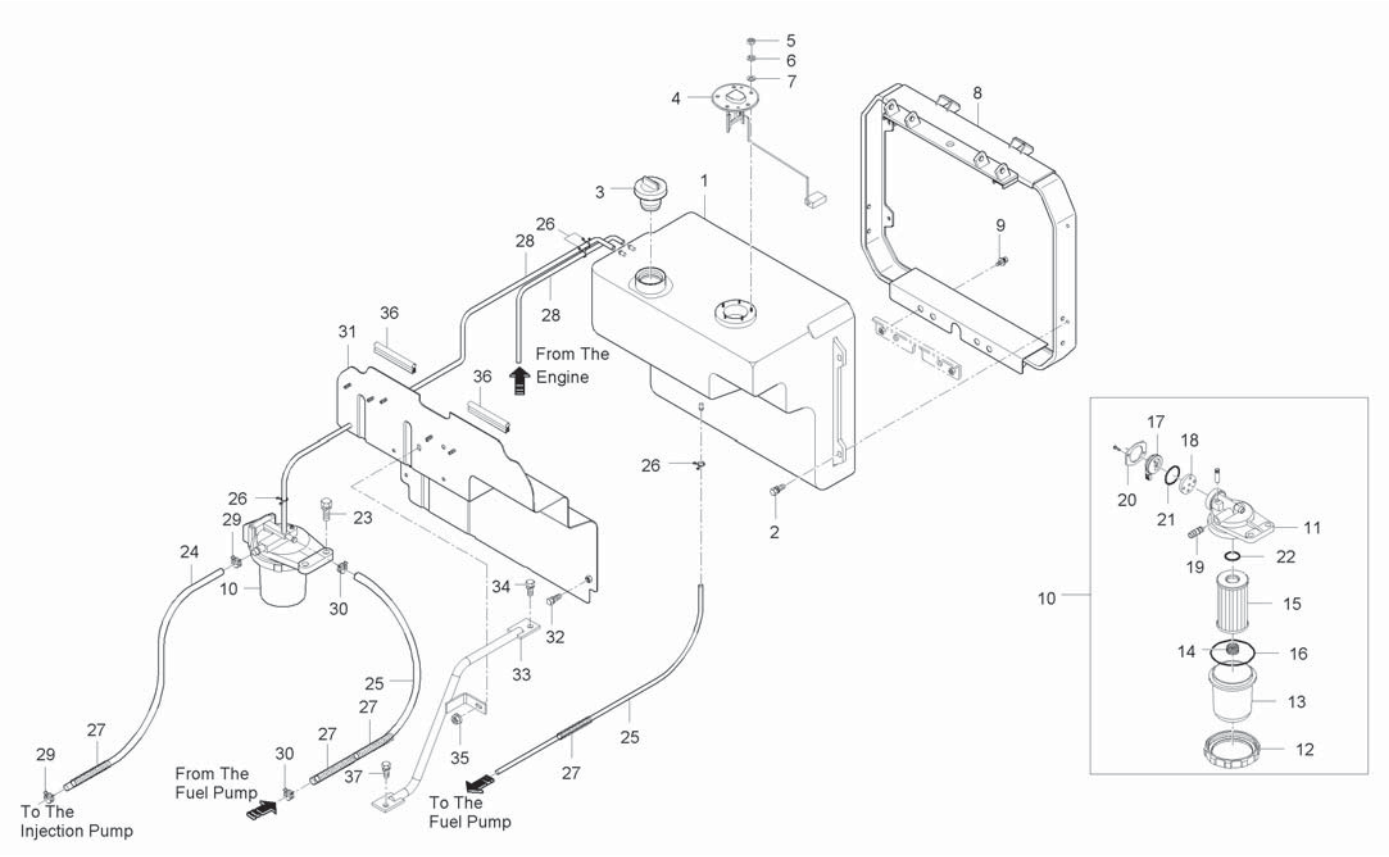

A : CK35-EU , B : CK35H-EU

No.	Part Number	Desciption	Q'TY A	Q'TY B	Q'TY C	Q'TY D	Q'TY E	I.C	Remark
1	T2185-81112	TANK, FUEL	1 ~HT8100038	1 ~HT8900076					
1	T2185-81112BB	TANK, FUEL	1 HT8100039~	1 JT8900001~				<-X->	
2	01125-50820	BOLT, WASHER	4	4					M8*P1.25
2	01125-50825	BOLT, WASHER	4	4				<--->	M8*1.25
3	T2611-54822	ASS'Y, FUEL CAP	1	1					
4	T2185-69262	FUEL SENDER ASSY	1	1					
4	T2185-69321	FUEL SENDER ASSY	1	1				<--->	
4	T2185-69262	FUEL SENDER ASSY	1	1				<--->	
4	T2198-69262	FUEL SENDER ASSY	1	1				<--->	
4	T2198-69263	FUEL SENDER ASSY	1	1				<----	
5	02054-50040	NUT	5	5					M4*P0.7
6	04512-50040	WASHER, SPRING	5	5					M4
7	04012-50040	WASHER, PLAIN	5	5					
8	T2185-81123	SUPPORT, FUEL TANK	1	1					
8	T2185-81124	SUPPORT, FUEL TANK	1 ~HT8100038	1 ~HT8900076				<-X->	
8	T2185-81124BB	SUPPORT, FUEL TANK	1 HT8100039~	1 JT8900001~				<-X->	
9	01123-50820	BOLT, WASHER	2	2					M8*P1.25
10	T4240-35015	FUEL FILTER ASSY	1	1					
10	T4125-35011	FUEL FILTER ASSY	1	1				<-X->	

----> Old replace New
<-X-> Not interchangeable
<-O-> Interchangeable with another part(s)
<---- New replace Old
<---> Interchangeable

CK30M-T850A

FUEL TANK GROUP

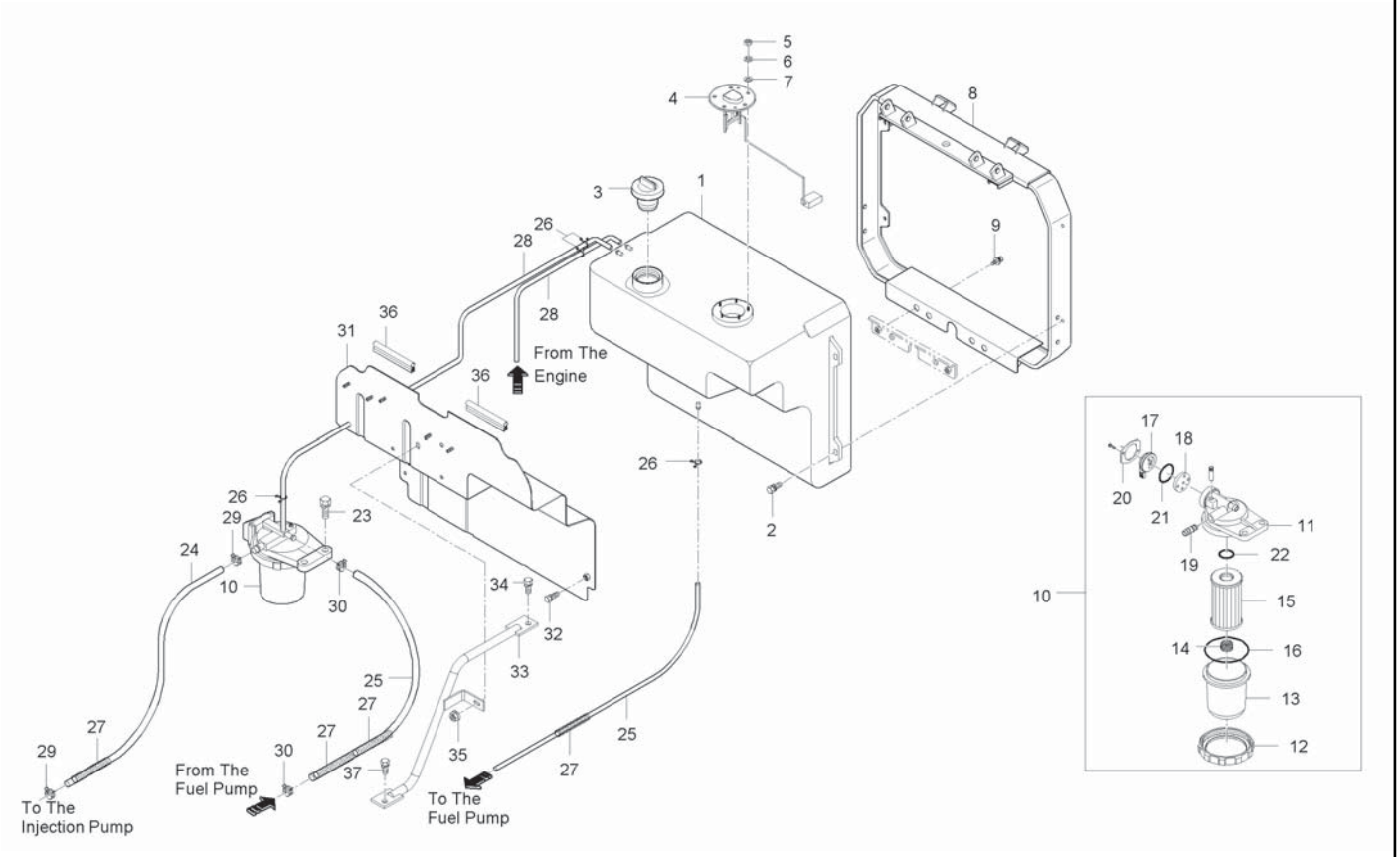

A : CK35-EU , B : CK35H-EU

No.	Part Number	Desciption	Q'TY A	Q'TY B	Q'TY C	Q'TY D	Q'TY E	I.C	Remark
10	T4125-35012	FUEL FILTER ASSY	1	1				<----	
11	T4240-35023	BODY, FUEL FILTER	1	1					
11	T4125-35021	BODY, FUEL FILTER	1	1				<-X->	
12	84612-4315-0	NUT, STOPPER	1	1					
13	T4240-43133	POT, FILTER	1	1					
13	T4240-43134	POT, FILTER	1	1				<----	
14	84612-4393-0	SPRING	1	1					
15	84612-4316-0	ELEMENT, FUEL FILTER	1	1					
16	04811-50650	O RING	1	1					
17	T4240-35083	GRIP, FILTER	1	1					
18	T4240-35092	SUPPORT, HANDLE	1	1					
19	84612-4317-0	NIPPLE	1	1					
20	84612-4354-0	PLATE, THRUST	1	1					
21	04811-10290	O RING	1	1					
22	04811-00160	O RING	1	1					DIA15.8
23	01123-50830	BOLT, WASHER	2	2					M8P1.25*30
23	01754-50825	BOLT, FLANGE	2	2				<--->	
24	09661-80370	HOSE 1, FUEL	1	1					
24	09661-80300	HOSE, FUEL	1	1				<-X->	

----> Old replace New
<-X-> Not interchangeable
<-O-> Interchangeable with another part(s)
<---- New replace Old
<---> Interchangeable

CK30M-T850A

FUEL TANK GROUP

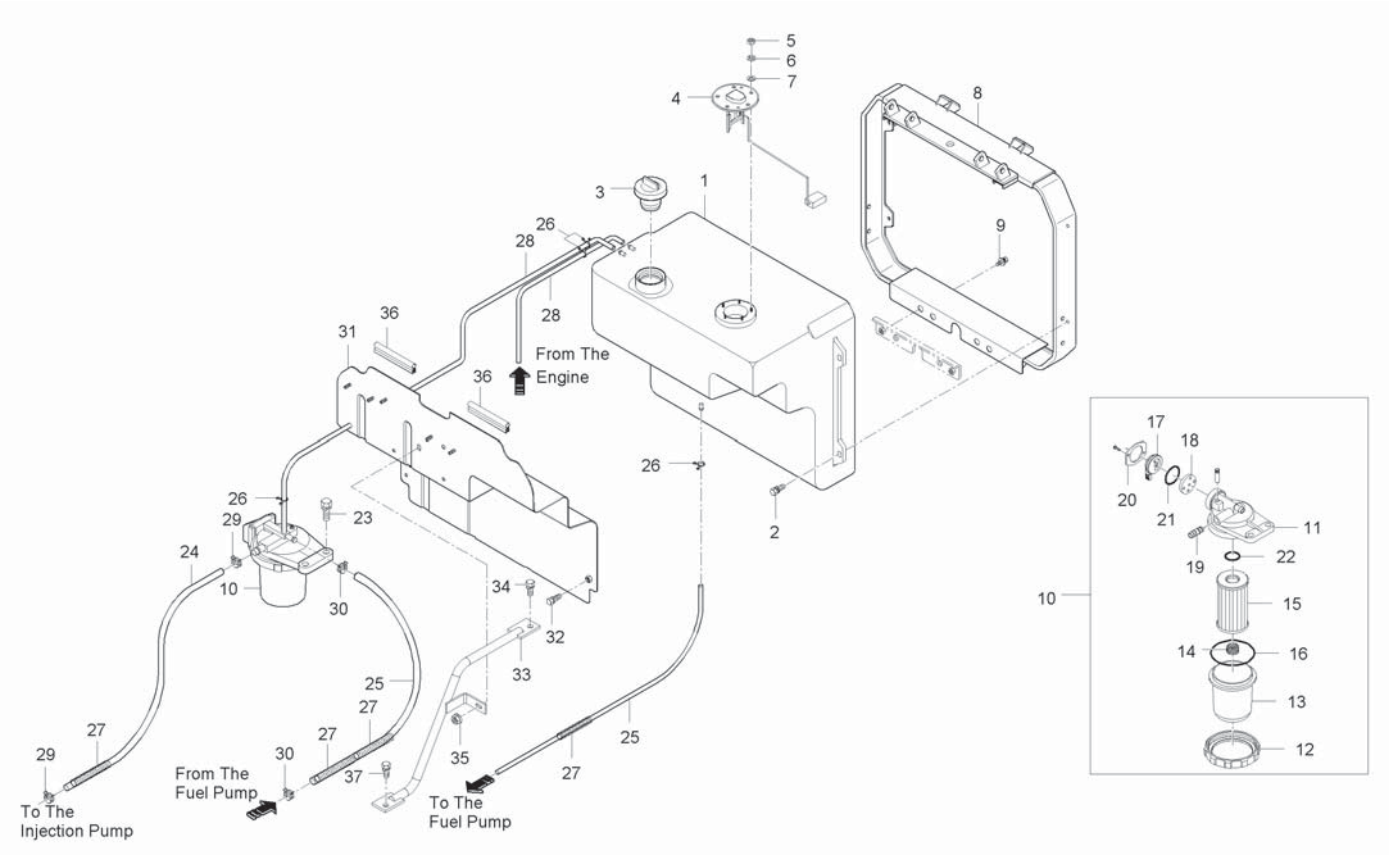

A : CK35-EU , B : CK35H-EU

No.	Part Number	Desciption	Q'TY A	Q'TY B	Q'TY C	Q'TY D	Q'TY E	I.C	Remark
25	09661-80450	HOSE, FUEL	2	2					
26	38430-4515-1	CLAMP, FUEL HOSE	6	6					
26	14911-4275-1	CLIP, TUBE	6	6				<----	
27	67111-5832-3	SPRING, PROTECTION	4	4					
27	67111-5832-3	SPRING, PROTECTION	3	3				<--->	
28	38430-3556-1	TUBE 4, FUEL	2	2					
29	15271-4271-1	CLIP	2	2					
29	14971-4275-1	CLMAP, HOSE	2	2				<--->	
30	15271-4271-1	CLIP	2	2					
30	14971-4275-1	CLMAP, HOSE	2	2				<--->	
31	T2185-81153	PLATE, INTERCEPTION	1	1					
31	T2185-81154	PLATE, INTERCEPTION	1	1				<-X->	
31	T2185-81155	PLATE, INTERCEPTION	1 ~HT8100038	1 ~HT8900076				<----	
31	T2185-81155BB	PLATE, INTERCEPTION	1 HT8100039~	1 JT8900001~				<-X->	
32	01023-50616	BOLT, WASHER	2	2					M6*P1.0
33	T2185-81162	HOLDER, INTERCEPTION PLATE	1 ~HT8100038	1 ~HT8900076					
33	T2185-81162ED	HOLDER, SHUTTLE	1 HT8100039~	1 JT8900001~				<-X->	
34	01123-50822	BOLT	2	2					M8XP1.25
35	02751-50060	FLANGE NUT	1	1					M6*P1.0

----> Old replace New
<-X-> Not interchangeable
<-O-> Interchangeable with another part(s)
<---- New replace Old
<---> Interchangeable

CK30M-T850A

FUEL TANK GROUP

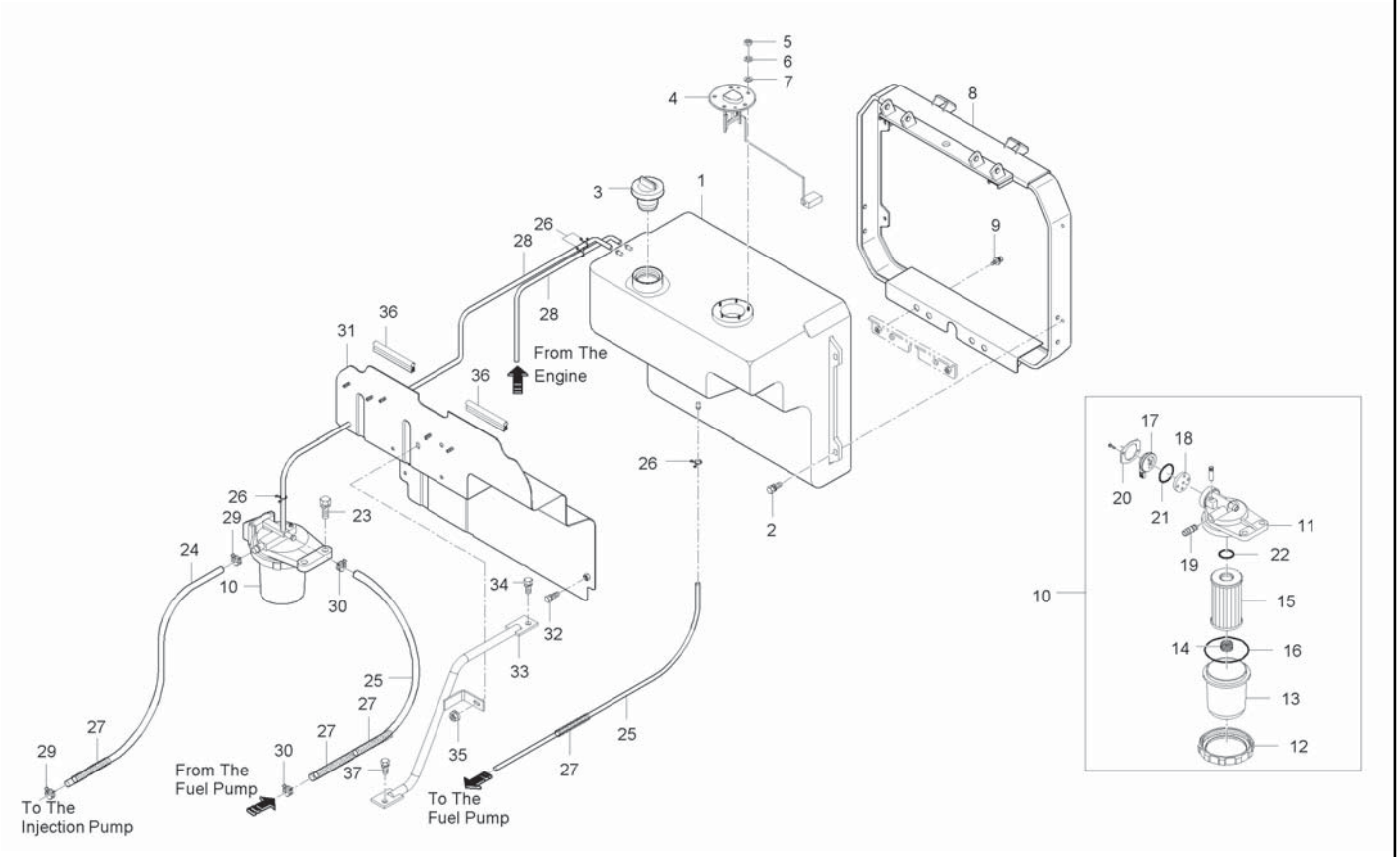

A : CK35-EU , B : CK35H-EU

No.	Part Number	Desciption	Q'TY A	Q'TY B	Q'TY C	Q'TY D	Q'TY E	I.C	Remark
36	T2185-81172	RUBBER	2	2					
37	01123-50822	BOLT	1	1					M8XP1.25

----> Old replace New
<-X-> Not interchangeable
<-O-> Interchangeable with another part(s)
<---- New replace Old
<---> Interchangeable

CK30M-T860A

ACCELERATOR GROUP

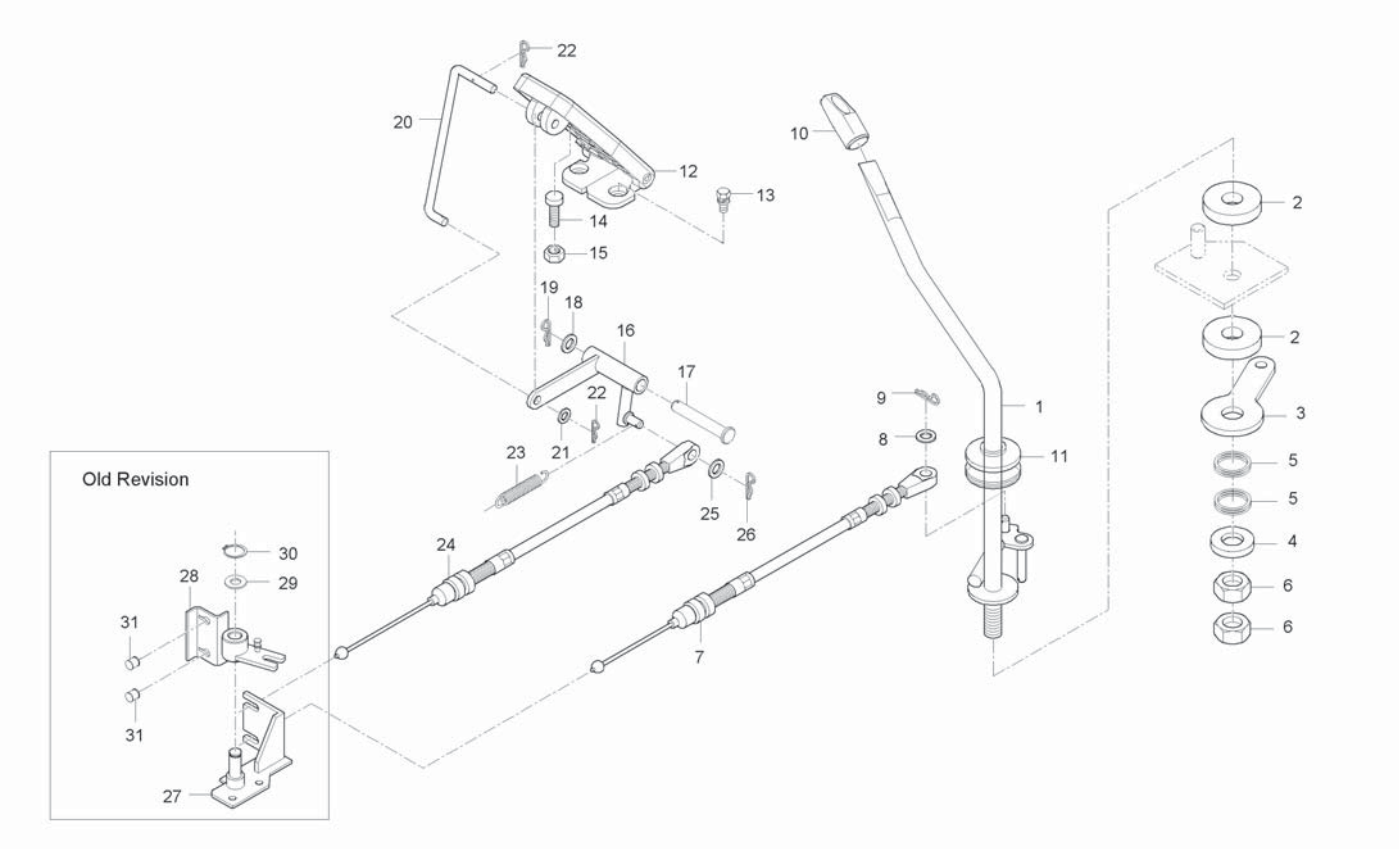

A : CK35-EU , B : CK35H-EU

No.	Part Number	Desciption	Q'TY A	Q'TY B	Q'TY C	Q'TY D	Q'TY E	I.C	Remark
1	T2185-60085	LEVER, ACCEL	1 ~GT8100014						
1	T2198-60081	LEVER, ACCEL	1 ~HT8100038					<-X->	
1	T2198-60081BB	LEVER, ACCEL	1 HT8100039~					<-X->	
2	T2185-60091	LINING	2						
3	T2198-60111	PLATE, FRICTION	1						
4	04013-50120	WASHER, PLAIN	1						
5	T4835-17241	SPRING	2						
6	02174-50120	NUT	2						
7	T2185-60023	CABLE, THROTTL LEVER	1 ~GT8100014						
7	T2198-60021	CABLE, THROTTL LEVER	1 GT8100015~					<-X->	
8	04013-50060	WASHER, PLAIN	1						
9	05525-50600	PIN, SNAP	1						
10	T2615-60142	GRIP, THROTTLE LEVER	1 ~GT8100014						
10	T4125-60141	GRIP, THROTTLE LEVER	1 GT8100015~					<-X->	
11	T4625-65571	JABARA	1						
12	T2185-60131	PEDAL, ACCELERATOR	1						
13	01025-50616	BOLT, WASHER	2						
14	T2350-55881	BOLT, ADJUSTING	1						
15	02114-50080	NUT	1						

----> Old replace New
<-X-> Not interchangeable
<-O-> Interchangeable with another part(s)
<---- New replace Old
<---> Interchangeable

CK30M-T860A

ACCELERATOR GROUP

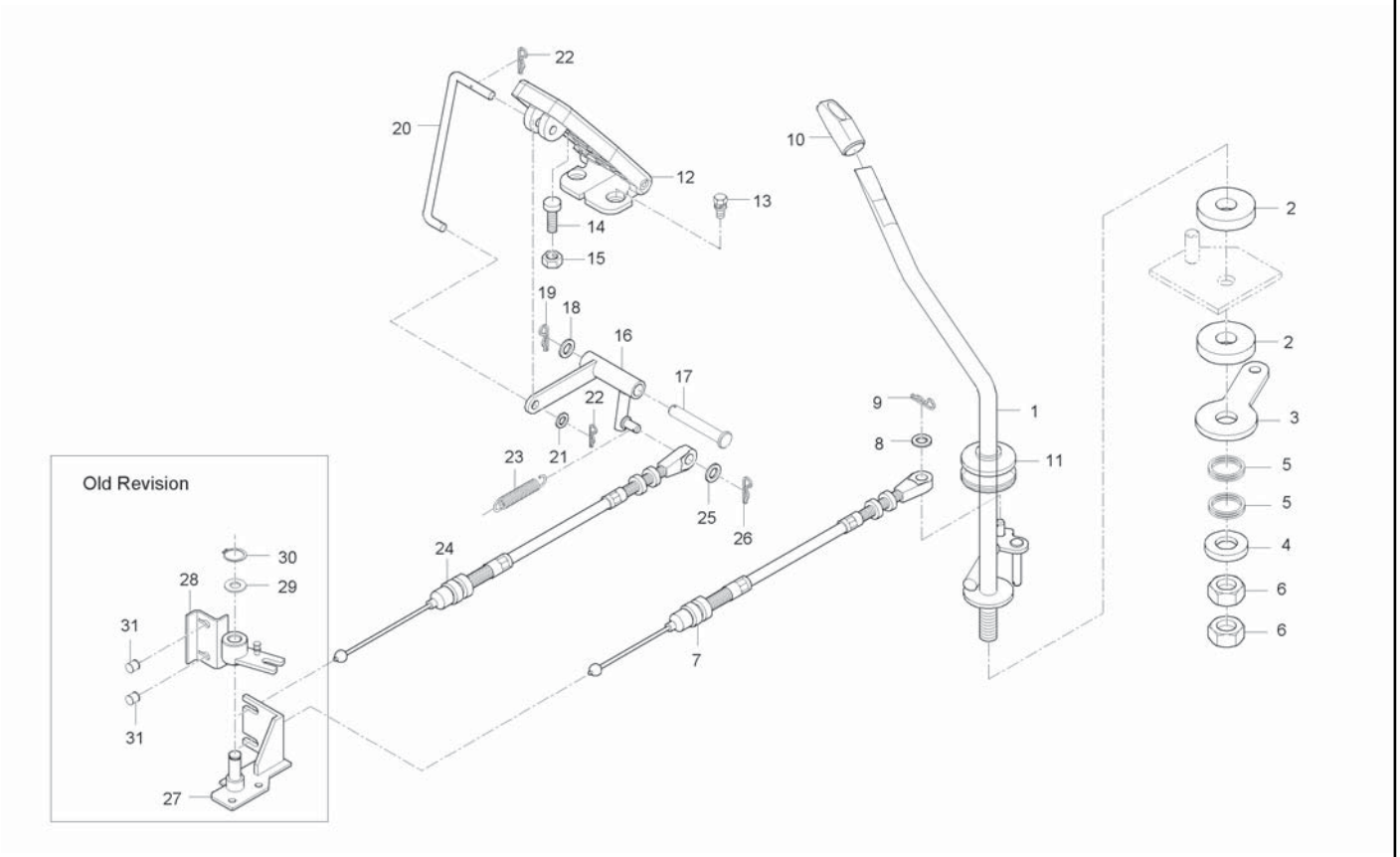

A : CK35-EU , B : CK35H-EU

No.	Part Number	Desciption	Q'TY A	Q'TY B	Q'TY C	Q'TY D	Q'TY E	I.C	Remark
16	T2185-60151	LINK	1 ~GT8100014						
16	T2185-60152	LINK	1 GT8100015~					<-X->	
17	05122-50865	JOINT PIN	1						
18	04013-50080	WASHER	1						
19	05525-50080	PIN, SNAP	1						
20	T2185-60161	ROD, ACCEL	1						
21	04013-50060	WASHER, PLAIN	1						
22	05525-50600	PIN, SNAP	2						
23	T2350-60131	SPRING	1						
24	T2185-60034	CABLE, ACCEL PEDAL	1						
25	04013-50060	WASHER, PLAIN	1						
26	05525-50600	PIN, SNAP	1						
27	T4686-60082	BRACKET, ACCEL	1						
28	T2185-60141	LEVER, ACCEL	1						
29	04011-50120	WASHER, PLAIN	1						
30	04612-00120	SNAP RING	1						
31	T4682-55801	GROMMET	2						

----> Old replace New
<-X-> Not interchangeable
<-O-> Interchangeable with another part(s)
<---- New replace Old
<---> Interchangeable

CT230-T860A

ACCELERATOR GROUP

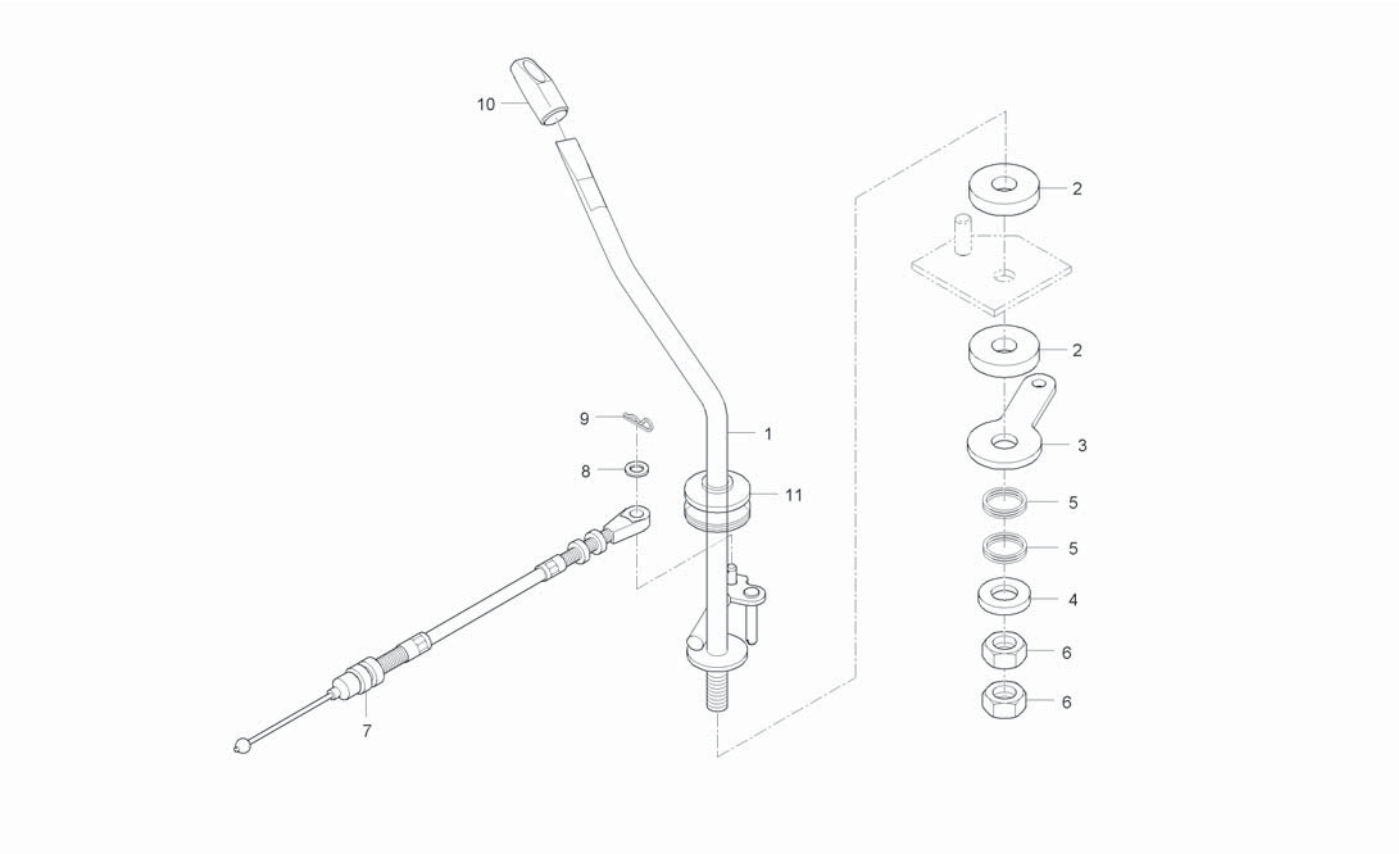

A : CK35-EU , B : CK35H-EU

No.	Part Number	Desciption	Q'TY A	Q'TY B	Q'TY C	Q'TY D	Q'TY E	I.C	Remark
1	T2198-60081	LEVER, ACCEL		1 ~HT8900076					
1	T2198-60081BB	LEVER, ACCEL		1 JT8900001~				<-X->	
2	T2185-60091	LINING		2					
3	T2198-60111	PLATE, FRICTION		1					
4	04013-50120	WASHER, PLAIN		1					M12
5	T4835-17241	SPRING		2					
6	02174-50120	NUT		2					M12*P1.25
7	T2198-60021	CABLE, THROTTL LEVER		1					
8	04013-50060	WASHER, PLAIN		1					M6
9	05525-50600	PIN, SNAP		1					DIA1.2
10	T4125-60141	GRIP, THROTTLE LEVER		1					
11	T4625-65571	JABARA		1					

----> Old replace New
<-X-> Not interchangeable
<-O-> Interchangeable with another part(s)
<---- New replace Old
<---> Interchangeable

CK30HE-T870A

INSTRUMENT COVER GROUP

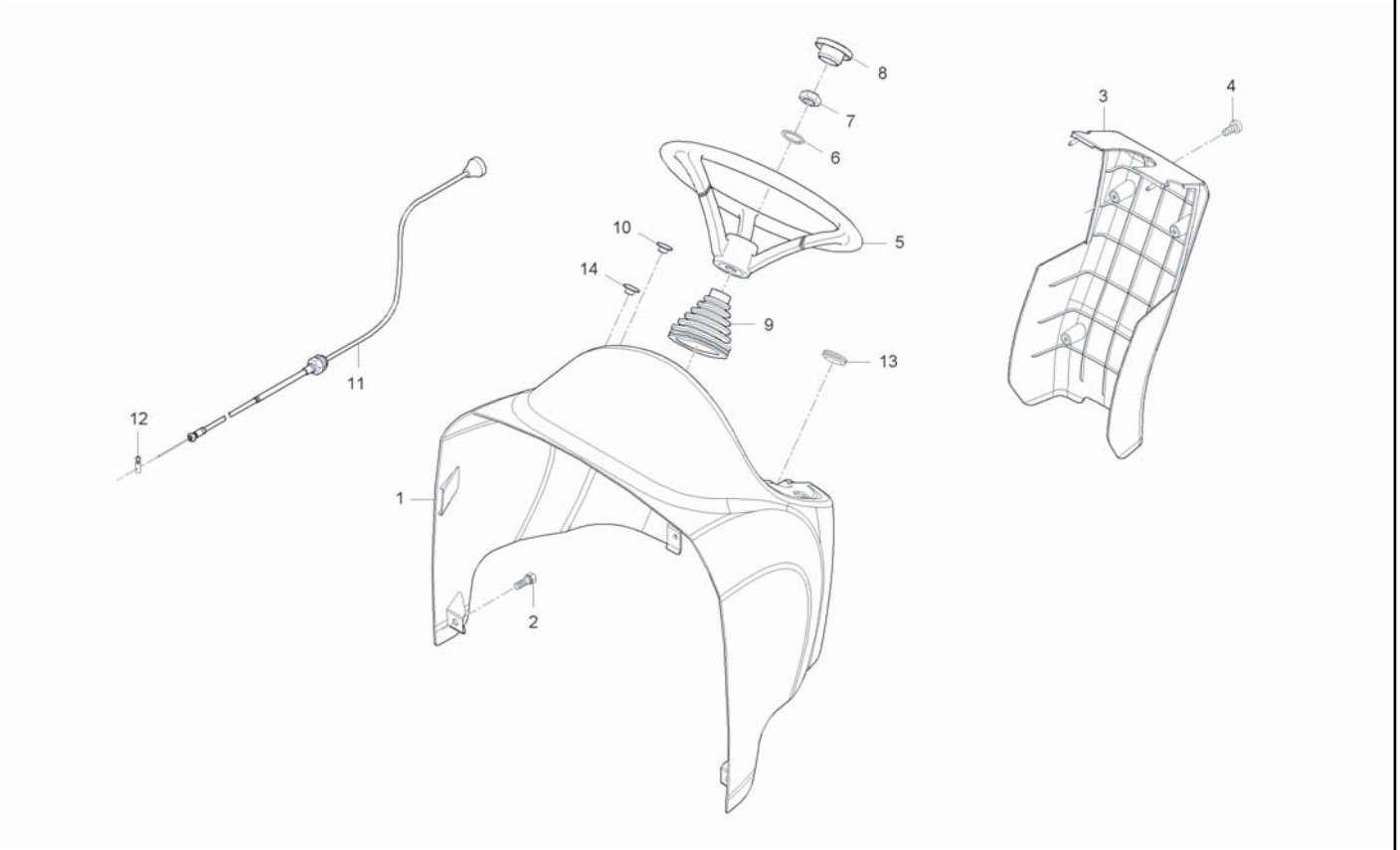

A : CK35-EU , B : CK35H-EU

No.	Part Number	Desciption	Q'TY A	Q'TY B	Q'TY C	Q'TY D	Q'TY E	I.C	Remark
1	T2185-55313	COVER, INSTRUMENT UP		1					
2	01025-50620	BOLT, WASHER		6					M6*P1.0
3	T2185-55322	COVER, INSTRUMENT LWR		1 ~HT8900026					
3	T2185-55323	COVER(LOWER),INSTRUMENT		1 ~HT8900076				<-O->	
3	T2185-55323BB	COVER, INSTRUMENT		1 JT8900001~				<-X->	
4	01025-50620	BOLT, WASHER		4					M6*P1.0
5	T2350-55452	HANDLE		1					
6	04512-50120	WASHER, SPRING		1					M12
7	02176-50120	NUT		1					M12*1.25
8	T2351-55462	CAP, HANDLE		1					
9	T2185-55671	JABARA, HANDLE		1					
10	T4625-29291	PLUG		1					
11	T2185-55682	CABLE, ENGINE STOP		1					
12	84612-3473-0	HOLDER WIRE,DECOMPRESS		1					
13	T4682-55421	CAP 3, SHUTTLE LEVER		1					
14	T4340-31141	PLUG		1					

----> Old replace New
<-X-> Not interchangeable
<-O-> Interchangeable with another part(s)

<---- New replace Old
<---> Interchangeable

CK30HE-T875A

INSTRUMENT COVER GROUP

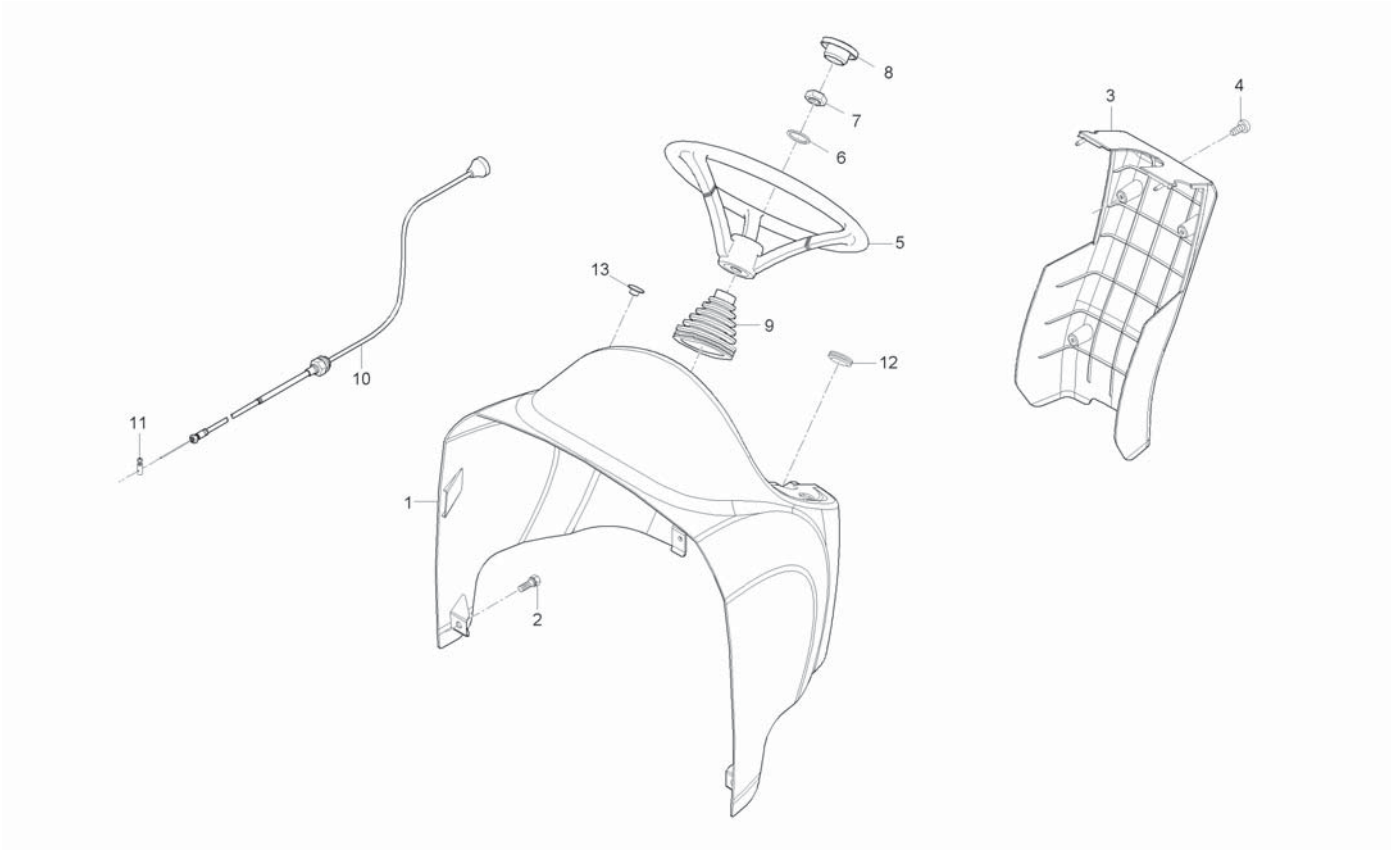

A : CK35-EU , B : CK35H-EU

No.	Part Number	Desciption	Q'TY A	Q'TY B	Q'TY C	Q'TY D	Q'TY E	I.C	Remark
1	T2185-55313	COVER, INSTRUMENT UP		1 ~HT8900076					
1	T2185-55313BB	COVER(UPPER),INSTRUMENT		1 JT8900001~				<-X->	
2	01025-50620	BOLT, WASHER		6					M6*P1.0
3	T2185-55322	COVER, INSTRUMENT LWR		1 ~HT8900026					
3	T2185-55323	COVER(LOWER),INSTRUMENT		1 ~HT8900076				<-0->	
3	T2185-55323BB	COVER, INSTRUMENT		1 JT8900001~				<-X->	
4	01025-50620	BOLT, WASHER		4					M6*P1.0
5	T2350-55452	HANDLE		1					
5	T2350-55453	HANDLE		1				<--->	
6	04512-50120	WASHER, SPRING		1					M12
7	02176-50120	NUT		1					M12*1.25
8	T2350-55462	CAP, HANDLE		1					
9	T2185-55671	JABARA, HANDLE		1					
10	T2185-55682	CABLE, ENGINE STOP		1					
11	84612-3473-0	HOLDER WIRE,DECOMPRESS		1					
12	T4682-55421	CAP 3, SHUTTLE LEVER		1					
13	T4340-31141	PLUG		1					

----> Old replace New
<-X-> Not interchangeable
<-0-> Interchangeable with another part(s)
<---- New replace Old
<---> Interchangeable

CK30ME-T875A

INSTRUMENT COVER GROUP

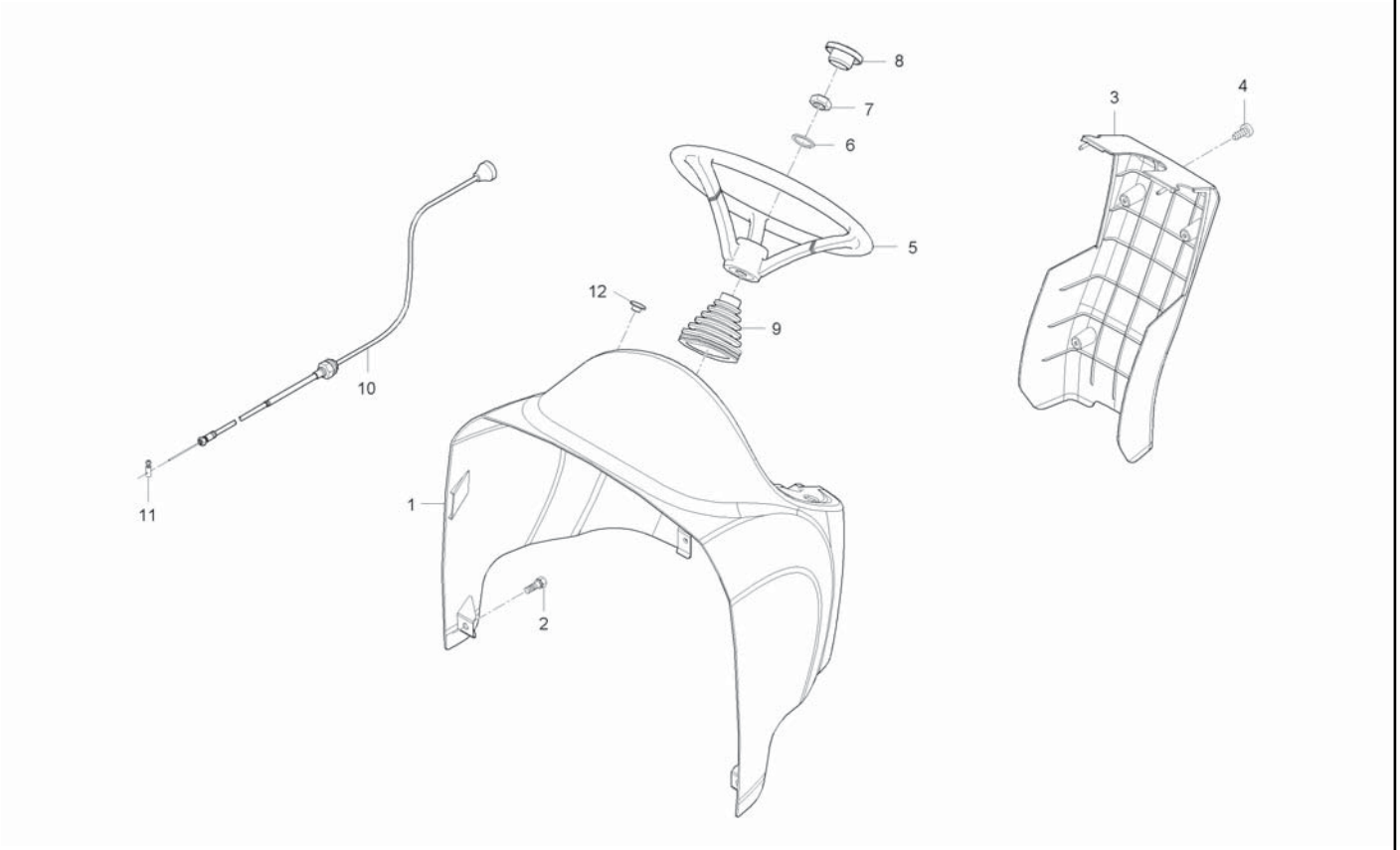

A : CK35-EU , B : CK35H-EU

No.	Part Number	Desciption	Q'TY A	Q'TY B	Q'TY C	Q'TY D	Q'TY E	I.C	Remark
1	T2185-55313	COVER, INSTRUMENT UP	1 ~HT8100038						
1	T2185-55313BB	COVER(UPPER),INSTRUMENT	1 HT8100039~					<-X->	
2	01025-50620	BOLT, WASHER	6						
3	T2185-55322	COVER, INSTRUMENT LWR	1 ~HT8100016						
3	T2185-55323	COVER(LOWER),INSTRUMENT	1 ~HT8100038					<-0->	
3	T2185-55323BB	COVER, INSTRUMENT	1 HT8100039~					<-X->	
4	01025-50620	BOLT, WASHER	4						
5	T2350-55452	HANDLE	1						
5	T2350-55453	HANDLE	1					<--->	
6	04512-50120	WASHER, SPRING	1						
7	02176-50120	NUT	1						
8	T2350-55462	CAP, HANDLE	1						
9	T2185-55671	JABARA, HANDLE	1						
10	T2185-55682	CABLE, ENGINE STOP	1						
11	84612-3473-0	HOLDER WIRE,DECOMPRESS	1						
12	T4340-31141	PLUG	1						

----> Old replace New
<-X-> Not interchangeable
<-0-> Interchangeable with another part(s)
<---- New replace Old
<---> Interchangeable

CK30M-T880-1A

FENDER GROUP

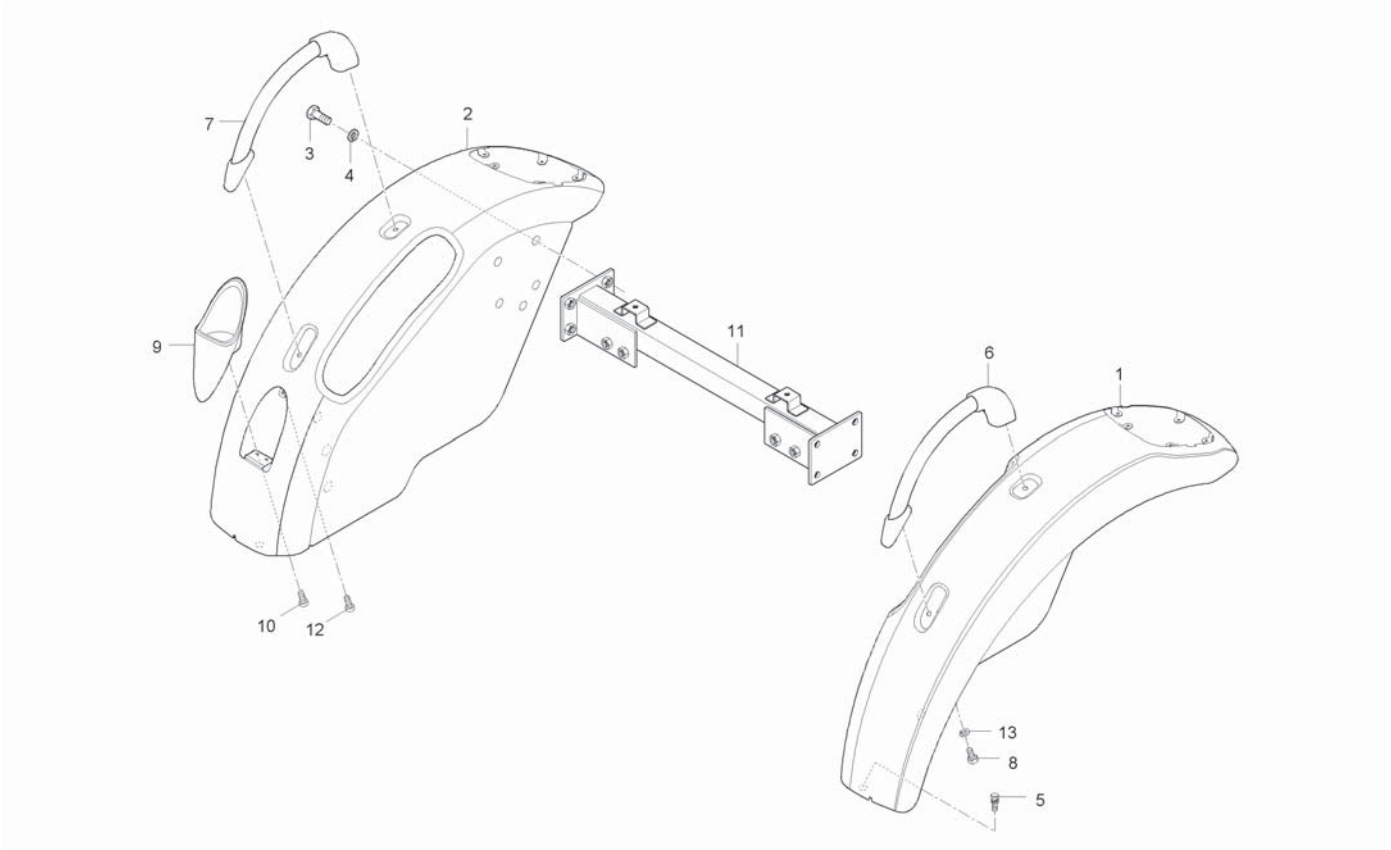

A : CK35-EU , B : CK35H-EU

No.	Part Number	Desciption	Q'TY A	Q'TY B	Q'TY C	Q'TY D	Q'TY E	I.C	Remark
1	T2185-95013	FENDER ASSY, LH	1	1					
2	T2185-95023	FENDER ASSY, RH	1	1					
3	01173-51430	BOLT	8	8					M14P1.5*30
4	04512-50140	WASHER, SPRING	8	8					
5	01125-50820	BOLT, WASHER	4	4					M8*P1.25
6	T2350-95082	GRIP, FENDER LH	1 ~HT8100038	1 ~HT8900076					
6	T2360-95081	GRIP FENDER	1	1				<-0->	
6	T2350-95082BB	GRIP, FENDER LH	1 ~HT8100044	1 ~JT8900085				<-X->	
6	T2360-95081	GRIP FENDER	1 JT8100001~	1 KT8900001~				<-0->	
7	T2350-95092	GRIP, FENDER RH	1 ~HT8100038	1 ~HT8900076					
7	T2360-95091	GRIP FENDER (RH)	1	1				<-0->	
7	T2350-95092BB	GRIP, FENDER RH	1 ~HT8100044	1 ~JT8900085				<-X->	
7	T2360-95091	GRIP FENDER (RH)	1 JT8100001~	1 KT8900001~				<-0->	
8	01133-51016	BOLT, WASHER	4	4					M10*P1.25
8	76KP-1308-1	PLUG, OIL DRAIN	4	4				<----	
8	01135-51020	BOLT, WASHER	4	4				<-0->	M10*1.25
8	01774-51016	BOLT, FLANGE	4	4				<-0->	
9	T2185-95052	CUP, HOLDER	1 ~HT8100038	1 ~HT8900076					
9	T2185-95052BB	CUP, HOLDER	1 HT8100039~	1 JT8900001~				<-X->	

----> Old replace New
<-X-> Not interchangeable
<-0-> Interchangeable with another part(s)
<---- New replace Old
<---> Interchangeable

CK30M-T880-1A

FENDER GROUP

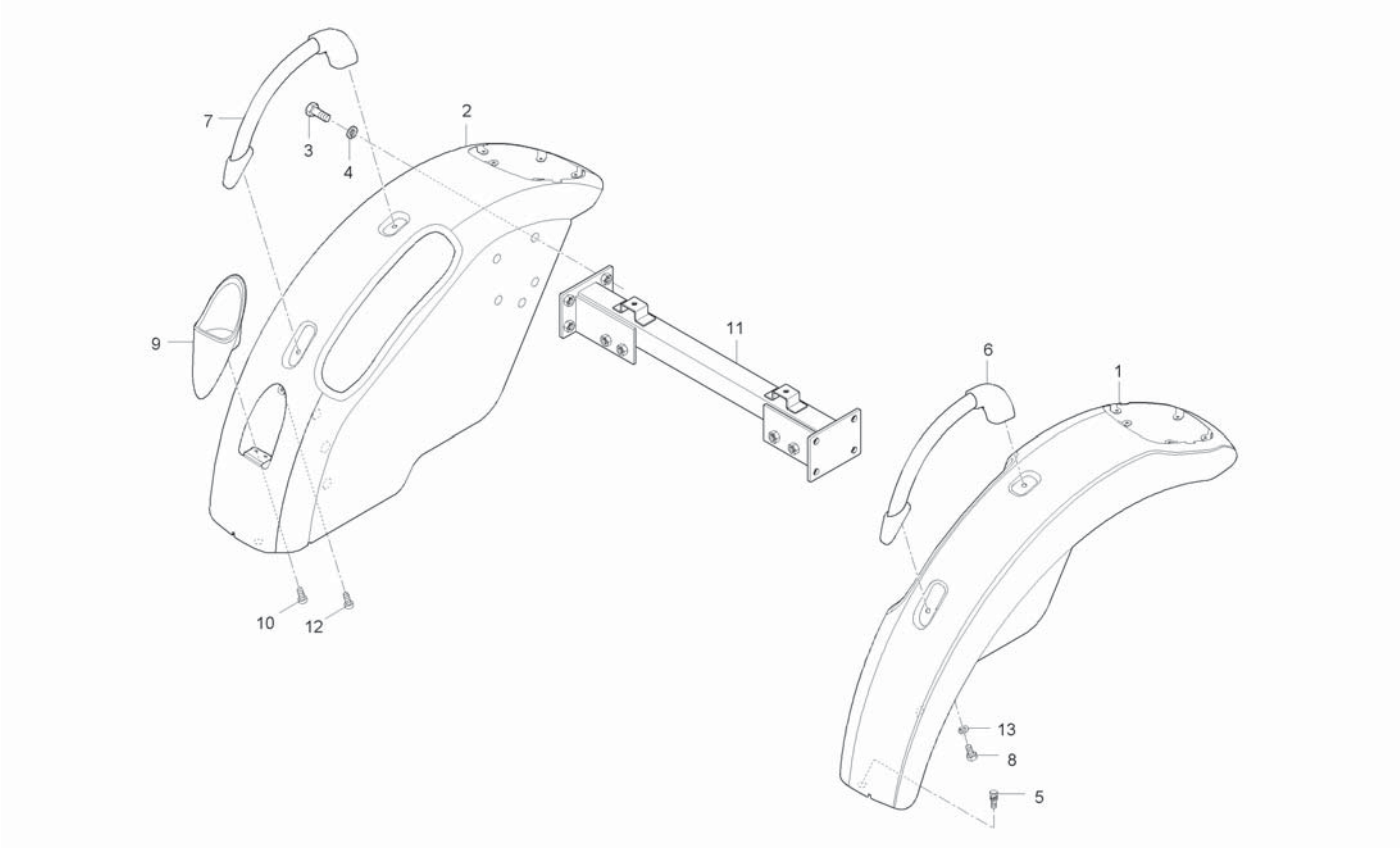

A : CK35-EU , B : CK35H-EU

No.	Part Number	Desciption	Q'TY A	Q'TY B	Q'TY C	Q'TY D	Q'TY E	I.C	Remark
10	38430-1827-1	SCREW	2	2					
11	T2185-95214	SUPPORT, FENDER	1	1					
12	38240-1883-1	SCREW	1	1					
13	04512-50100	WASHER, SPRING	4	4					M10

----> Old replace New
<-X-> Not interchangeable
<-O-> Interchangeable with another part(s)
<---- New replace Old
<---> Interchangeable

CK30HE-T890A

SEAT FLOOR GROUP

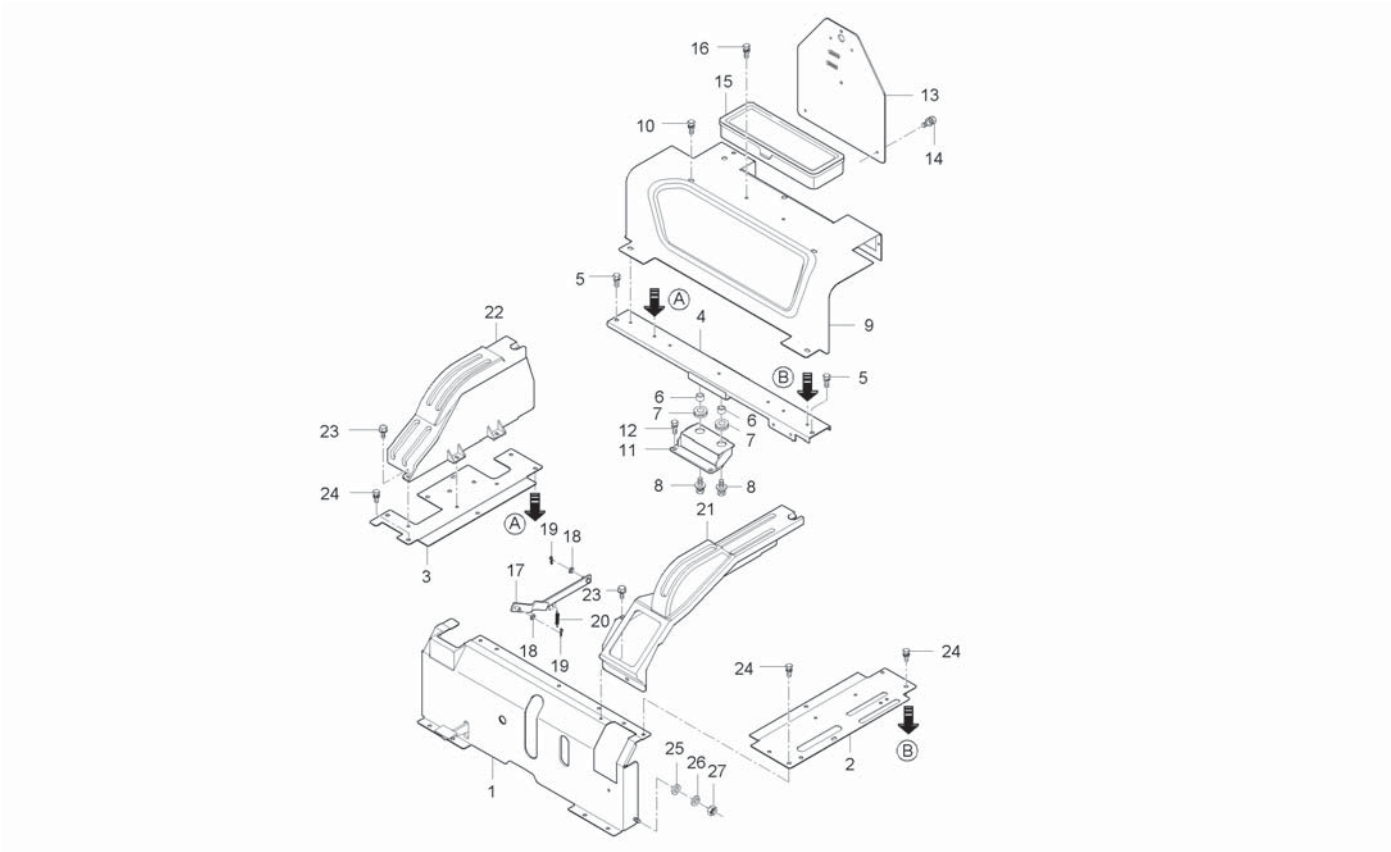

A : CK35-EU , B : CK35H-EU

No.	Part Number	Desciption	Q'TY A	Q'TY B	Q'TY C	Q'TY D	Q'TY E	I.C	Remark
1	T2195-70415	COVER, SEAT FR		1					
1	T2195-70416	COVER, SEAT FRONT		1				<--->	
2	T2185-70427	PLATE, LEVER GUIDE LH		1					
3	T2185-70443	PLATE, LEVER GUIDE RH		1 ~HT8900076					
3	T2185-70444	PLATE(LH),LEVER GUIDE		1 JT8900001~				<-0->	
4	T2185-70455	SUPPORT, SEAT FLOOR		1					
5	01125-50820	BOLT, WASHER		2					M8*P1.25
6	T2350-50421	SPACER, RADIATOR SUPPORT		2					
7	T2350-50431	GROMMET		2					
8	01127-50825	BOLT		2					
9	T2195-70462	COVER, RR		1					
10	01125-50820	BOLT, WASHER		4					M8*P1.25
11	T2185-70471	BRACKET, SUPPORT		1 ~HT8900076					
11	T2185-70471BB	BRACKET, SUPPORT		1 JT8900001~				<-X->	
12	01125-50816	BOLT, WASHER		2					M8*P1.25
13	T2185-70481	BRACKET, SMV		1					
13	T2185-70482	BRACKET, SMV		1				<----	
14	01125-50820	BOLT, WASHER		2					M8*P1.25
15	T2350-70492	TOOL BOX		1					

----> Old replace New
<-X-> Not interchangeable
<-0-> Interchangeable with another part(s)
<---- New replace Old
<---> Interchangeable

CK30HE-T890A

SEAT FLOOR GROUP

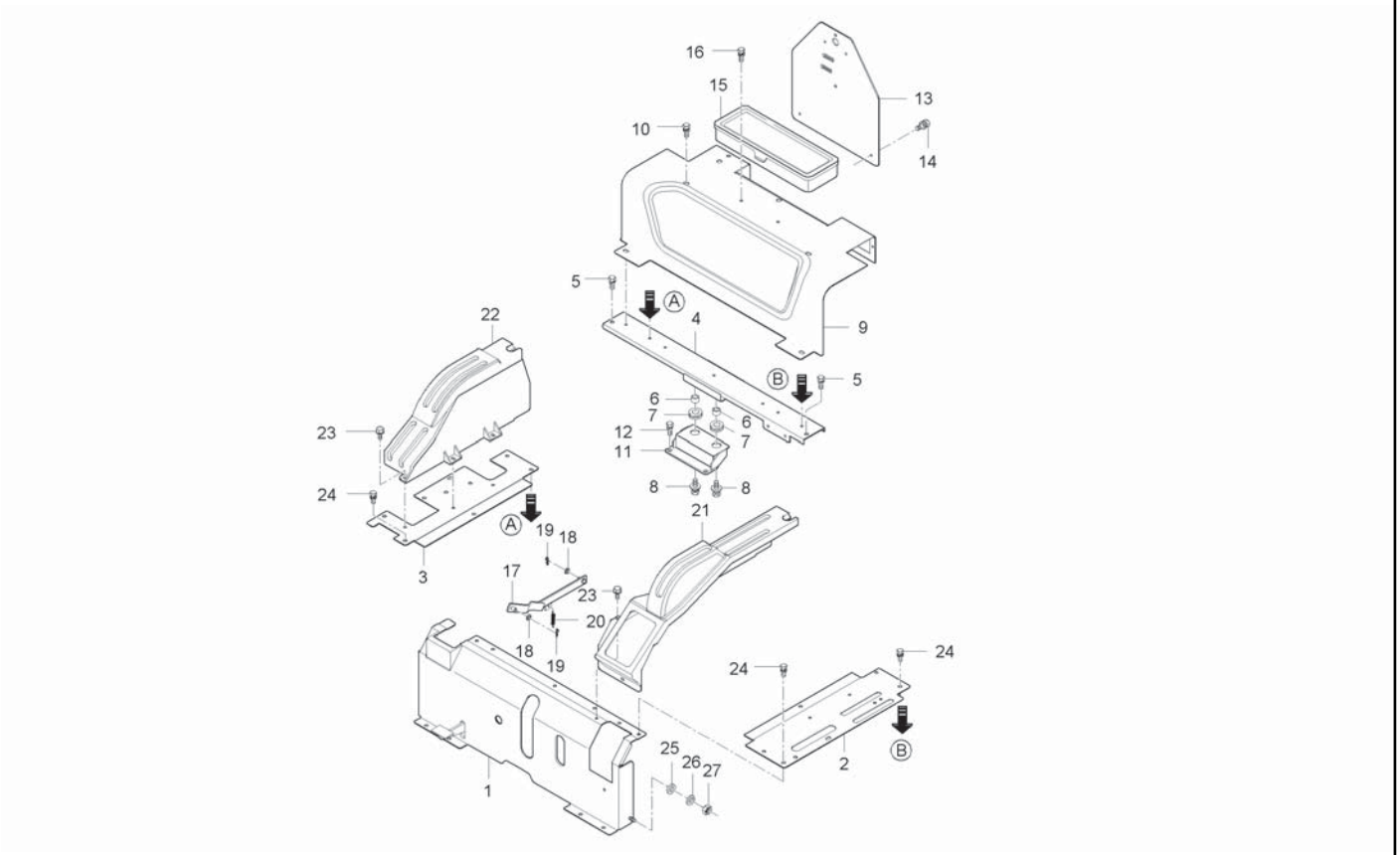

A : CK35-EU , B : CK35H-EU

No.	Part Number	Desciption	Q'TY A	Q'TY B	Q'TY C	Q'TY D	Q'TY E	I.C	Remark
16	01125-50820	BOLT, WASHER		2					M8*P1.25
16	01754-50816	BOLT, FLANGE		2				<--->	M8*P1.25
17	T2195-65011	ROD, DIFFERENTIAL LOCK		1 ~HT8900076					
17	T2195-65011BB	ROD, DIFFERENTIAL LOCK		1 JT8900001~				<-X->	
18	04013-50080	WASHER		2					M8
19	05525-50800	PIN, SNAP		2					
20	T2185-66671	SPRING, DIFFERENTIAL LOCK		1					
21	T2195-95424	GUIDE, LEVER LH		1 ~HT8900076					
21	T2195-95424BB	GUIDE, LEVER LH		1 JT8900001~				<-X->	
22	T2185-95432	GUIDE, LEVER RH		1 ~HT8900076					
22	T2185-95432BB	GUIDE, LEVER RH		1 JT8900001~				<-X->	
23	T4625-55431	FLANGE BOLT		4					
24	01754-50816	BOLT, FLANGE		9					M8*P1.25
25	04013-50080	WASHER		2					M8
26	04512-50080	SPRING WASHER		2					M08
27	02156-50080	NUT		2					M8XP1.25

----> Old replace New
<-X-> Not interchangeable
<-O-> Interchangeable with another part(s)
<---- New replace Old
<---> Interchangeable

CK30ME-T890A

SEAT FLOOR GROUP

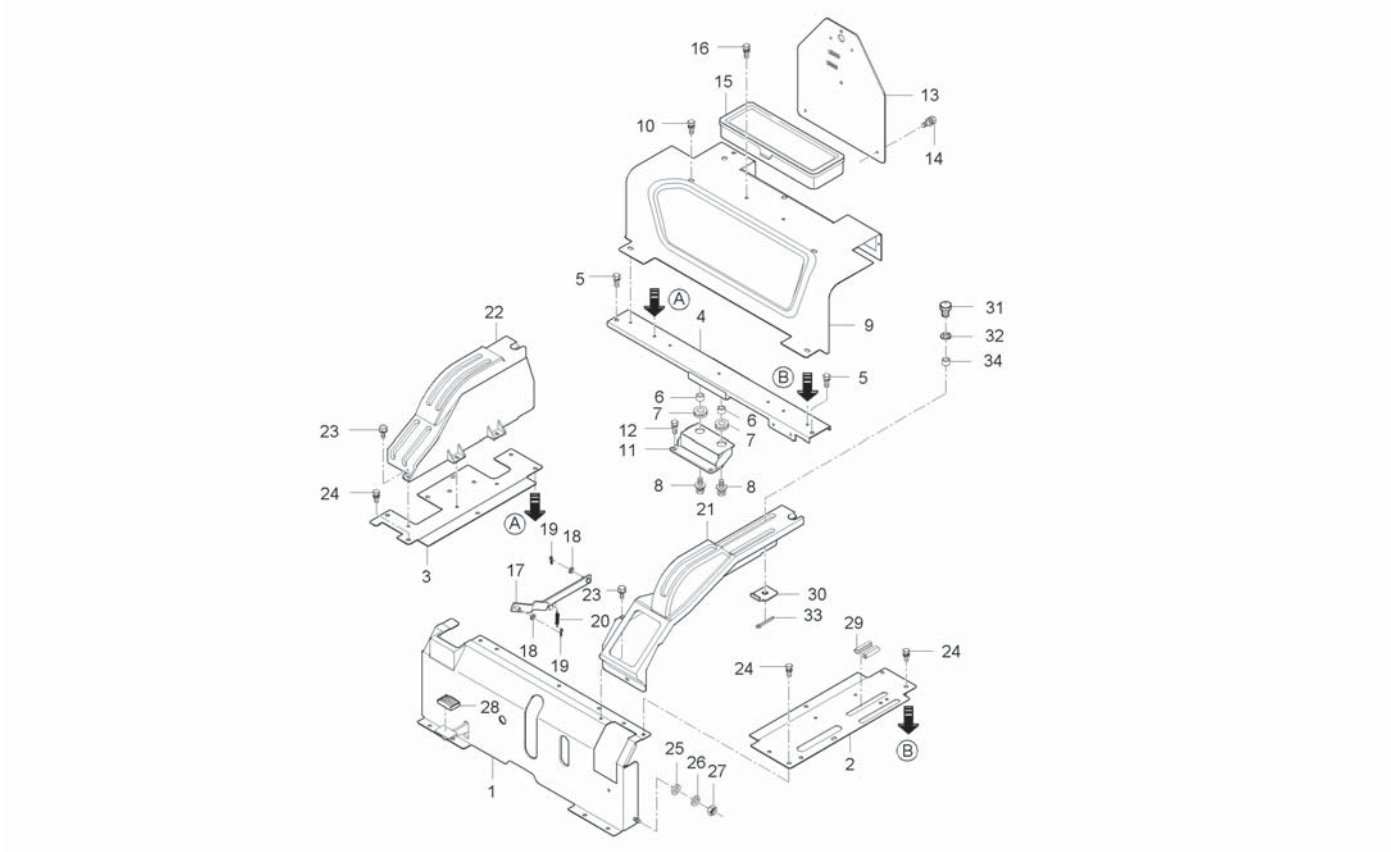

A : CK35-EU , B : CK35H-EU

No.	Part Number	Desciption	Q'TY A	Q'TY B	Q'TY C	Q'TY D	Q'TY E	I.C	Remark
1	T2181-70411	COVER, SEAT FR	1						
1	T2181-70413	COVER, SEAT FRONT	1					<--->	
2	T2185-70425	PLATE, LEVER GUIDE LH	1 ~GT8100064						
2	T2185-70427	PLATE, LEVER GUIDE LH	1 GT8100065~					<-0->	
3	T2185-70442	PLATE, LEVER GUIDE RH	1						
3	T2185-70443	PLATE, LEVER GUIDE RH	1 ~HT8100044					<----	
3	T2185-70444	PLATE(LH),LEVER GUIDE	1 JT8100001~					<-0->	
4	T2185-70455	SUPPORT, SEAT FLOOR	1						
5	01125-50820	BOLT, WASHER	2						
6	T2350-50421	SPACER, RADIATOR SUPPORT	2						
7	T2350-50431	GROMMET	2						
8	01127-50825	BOLT	2						
9	T2195-70462	COVER, RR	1						
10	01125-50820	BOLT, WASHER	4						
11	T2185-70471	BRACKET, SUPPORT	1 ~HT8100038						
11	T2185-70471BB	BRACKET, SUPPORT	1 HT8100039~					<-X->	
12	01125-50820	BOLT, WASHER	2						
12	01125-50816	BOLT, WASHER	2					<----	
12	01754-50816	BOLT, FLANGE	2					<--->	

----> Old replace New
<-X-> Not interchangeable
<-0-> Interchangeable with another part(s)
<---- New replace Old
<---> Interchangeable

CK30ME-T890A

SEAT FLOOR GROUP

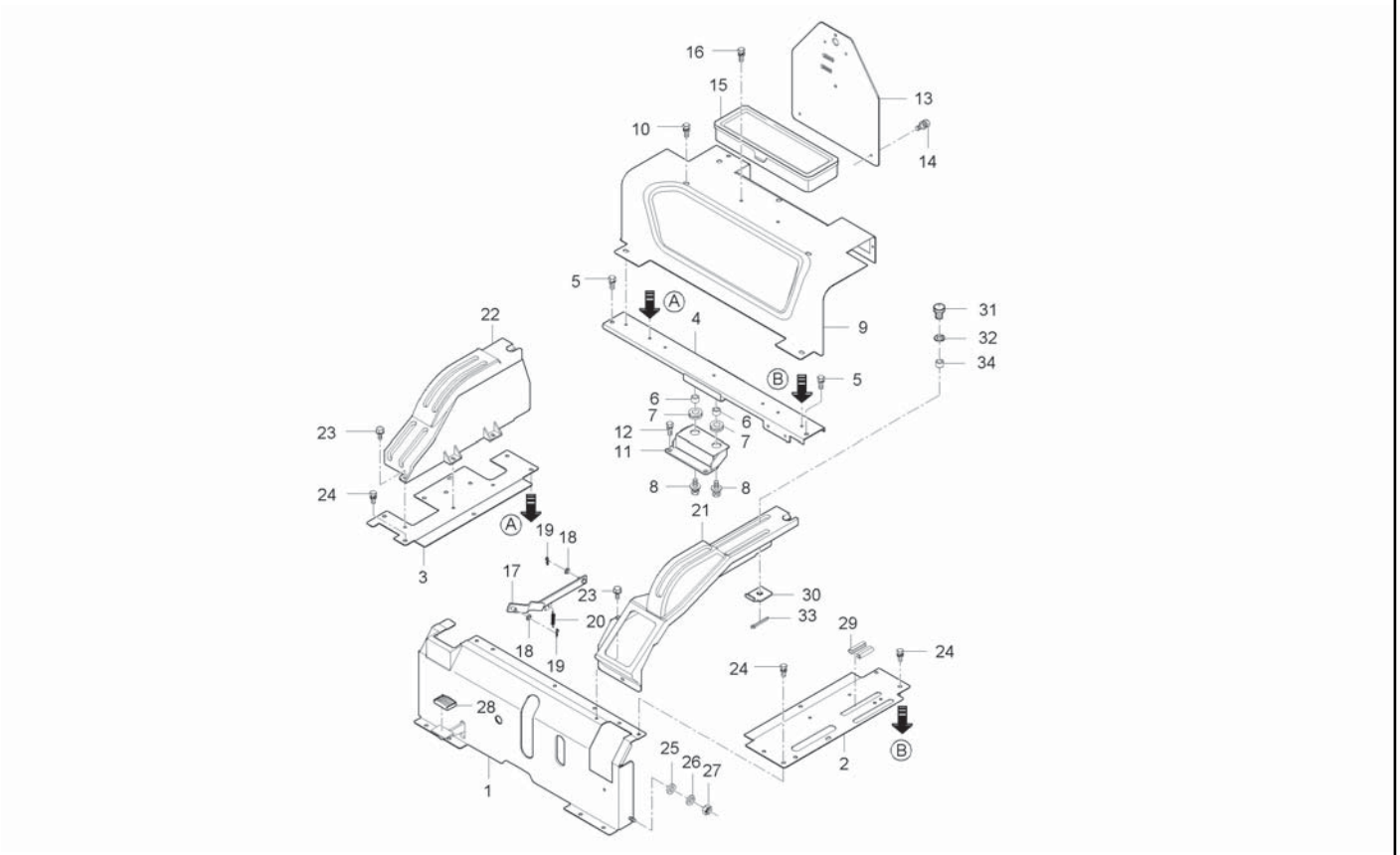

A : CK35-EU , B : CK35H-EU

No.	Part Number	Desciption	Q'TY A	Q'TY B	Q'TY C	Q'TY D	Q'TY E	I.C	Remark
13	T2185-70481	BRACKET, SMV	1						
13	T2185-70482	BRACKET, SMV	1					<----	
14	01125-50820	BOLT, WASHER	2						
15	T2350-70492	TOOL BOX	1						
16	01125-50820	BOLT, WASHER	2						
17	T2185-65012	ROD, DIFFERENTIAL LOCK	1						
17	T2185-65013	ROD, DIFFERENTIAL LOCK	1					<--->	
18	04013-50080	WASHER	2						
19	05525-50800	PIN, SNAP	2						
20	T2185-66671	SPRING, DIFFERENTIAL LOCK	1						
21	T2185-95423	GUIDE, LEVER LH	1						
21	T2185-95424	GUIDE, LEVER LH	1 ~HT8100038					<--->	
21	T2185-95424BB	GUIDE, LEVER	1 HT8100039~					<-X->	
22	T2185-95431	GUIDE, LEVER RH	1						
22	T2185-95432	GUIDE, LEVER RH	1 ~HT8100038					<--->	
22	T2185-95432BB	GUIDE, LEVER RH	1 HT8100039~					<-X->	
23	T4625-55431	FLANGE BOLT	4						
24	01125-50816	BOLT, WASHER	9						
25	04013-50080	WASHER	2						

----> Old replace New
<-X-> Not interchangeable
<-O-> Interchangeable with another part(s)
<---- New replace Old
<---> Interchangeable

CK30ME-T890A

SEAT FLOOR GROUP

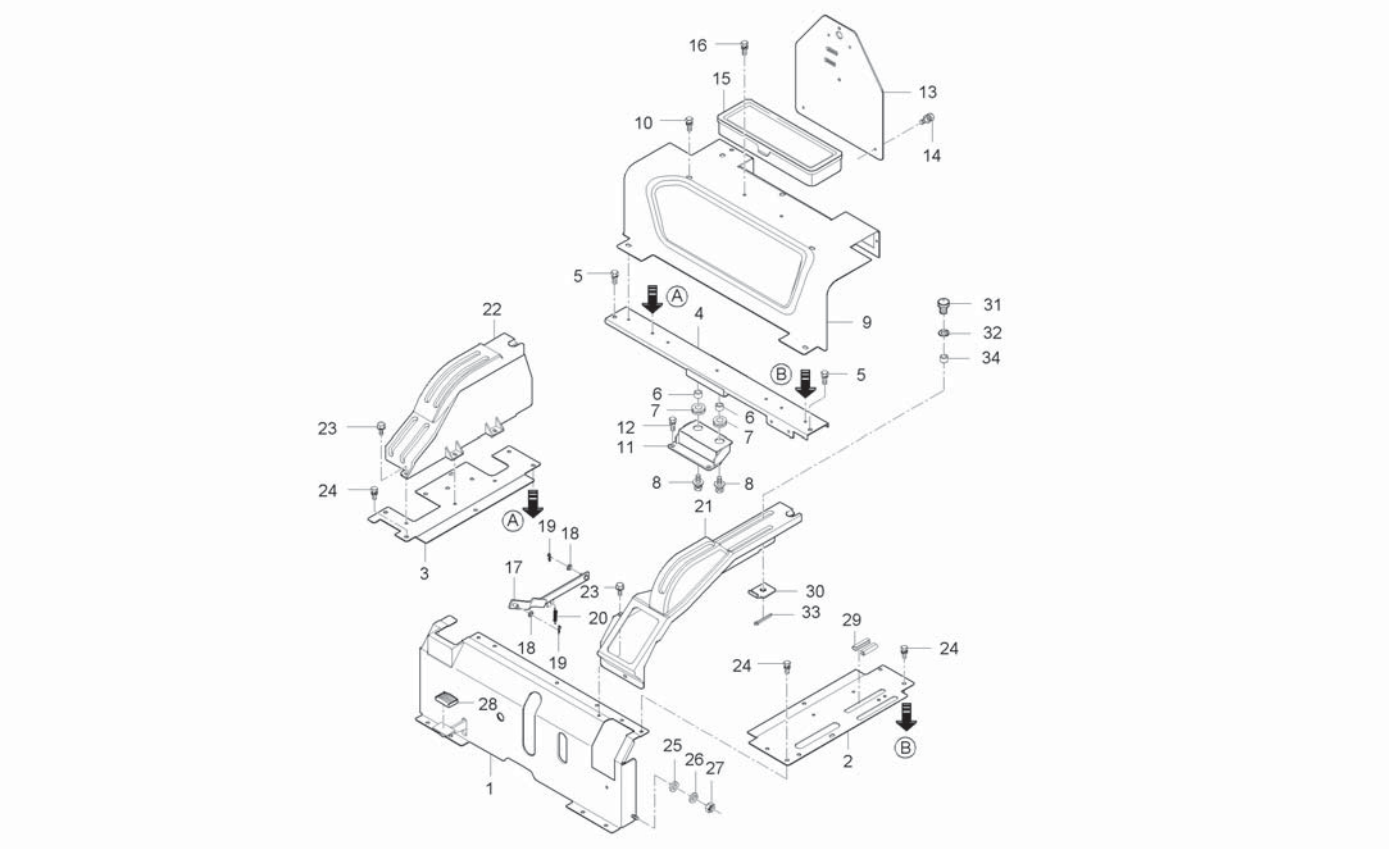

A : CK35-EU , B : CK35H-EU

No.	Part Number	Desciption	Q'TY A	B	C	D	E	I.C	Remark
26	04512-50080	SPRING WASHER	2						
27	02114-50080	NUT	2						
27	02156-50080	NUT	2					<--->	
28	T2350-26661	RUBBER, PEDAL	1						
29	T2185-70621	RUBBER	2						
30	T2350-95471	STOPPER	1						
30	T2350-95472	STOPPER	1					<--->	
31	55571-3238-1	BOLT, RESIN	1						
32	04015-50060	WASHER, PLAIN	1						
33	05511-50215	PIN, SPLIT	1						
34	T4520-83301	SPACER	1						

----> Old replace New
<-X-> Not interchangeable
<-O-> Interchangeable with another part(s)
<---- New replace Old
<---> Interchangeable

CK35HE-T895A

SEAT FLOOR GROUP

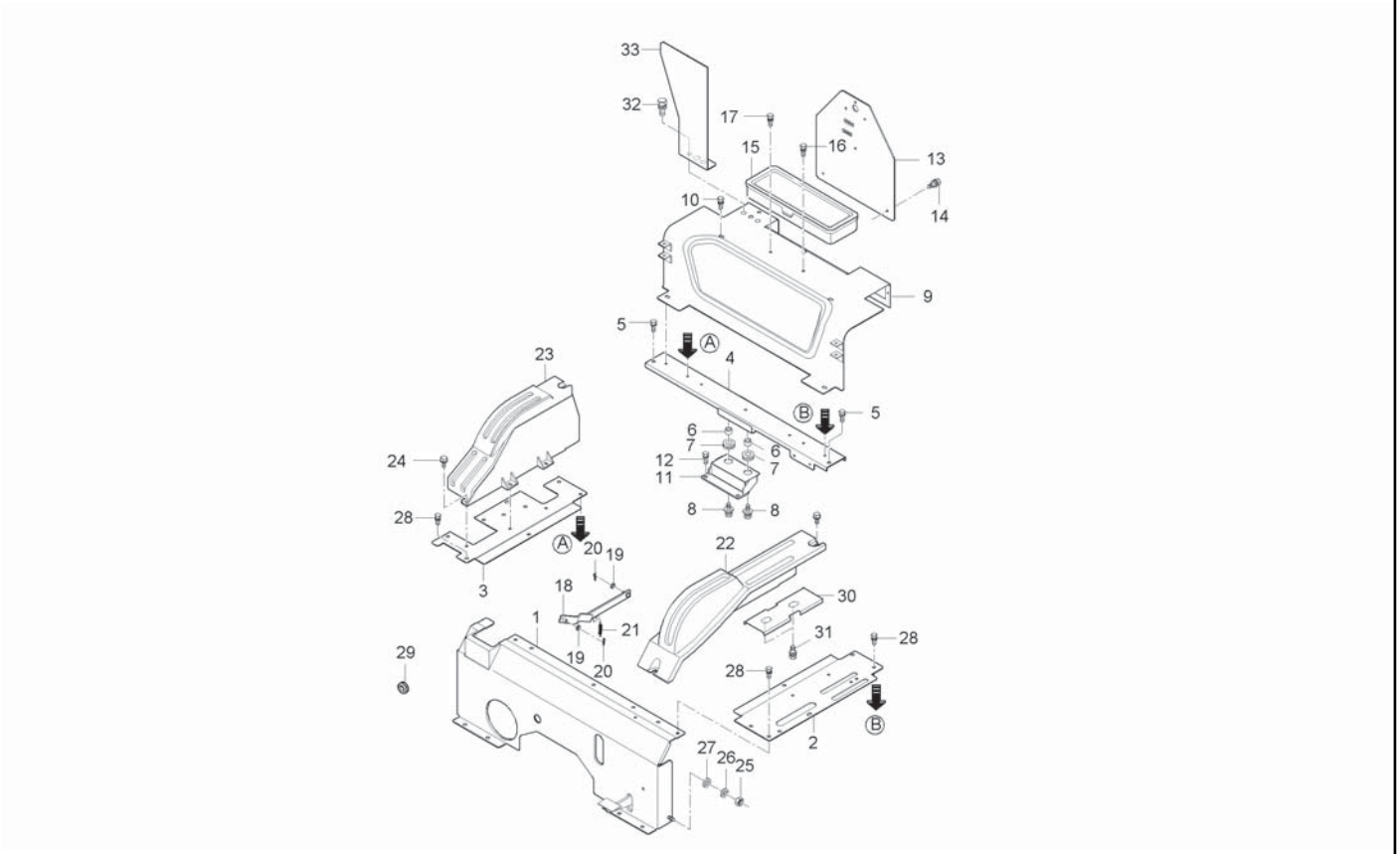

A : CK35-EU , B : CK35H-EU

No.	Part Number	Desciption	Q'TY A	Q'TY B	Q'TY C	Q'TY D	Q'TY E	I.C	Remark
1	T2195-70416	COVER, SEAT FRONT		1					
2	T2185-70427	PLATE, LEVER GUIDE LH		1					
3	T2185-70444	PLATE(LH),LEVER GUIDE		1					
4	T2185-70455	SUPPORT, SEAT FLOOR		1					
5	01125-50820	BOLT, WASHER		2					M8*P1.25
6	T2350-50421	SPACER, RADIATOR SUPPORT		2					
7	T2350-50431	GROMMET		2					
8	01127-50825	BOLT		2					
9	T2181-70461	COVER,REAR		1					
10	01125-50820	BOLT, WASHER		4					M8*P1.25
11	T2185-70471	BRACKET, SUPPORT		1					
12	01125-50816	BOLT, WASHER		2					M8*P1.25
13	T2185-70482	BRACKET, SMV		1					
14	01125-50820	BOLT, WASHER		2					M8*P1.25
15	T2350-70492	TOOL BOX		1					
16	01125-50820	BOLT, WASHER		2					M8*P1.25
17	01754-50816	BOLT, FLANGE		2					M8*P1.25
18	T2195-65011	ROD, DIFFERENTIAL LOCK		1					
19	04013-50080	WASHER		2					M8

----> Old replace New
<-X-> Not interchangeable
<-O-> Interchangeable with another part(s)
<---- New replace Old
<---> Interchangeable

CK35HE-T895A

SEAT FLOOR GROUP

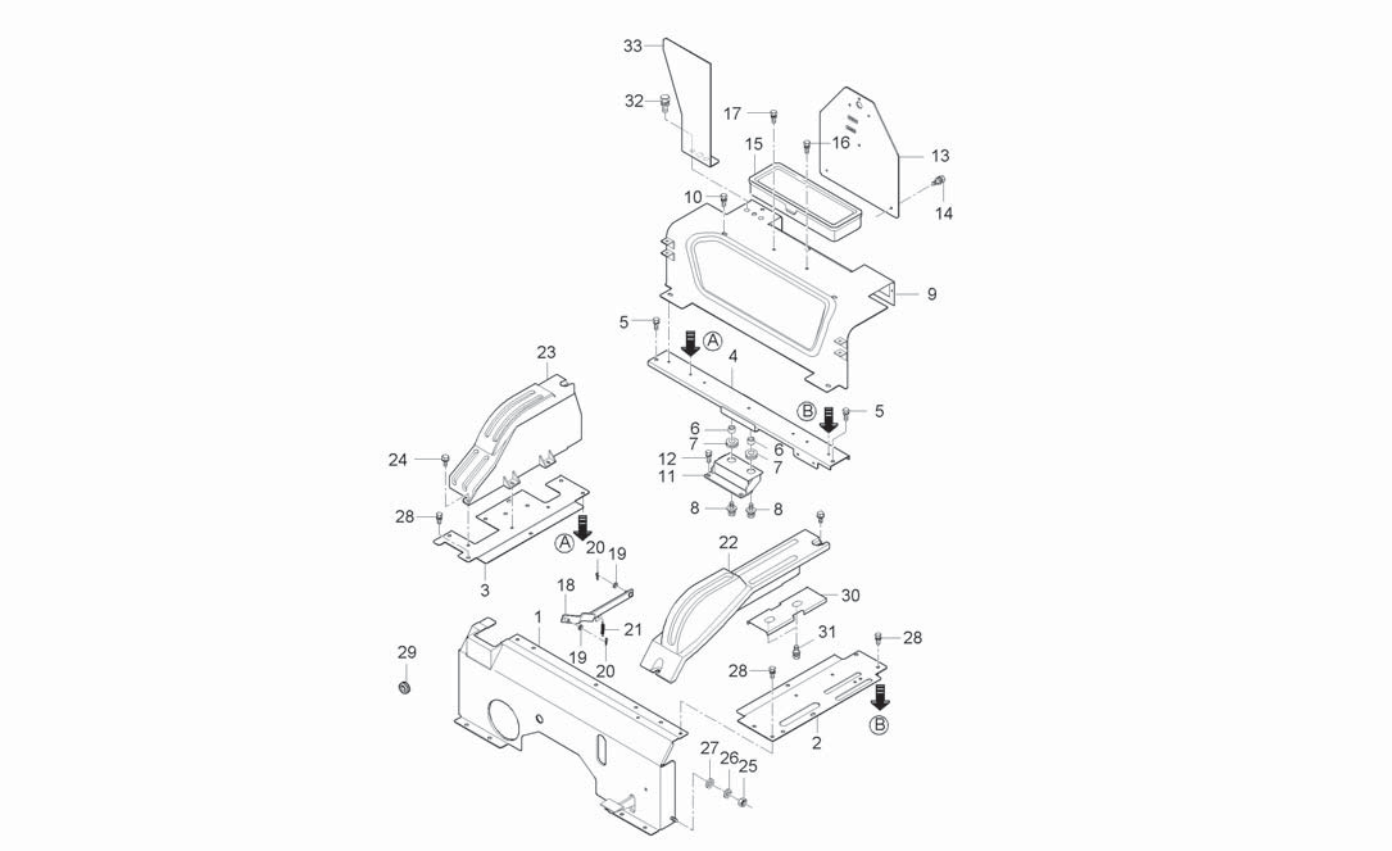

A : CK35-EU , B : CK35H-EU

No.	Part Number	Desciption	Q'TY A	Q'TY B	Q'TY C	Q'TY D	Q'TY E	I.C	Remark
20	05525-50800	PIN, SNAP		2					
21	T2185-66671	SPRING, DIFFERENTIAL LOCK		1					
22	T2195-95425	GUIDE, LEVER LH		1					
23	T2185-95432	GUIDE, LEVER RH		1					
24	T4625-55431	FLANGE BOLT		4					
25	02156-50080	NUT		2					M8XP1.25
26	04512-50080	SPRING WASHER		2					M08
27	04013-50080	WASHER		2					M8
28	01754-50816	BOLT, FLANGE		9					M8*P1.25
29	T2198-70471	GROMMET		1					
30	T2181-95431	SHIFT BRACKET		1					
30	T2181-95432	SHIFT BRACKET		1				<----	
31	01123-50816	BOLT, WASHER		2					M8*P1.25
32	01754-50816	BOLT, FLANGE		2					M8*P1.25
33	T2185-33751	SHIELD		1					

----> Old replace New
<-X-> Not interchangeable
<-O-> Interchangeable with another part(s)
<---- New replace Old
<---> Interchangeable

CK35ME-T895A

SEAT FLOOR GROUP

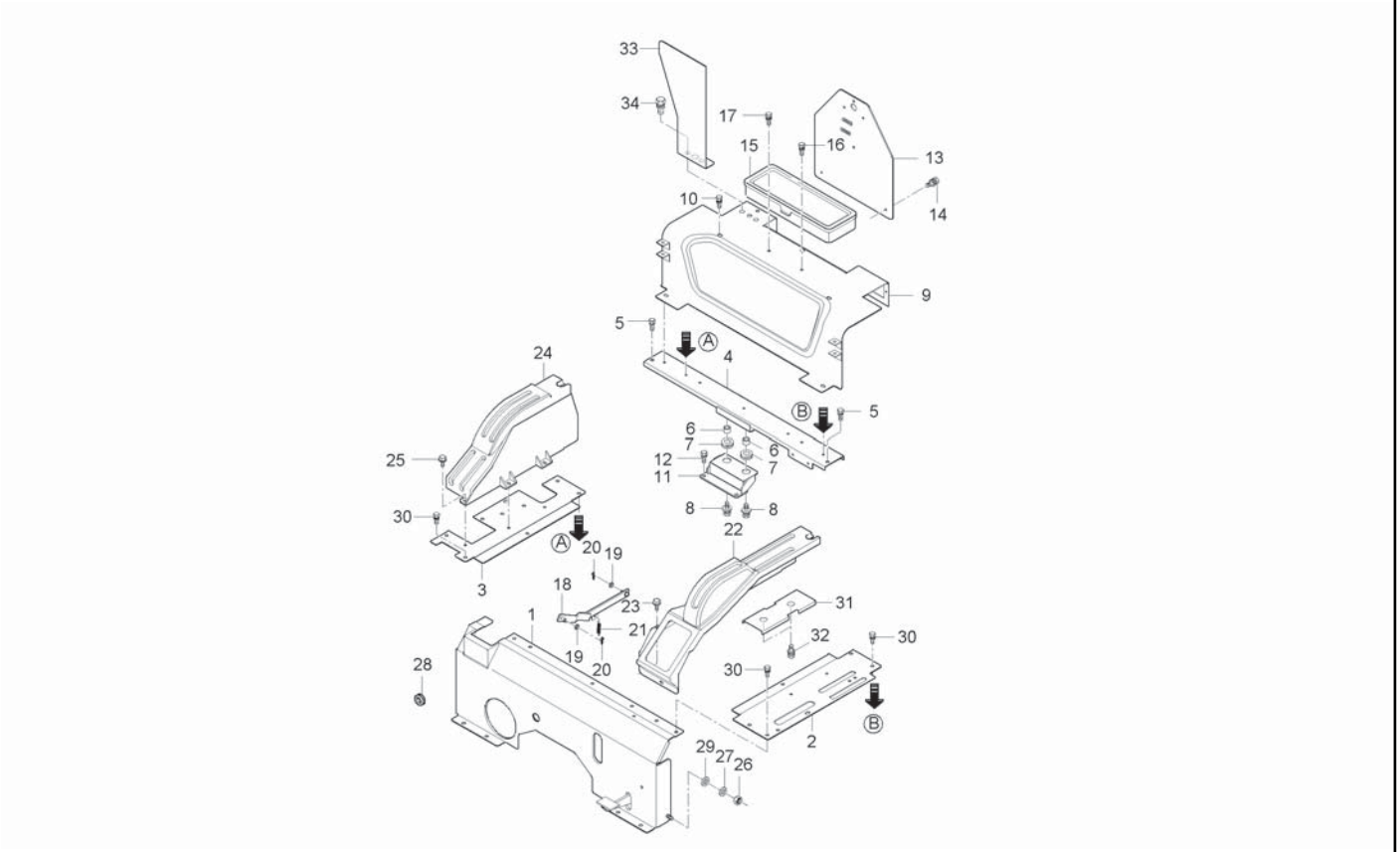

A : CK35-EU , B : CK35H-EU

No.	Part Number	Desciption	Q'TY A	Q'TY B	Q'TY C	Q'TY D	Q'TY E	I.C	Remark
1	T2181-70413	COVER, SEAT FRONT	1						
2	T2185-70427	PLATE, LEVER GUIDE LH	1						
3	T2185-70444	PLATE(LH),LEVER GUIDE	1						
4	T2185-70455	SUPPORT, SEAT FLOOR	1						
5	01125-50820	BOLT, WASHER	2						
6	T2350-50421	SPACER, RADIATOR SUPPORT	2						
7	T2350-50431	GROMMET	2						
8	01127-50825	BOLT	2						
9	T2181-70461	COVER,REAR	1						
10	01125-50820	BOLT, WASHER	4						
11	T2185-70471	BRACKET, SUPPORT	1						
12	01125-50816	BOLT, WASHER	2						
13	T2185-70482	BRACKET, SMV	1						
14	01125-50820	BOLT, WASHER	2						
15	T2350-70492	TOOL BOX	1						
16	01125-50820	BOLT, WASHER	2						
17	01754-50816	BOLT, FLANGE	2						
18	T2185-65013	ROD, DIFFERENTIAL LOCK	1						
19	04013-50080	WASHER	2						

----> Old replace New
<-X-> Not interchangeable
<-O-> Interchangeable with another part(s)
<---- New replace Old
<---> Interchangeable

CK35ME-T895A

SEAT FLOOR GROUP

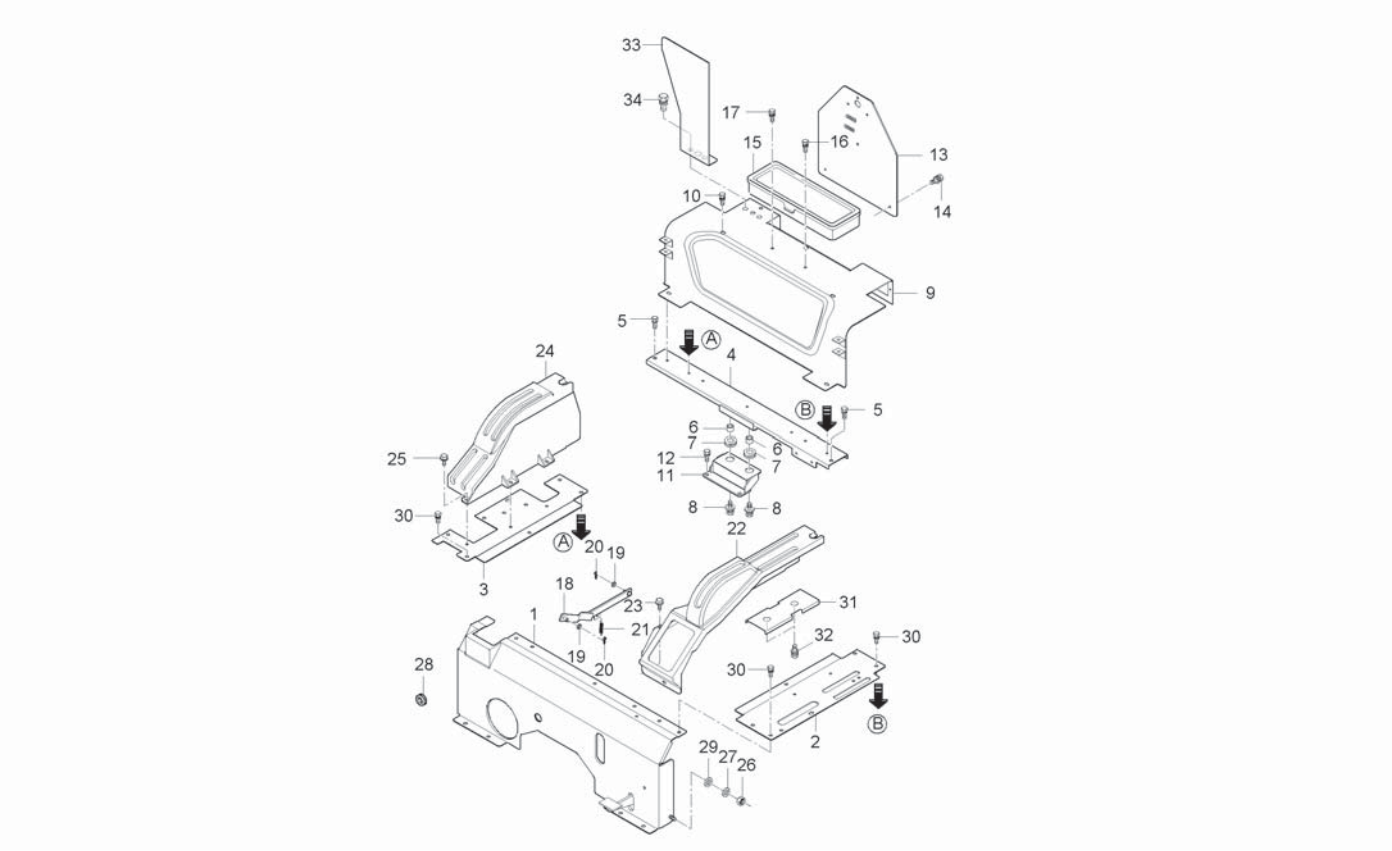

A : CK35-EU , B : CK35H-EU

No.	Part Number	Desciption	Q'TY A	Q'TY B	Q'TY C	Q'TY D	Q'TY E	I.C	Remark
20	05525-50800	PIN, SNAP	2						
21	T2185-66671	SPRING, DIFFERENTIAL LOCK	1						
22	T2185-95425	GUIDE, LEVER LH	1						
23	T4625-55431	FLANGE BOLT	5						
24	T2185-95432	GUIDE, LEVER RH	1						
25	T4625-55431	FLANGE BOLT	4						
26	02156-50080	NUT	2						
27	04512-50080	SPRING WASHER	2						
28	T2198-70471	GROMMET	1						
29	04013-50080	WASHER	2						
30	01125-50816	BOLT, WASHER	9						
31	T2181-95431	SHIFT BRACKET	1						
31	T2181-95432	SHIFT BRACKET	1					<----	
32	01123-50816	BOLT, WASHER	2						
33	T2185-33751	SHIELD	1						
34	01754-50816	BOLT, FLANGE	2						

----> Old replace New
<-X-> Not interchangeable
<-O-> Interchangeable with another part(s)
<---- New replace Old
<---> Interchangeable

CK30HE-T900-1A

STEP GROUP

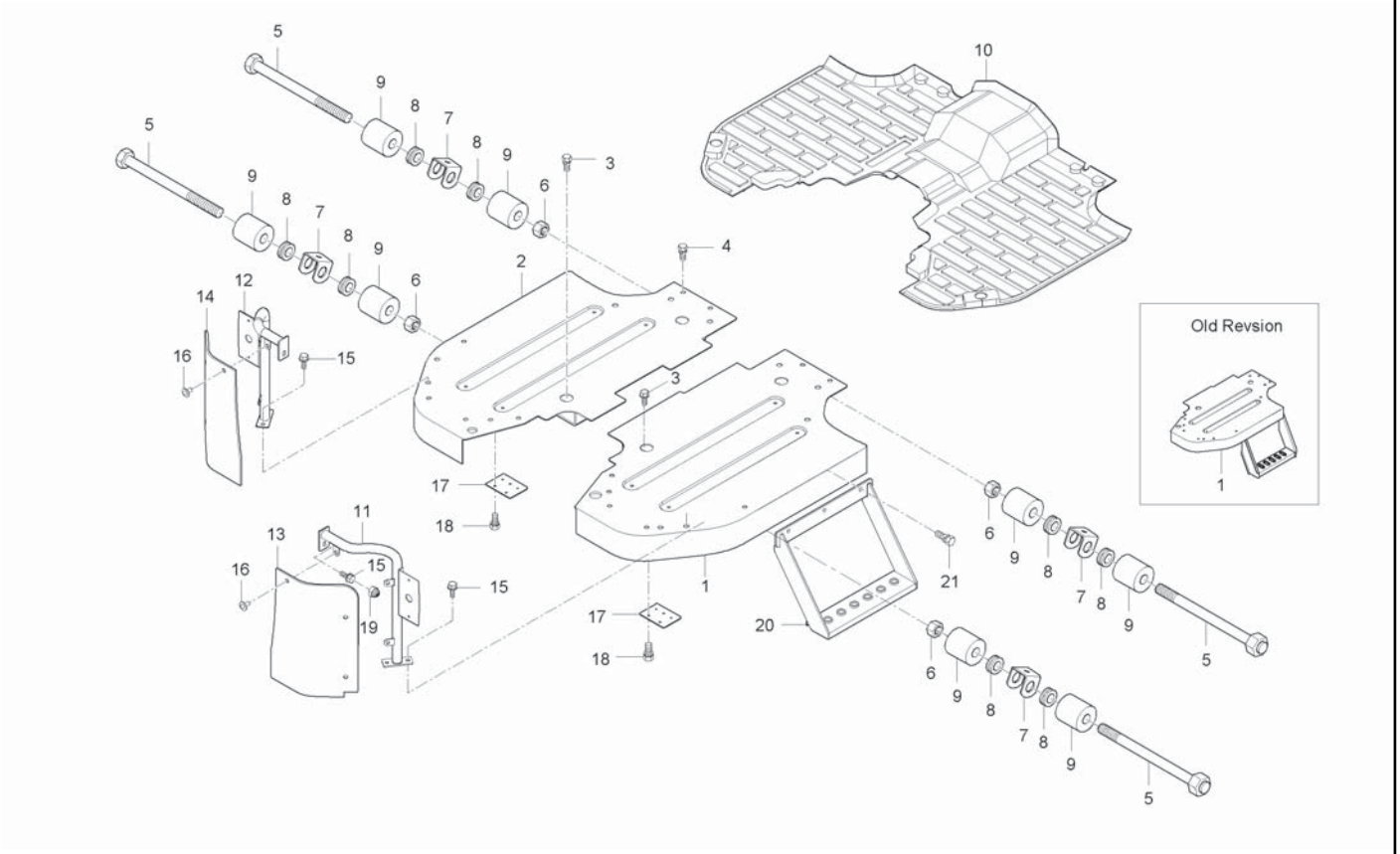

A : CK35-EU , B : CK35H-EU

No.	Part Number	Desciption	Q'TY A	Q'TY B	Q'TY C	Q'TY D	Q'TY E	I.C	Remark
1	T2195-70116	STEP, LH		1					
2	T2195-70126	STEP, RH		1					
3	01123-50818	BOLT, WASHER		4					M8*P1.25
4	01125-50820	BOLT, WASHER		4					M8*P1.25
5	T2350-70152	BOLT, FR		4 ~HT8900076					
5	T4157-70151	BOLT, FR		4 JT8900001~				<-O->	
6	02176-50160	NUT		4					M16*P1.5
7	T2350-70161	BRACKET		4					
8	T2350-70171	GROMMET		8					
9	T2350-70181	CUSHION, STEP		8					
9	T2350-70182	CUSHION, STEP		8				<----	
10	T2195-70232	MAT, STEP		1				<----	
10	T2195-70233	MAT		1				<----	
10	T2195-70234	MAT, STEP		1				<--->	
11	T2181-70311	MUD GUARD COVER ASSY, LH		1					
12	T2185-70322	MUD GUARD COVER ASSY, RH		1					
13	T2185-70331	PLATE, MUD GUARD LH		1					
14	T2185-70341	PLATE, MUD GUARD RH		1					
15	01754-50816	BOLT, FLANGE		6					M8*P1.25

----> Old replace New
<-X-> Not interchangeable
<-O-> Interchangeable with another part(s)
<---- New replace Old
<---> Interchangeable

CK30HE-T900-1A

STEP GROUP

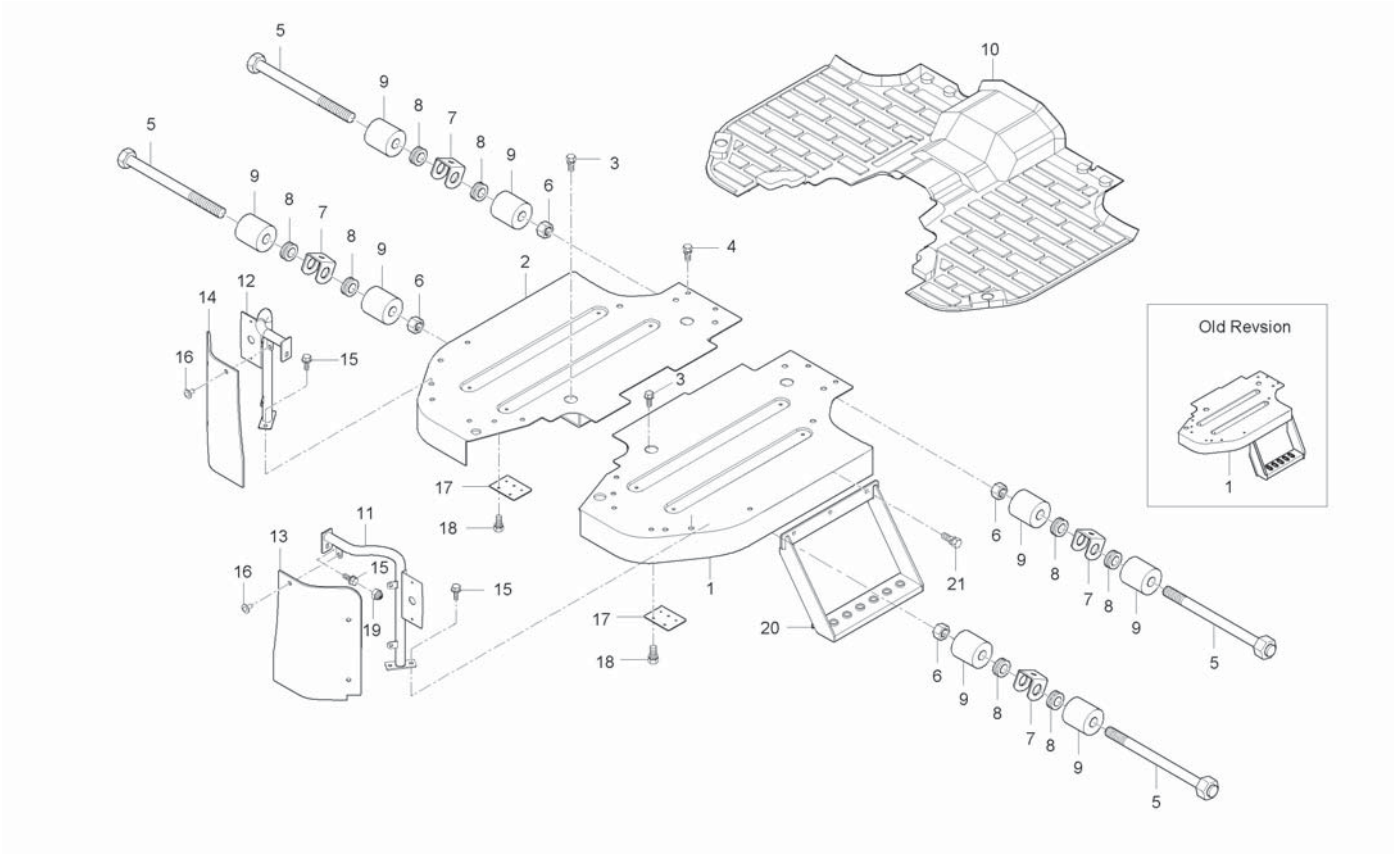

A : CK35-EU , B : CK35H-EU

No.	Part Number	Desciption	Q'TY A	Q'TY B	Q'TY C	Q'TY D	Q'TY E	I.C	Remark
16	53650-6127-1	RIVET		6					
17	T2185-70272	PLATE, WIRE HARNESS		2					
18	01123-50816	BOLT, WASHER		4					M8*P1.25
19	T4815-93211	NUT		2					
20	T2185-70223	STEP, SUPPORT		2					
21	01754-50816	BOLT, FLANGE		8					M8*P1.25

----> Old replace New
<-X-> Not interchangeable
<-O-> Interchangeable with another part(s)
<---- New replace Old
<---> Interchangeable

CK30ME-T900-1A

STEP GROUP

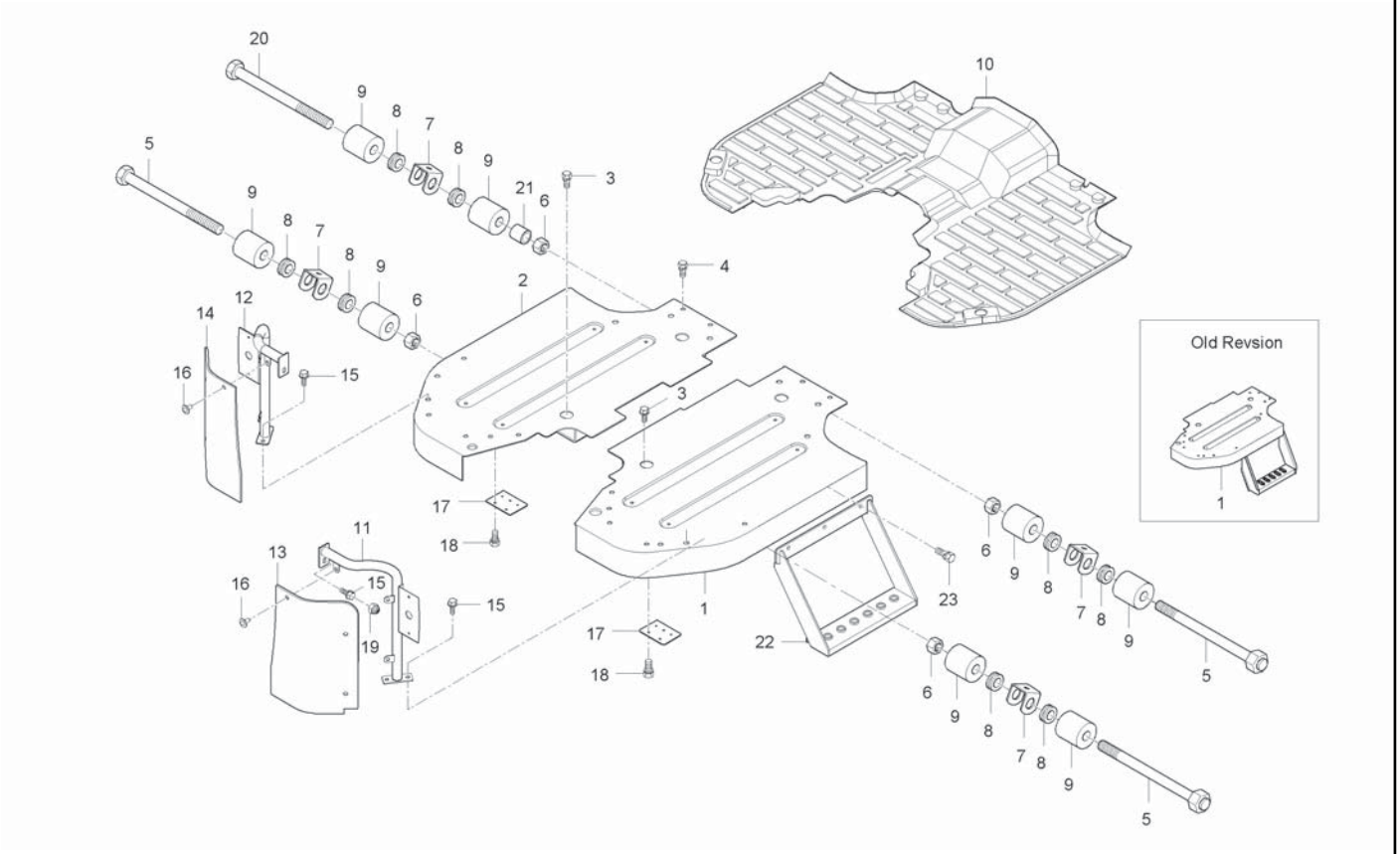

A : CK35-EU , B : CK35H-EU

No.	Part Number	Desciption	Q'TY A	Q'TY B	Q'TY C	Q'TY D	Q'TY E	I.C	Remark
1	T2185-70116	STEP, LH	1 ~GT8100099						
1	T2185-70117	STEP, LH	1 GT8100100~					<-0->	
2	T2185-70126	STEP, RH	1						
3	01123-50818	BOLT, WASHER	4						
4	01125-50820	BOLT, WASHER	4						
5	T2350-70152	BOLT, FR	3						
6	02176-50160	NUT	4						
7	T2350-70161	BRACKET	4						
8	T2350-70171	GROMMET	8						
9	T2350-70181	CUSHION, STEP	8						
9	T2350-70182	CUSHION, STEP	8					<----	
10	T2185-70231	MAT, STEP	1						
10	T2185-70233	MAT, STEP	1					<--->	
11	T2181-70311	MUD GUARD COVER ASSY, LH	1						
12	T2185-70322	MUD GUARD COVER ASSY, RH	1						
13	T2185-70331	PLATE, MUD GUARD LH	1						
14	T2185-70341	PLATE, MUD GUARD RH	1						
15	01754-50816	BOLT, FLANGE	6						
16	53650-6127-1	RIVET	6						

----> Old replace New
<-X-> Not interchangeable
<-O-> Interchangeable with another part(s)
<---- New replace Old
<---> Interchangeable

CK30ME-T900-1A

STEP GROUP

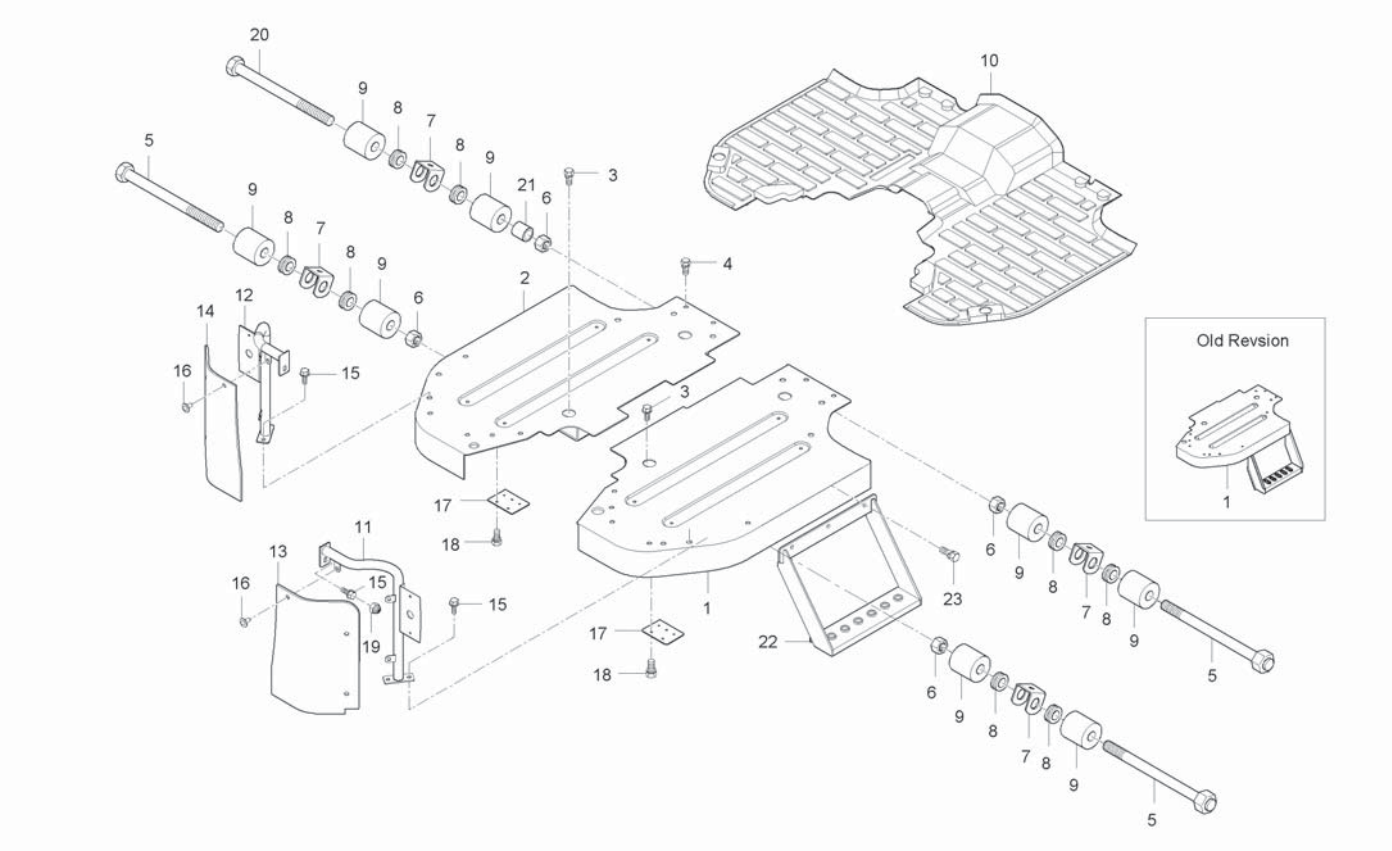

A : CK35-EU , B : CK35H-EU

No.	Part Number	Desciption	Q'TY A	B	C	D	E	I.C	Remark
17	T2185-70272	PLATE, WIRE HARNESS	2						
18	01123-50816	BOLT, WASHER	4						
19	T4815-93211	NUT	2						
20	T2185-70191	BOLT, RR	1						
21	56713-6716-4	SPACER, 20	1						
22	T2185-70223	STEP, SUPPORT	2						
23	01754-50816	BOLT, FLANGE	8						

----> Old replace New
<-X-> Not interchangeable
<-O-> Interchangeable with another part(s)
<---- New replace Old
<---> Interchangeable

CK30ME-T910B

SEAT GROUP

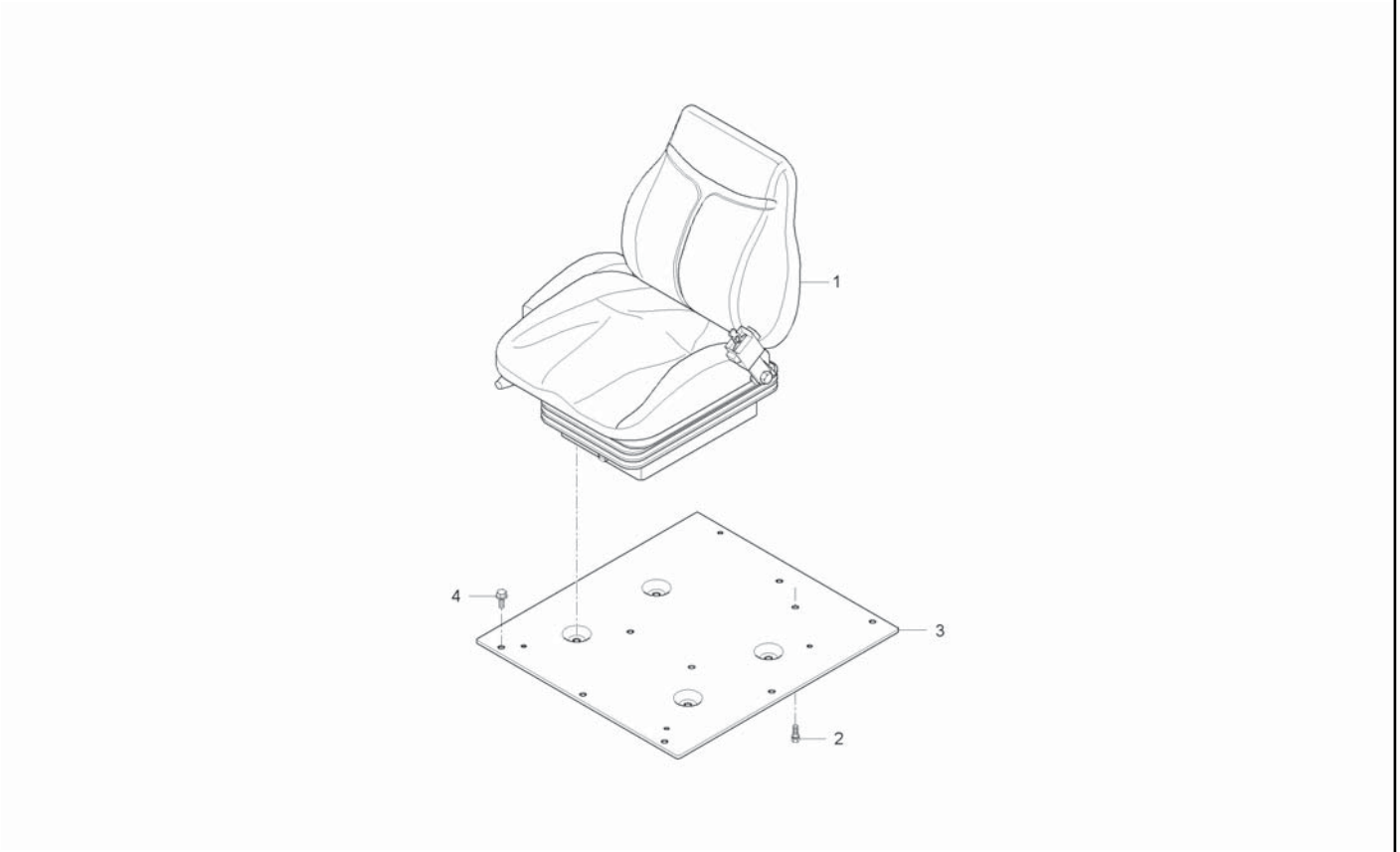

A : CK35-EU , B : CK35H-EU

No.	Part Number	Desciption	Q'TY A	Q'TY B	Q'TY C	Q'TY D	Q'TY E	I.C	Remark
1	T2181-19501	SEAT ASSY	1	1					
2	01123-50820	BOLT, WASHER	4 ~HT8100038	4 ~HT8900076					M8*P1.25
2	01754-50816	BOLT, FLANGE	4 HT8100039~	4 JT8900001~				<-O->	M8*P1.25
3	T2185-70433	FLOOR, SEAT	1	1					
4	01125-50816	BOLT, WASHER	7	7					M8*P1.25

----> Old replace New
<-X-> Not interchangeable
<-O-> Interchangeable with another part(s)
<---- New replace Old
<---> Interchangeable

CK2810HEU-T915A

LABEL GROUP

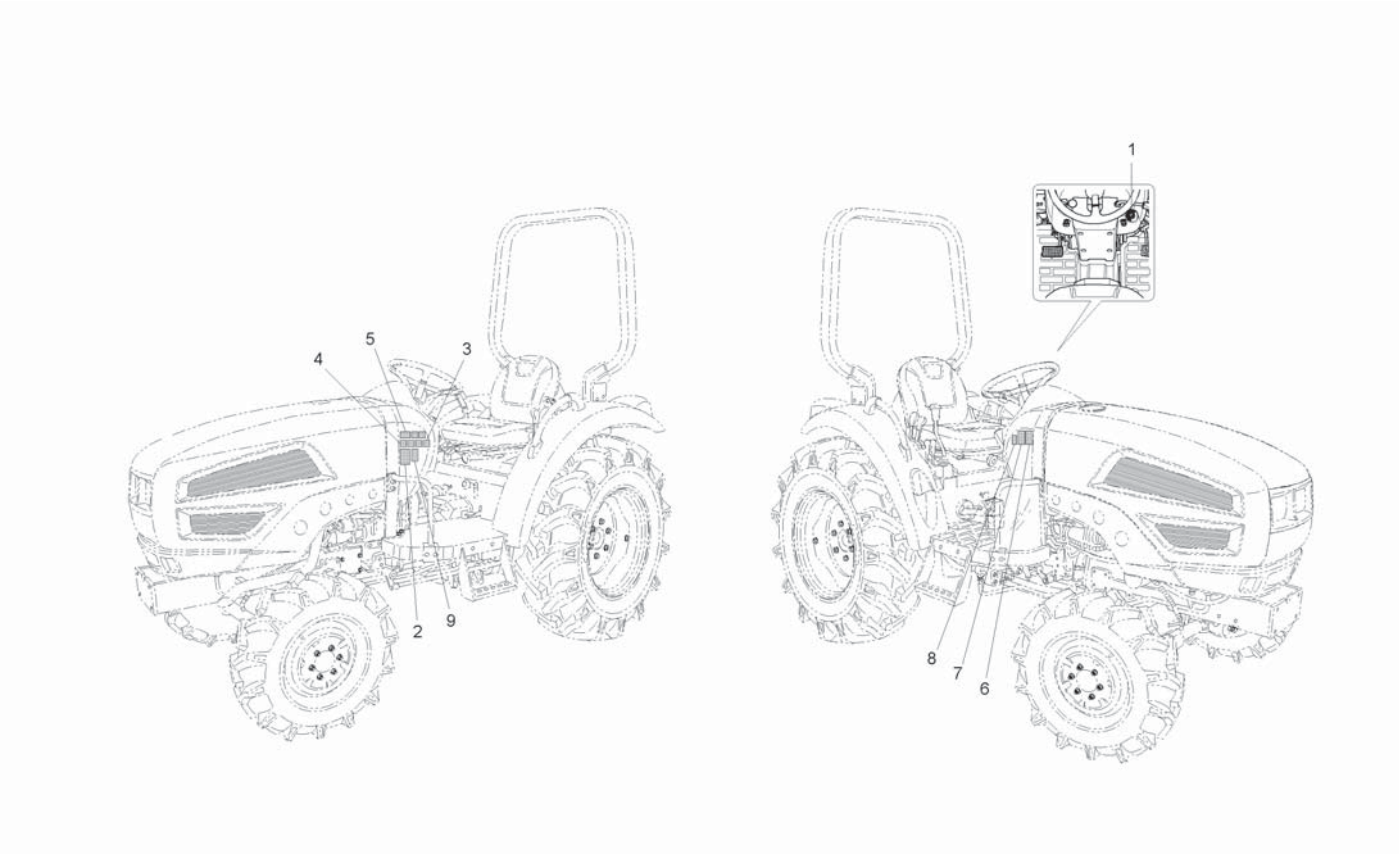

A : CK35-EU , B : CK35H-EU

No.	Part Number	Desciption	Q'TY A	Q'TY B	Q'TY C	Q'TY D	Q'TY E	I.C	Remark
1	T5248-52101	LABEL	1	1					
2	T4125-56111	LABEL, FOPS WARNING	1	1					
3	T4125-56141	LABEL, NOISE WARNING	1	1					
4	T4125-56151	LABEL, PERSERVATION	1	1					
5	T4125-56161	LABEL, FACE WARNING	1	1					
6	T4125-56171	LABEL 1, REPAIR WARNING	1	1					
7	T4125-56181	LABEL 2, REPAIR WARNING	1	1					
8	T4025-58731		1	1					
9	T4025-58591	LABEL, LEVER WARNING	1	1					

----> Old replace New
<-X-> Not interchangeable
<-O-> Interchangeable with another part(s)
<---- New replace Old
<---> Interchangeable

CK35ME-T915B

SEAT GROUP

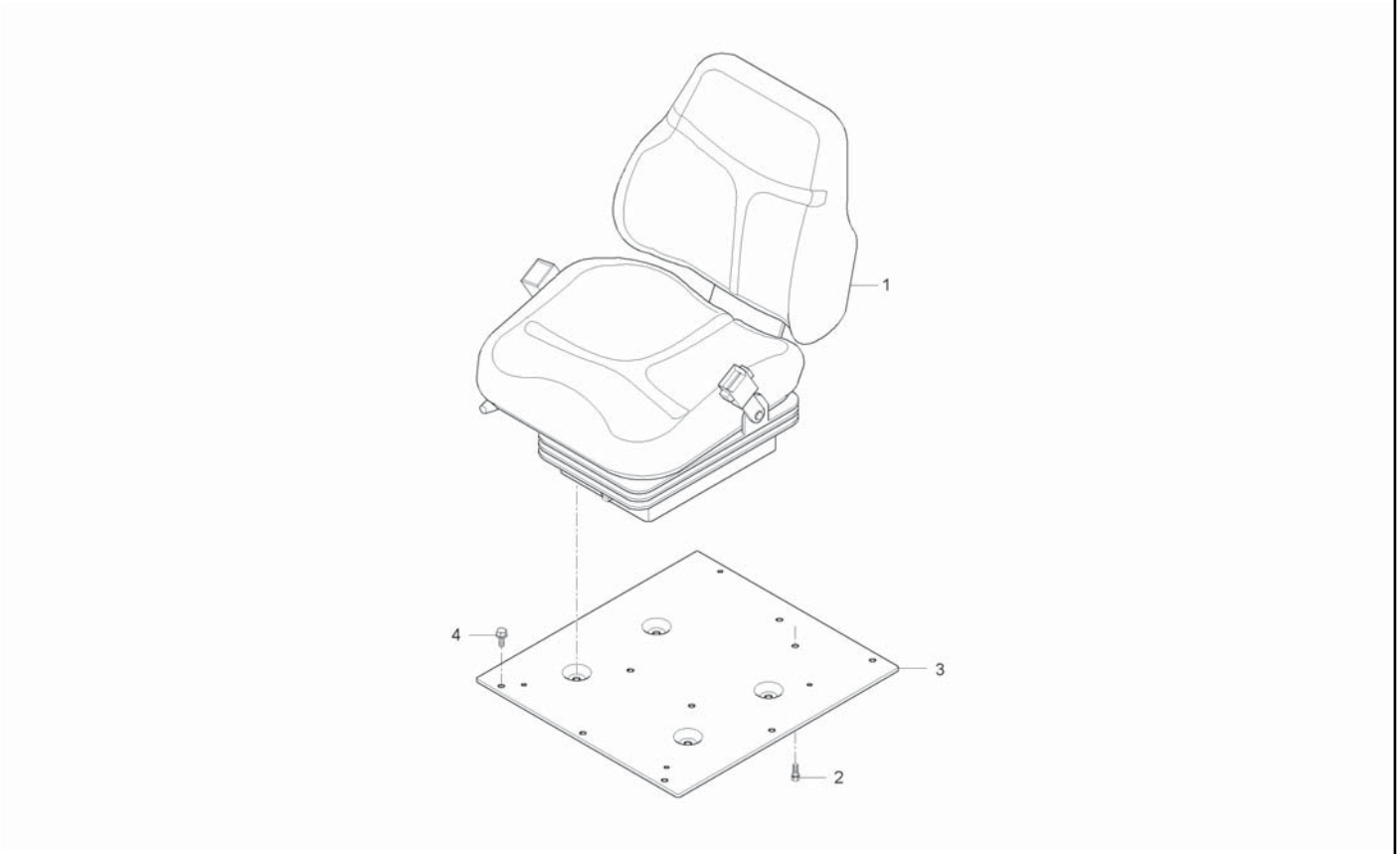

A : CK35-EU , B : CK35H-EU

No.	Part Number	Desciption	Q'TY A	Q'TY B	Q'TY C	Q'TY D	Q'TY E	I.C	Remark
1	T2181-17551	ASS'Y, SEAT	1	1					
2	01754-50816	BOLT, FLANGE	4	4					M8*P1.25
3	T2185-70433	FLOOR, SEAT	1	1					
4	01754-50816	BOLT, FLANGE	7	7					M8*P1.25

----> Old replace New
<-X-> Not interchangeable
<-O-> Interchangeable with another part(s)
<---- New replace Old
<---> Interchangeable

CK35HE-T970-1A

LABEL GROUP

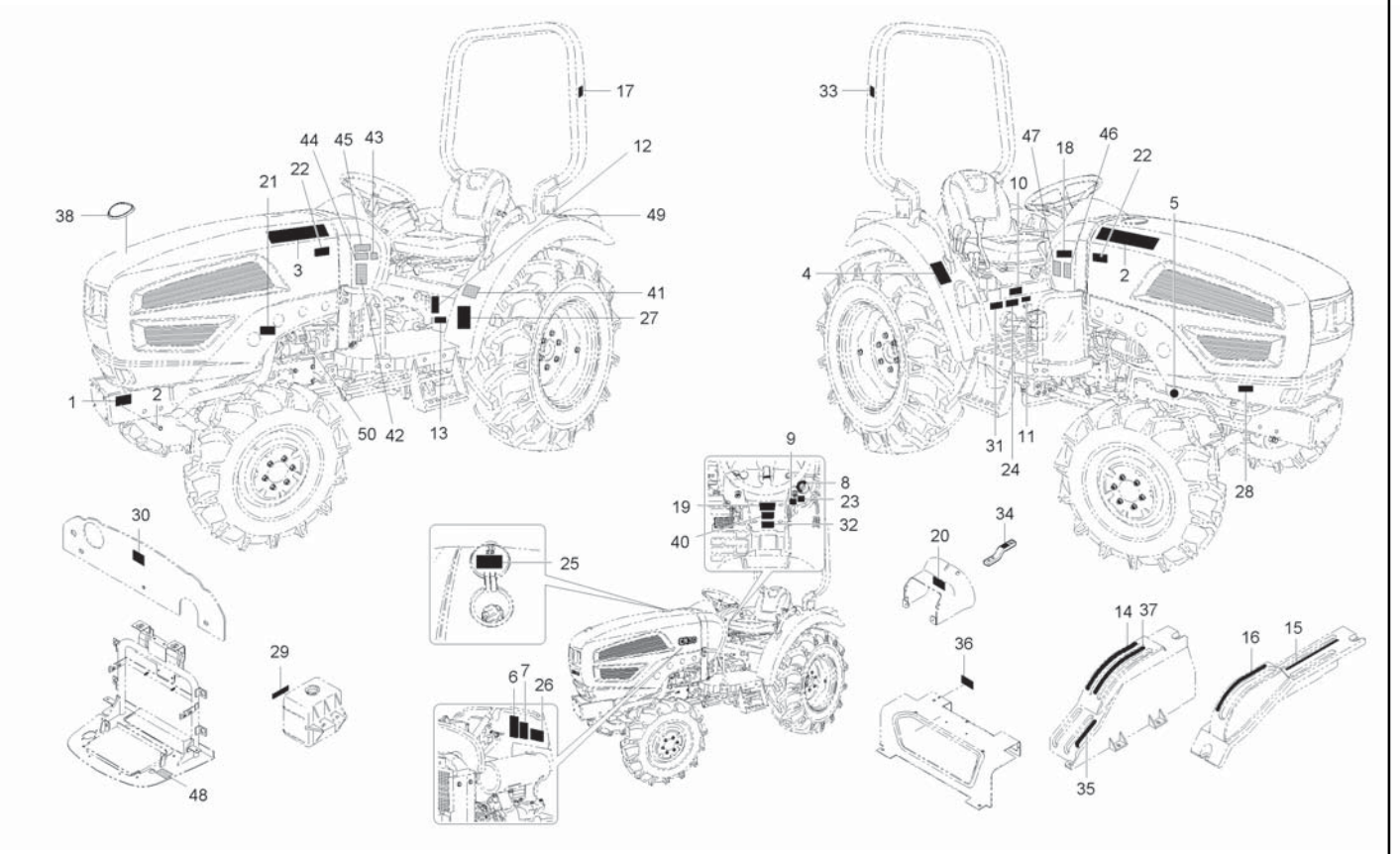

A : CK35-EU , B : CK35H-EU

No.	Part Number	Desciption	Q'TY A	Q'TY B	Q'TY C	Q'TY D	Q'TY E	I.C	Remark
1	T2181-52024	LABEL, PRODUCT		1					
1	T2181-52026	NAME PLATE		1				<----	
1	T2181-52027	NAME PLATE		1				---->	
1	T2181-52028	NAME PLATE		1				<----	
1	T2181-52029	NAME PLATE		1				<----	
2	05624-20408	RIVET		4					
3	T2155-53011	LABEL, MODEL		2					
4	T2350-52171	LABEL, CARTRIDGE ENGINE		1					
5	94612-1833-1	LABEL, OIL FILTER		1					
6	T4625-52351	LABEL, FAN WARNING		1					
6	T4025-58741			1				<----	
7	T4625-52361	LABEL, MUFFLER		1					
7	T4025-58561	LABEL, HOT SURFACE WARNING		1				<----	
8	T2351-52101	LABEL, STARTER SWITCH		1					
8	T2351-52102	LABEL, STARTER SWITCH		1				<--->	
8	T5248-52101	LABEL		1				<-X->	
9	T2350-53121	DECAL PARK BRAKE		1					
10	T2350-53141	LABEL, CARTRIDGE MISSION		1					
11	T2610-52461	LABEL, SPEED CONTROL		1					

----> Old replace New
<-X-> Not interchangeable
<-O-> Interchangeable with another part(s)
<---- New replace Old
<---> Interchangeable

CK35HE-T970-1A

LABEL GROUP

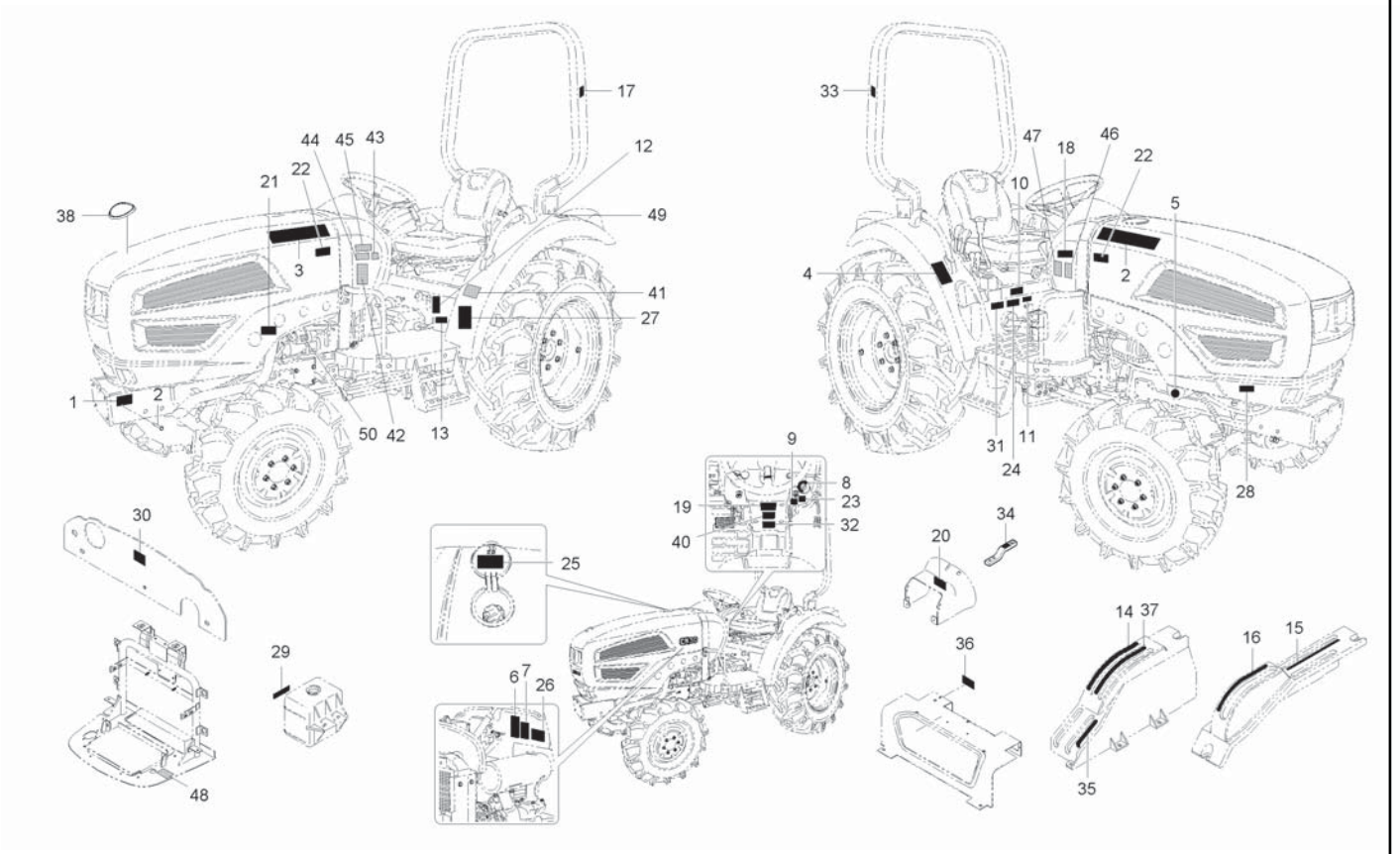

A : CK35-EU , B : CK35H-EU

No.	Part Number	Desciption	Q'TY A	Q'TY B	Q'TY C	Q'TY D	Q'TY E	I.C	Remark
12	94612-4817-1	LABEL, FWD		1					
12	T2241-50311	NAME,PLATE		1				<--->	
13	T2611-26692	LABEL, DIFFERENTIAL FIXING		1					
13	T2611-26693	LABEL, DIFFERENTIAL FIXING		1				<--->	
14	T2185-53162	LABEL,POSITION CONTROL		1					
15	T2185-53184	LABEL, PTO		1					
16	T2195-54112	LABEL, HI-LOW SPEED LEVER		1					
17	T2445-50724	LABEL, ROPS WARNING		1					
17	T4025-58571	LABEL (ROPS)		1				<----	
18	T2325-50192	LABEL, FUEL FILTER		1					
19	T2325-50512	LABEL, SAFETY DRIVE		1					
19	T4025-58551	LABEL		1				<----	
20	T2325-50743	LABEL, PTO WARNING		1					
20	T4025-58751	LABEL,P.T.O.INSTRUCTION		1				<----	
21	94612-9459-1	LABEL		1					
22	T2195-52151	LABEL, HST		2					
23	T2360-53151	LABEL, CARTRIDGE		1					
24	T2360-53151	LABEL, CARTRIDGE		1					
25	T2615-54112	LABEL, CAUTION		1					

----> Old replace New
<-X-> Not interchangeable
<-O-> Interchangeable with another part(s)
<---- New replace Old
<---> Interchangeable

CK35HE-T970-1A

LABEL GROUP

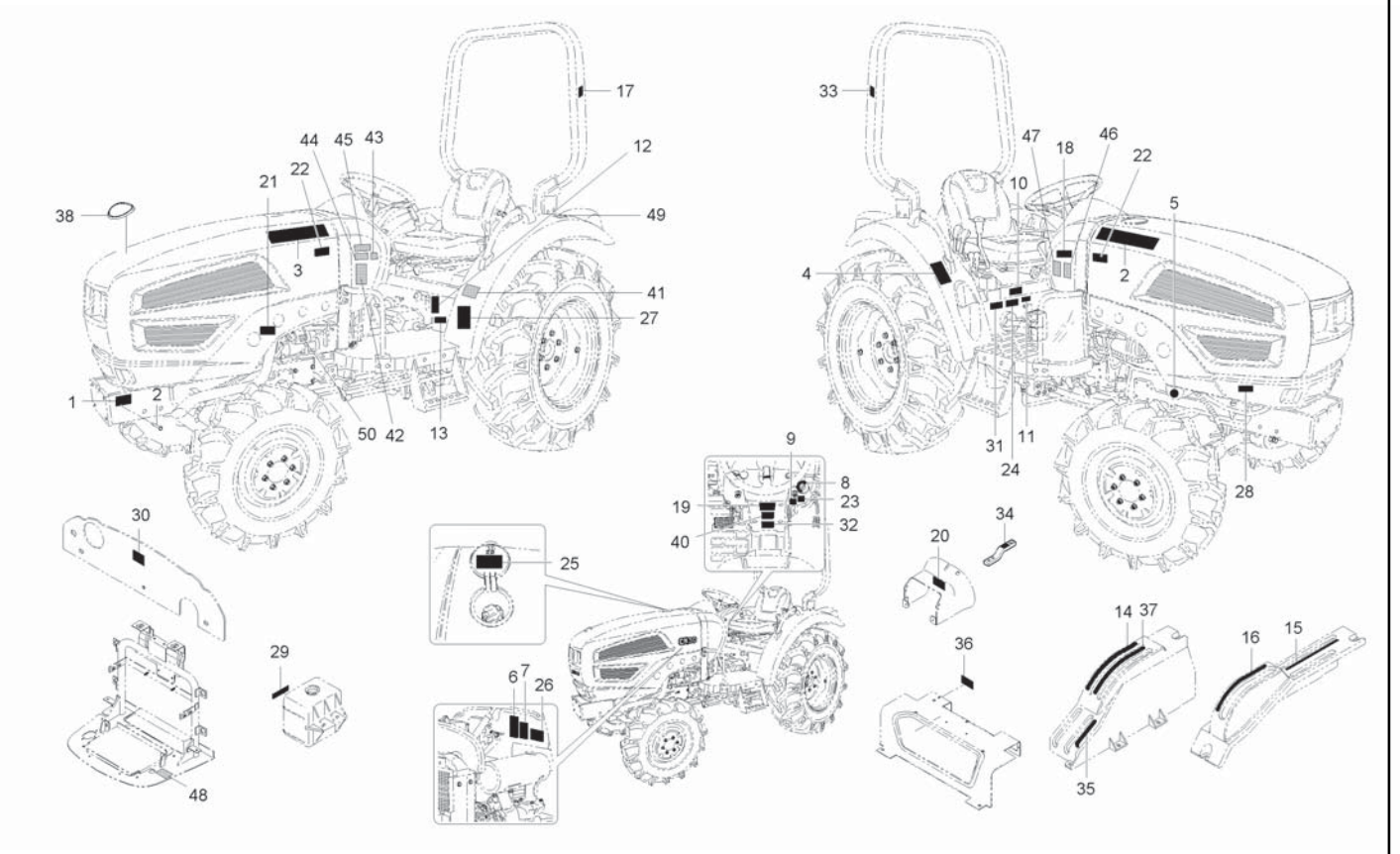

A : CK35-EU , B : CK35H-EU

No.	Part Number	Desciption	Q'TY A	Q'TY B	Q'TY C	Q'TY D	Q'TY E	I.C	Remark
25	U3230-85611	LABEL, FUEL WARNING		1				<----	
26	T2615-55112	LABEL, MUFFLER CAUTION		1					
27	T2195-54151	LABEL		1					
28	T4689-52181	LABEL, BONNET OPEN		1					
29	T2541-88212	LABEL,COOLING WATER		1					
30	T2615-53561	LABEL, RADIATOR		1					
30	T4025-58541	LABEL, RADIATOR CAUTION		1				<----	
31	T2350-54141	LABEL, JOYSTICK WARNING		1					
31	T4025-58591	LABEL, LEVER WARNING		1				<----	
32	T2350-54131	LABEL, JOYSTICK		1					
33	T2181-52451	LABEL,ROPS CERTIFICATIN		1					
33	T2181-52452	LABEL,ROPS CERTIFICATIN		1				<-X->	
34	T2611-52461	LABEL, DRAWBAR		1					
35	T2185-53173	LABEL, DOUBLE ACTING LEVER		1					
35	T2185-53174	LABEL,DOLBLE ACTING		1				<--->	
36	T2181-54121	LABEL, COUPLER SOCKET		1					
37	T2185-53153	LABEL, DRAWER CONTROL		1					
38	T2185-51462	EMBLEM		1					
40	T4025-58581	LABEL, SEAT BELT WARNING		1					

----> Old replace New
<-X-> Not interchangeable
<-O-> Interchangeable with another part(s)
<---- New replace Old
<---> Interchangeable

CK35HE-T970-1A

LABEL GROUP

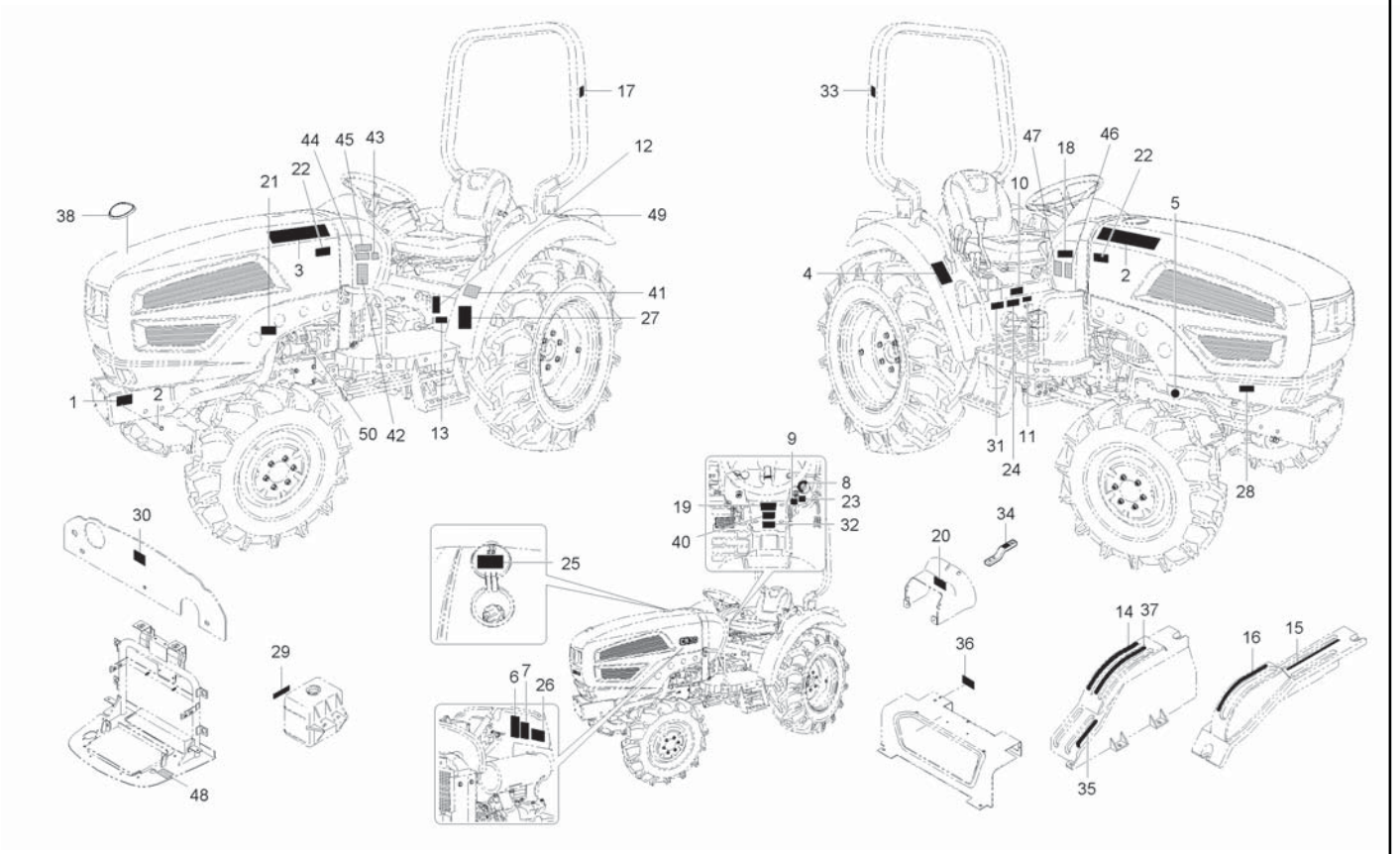

A : CK35-EU , B : CK35H-EU

No.	Part Number	Desciption	Q'TY A	Q'TY B	Q'TY C	Q'TY D	Q'TY E	I.C	Remark
41	T4025-58731			1					
42	T4125-56111	LABEL, FOPS WARNING		1					
43	T4125-56141	LABEL, NOISE WARNING		1					
44	T4125-56151	LABEL, PERSERVATION		1					
45	T4125-56161	LABEL, FACE WARNING		1					
46	T4125-56171	LABEL 1, REPAIR WARNING		1					
47	T4125-56181	LABEL 2, REPAIR WARNING		1					
48	T4025-58531	LABEL, ELEC. SHOCK WARNING		1					
49	T4025-58711	LABEL, FENDER WARNING		1					
50	T4025-58721	LABEL, START MOTOR WARNING		1					

----> Old replace New
<-X-> Not interchangeable
<-O-> Interchangeable with another part(s)
<---- New replace Old
<---> Interchangeable

CK35ME-T970-1A

LABEL GROUP

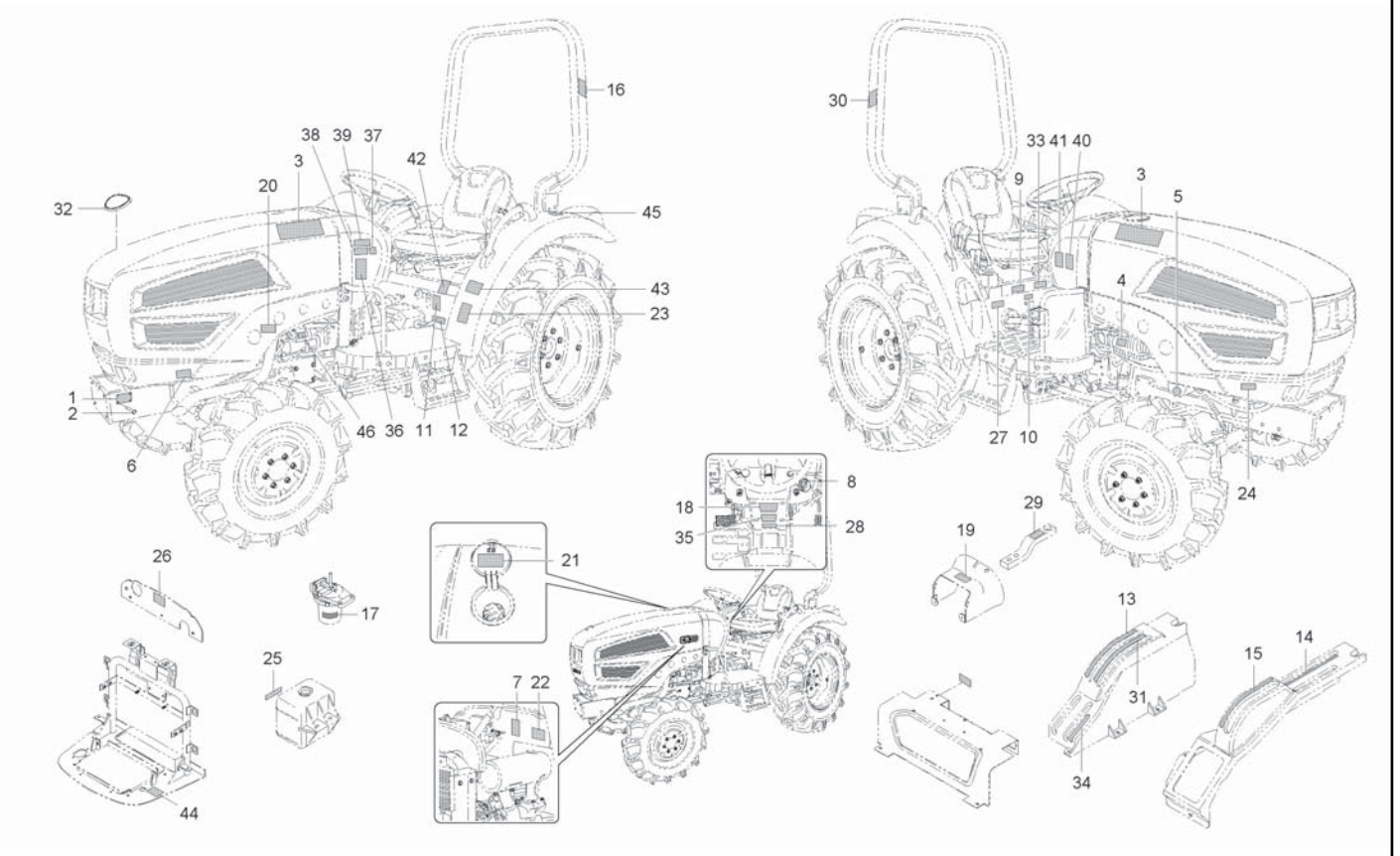

A : CK35-EU , B : CK35H-EU

No.	Part Number	Desciption	Q'TY A	B	C	D	E	I.C	Remark
1	T2181-52024	LABEL, PRODUCT	1						
1	T2181-52026	NAME PLATE	1					<----	
1	T2181-52027	NAME PLATE	1					<----	
1	T2181-52028	NAME PLATE	1					<----	
1	T2181-52029	NAME PLATE	1					<----	
2	05624-20408	RIVET	4						
3	T2155-53011	LABEL, MODEL	2						
4	T2350-52171	LABEL, CARTRIDGE ENGINE	1						
5	94612-1833-1	LABEL, OIL FILTER	1						
6	T4625-52351	LABEL, FAN WARNING	1						
6	T4025-58741		1					<----	
7	T4625-52361	LABEL, MUFFLER	1						
7	T4025-58561	LABEL, HOT SURFACE WARNING	1					<----	
8	T2351-52101	LABEL, STARTER SWITCH	1						
8	T2351-52102	LABEL, STARTER SWITCH	1					<--->	
8	T5248-52101	LABEL	1					<-X->	
9	T2350-53141	LABEL, CARTRIDGE MISSION	1						
9	T4025-58591	LABEL, LEVER WARNING	1					<----	
10	T2610-52461	LABEL, SPEED CONTROL	1						

----> Old replace New
<-X-> Not interchangeable
<-O-> Interchangeable with another part(s)
<---- New replace Old
<---> Interchangeable

CK35ME-T970-1A

LABEL GROUP

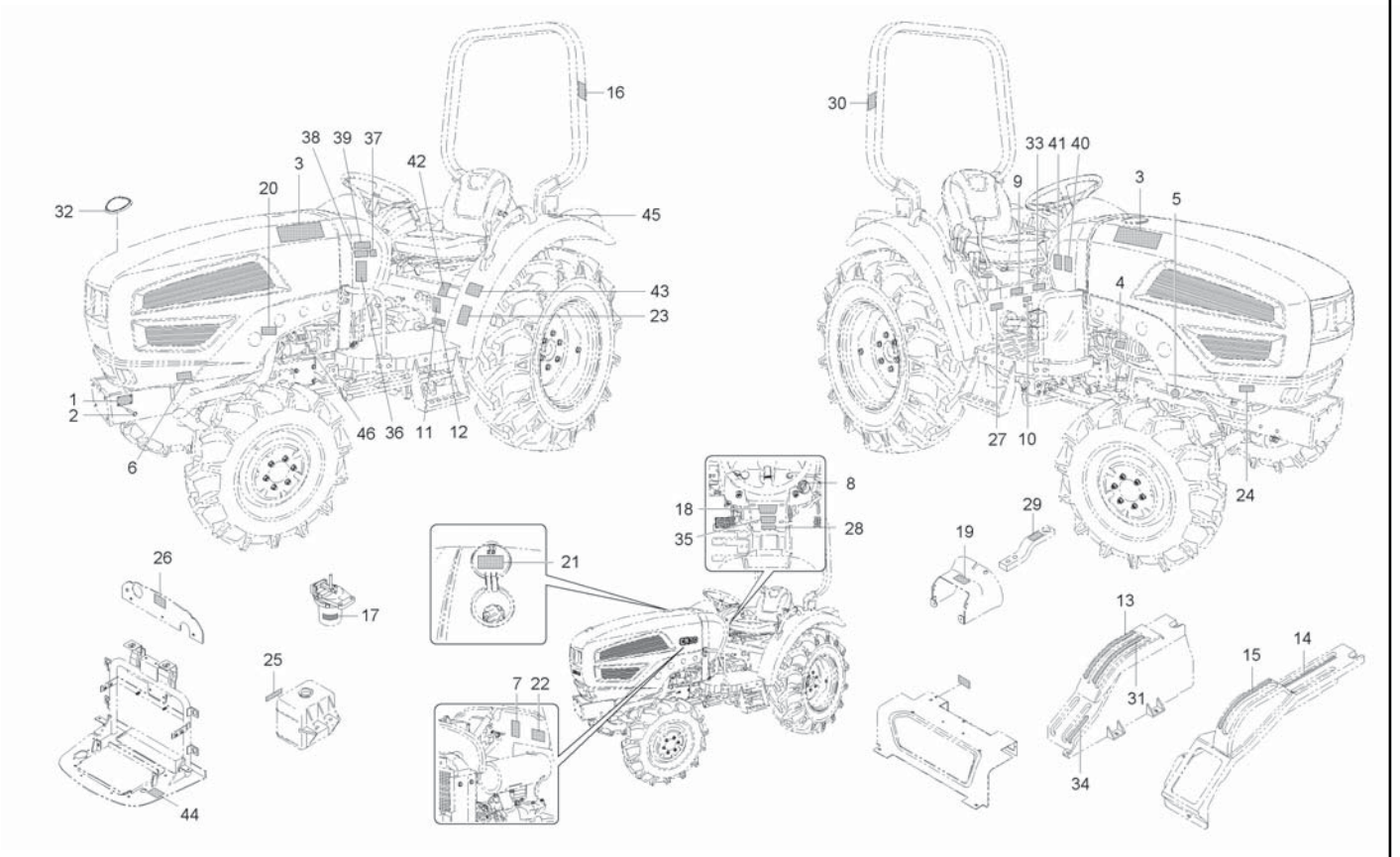

A : CK35-EU , B : CK35H-EU

No.	Part Number	Desciption	Q'TY A	B	C	D	E	I.C	Remark
11	94612-4817-1	LABEL, FWD	1						
11	T2241-50311	NAME,PLATE	1					<--->	
12	T2611-26692	LABEL, DIFFERENTIAL FIXING	1						
12	T2611-26693	LABEL, DIFFERENTIAL FIXING	1					<--->	
13	T2185-53162	LABEL,POSITION CONTROL	1						
14	T2185-53184	LABEL, PTO	1						
15	T2185-54113	LABEL, HI-LOW SPEED LEVER	1						
16	T2445-50724	LABEL, ROPS WARNING	1						
16	T4025-58571	LABEL (ROPS)	1					<----	
17	T2325-50192	LABEL, FUEL FILTER	1						
18	T2325-50512	LABEL, SAFETY DRIVE	1						
18	T4025-58551	LABEL	1					<----	
19	T2325-50743	LABEL, PTO WARNING	1						
19	T4025-58751	LABEL,P.T.O.INSTRUCTION	1					<----	
20	94612-9459-1	LABEL	1						
21	T2615-54112	LABEL, CAUTION	1						
21	U3230-85611	LABEL, FUEL WARNING	1					<----	
22	T2615-55112	LABEL, MUFFLER CAUTION	1						
23	T2185-54151	LABEL	1						

----> Old replace New
<-X-> Not interchangeable
<-O-> Interchangeable with another part(s)
<---- New replace Old
<---> Interchangeable

CK35ME-T970-1A

LABEL GROUP

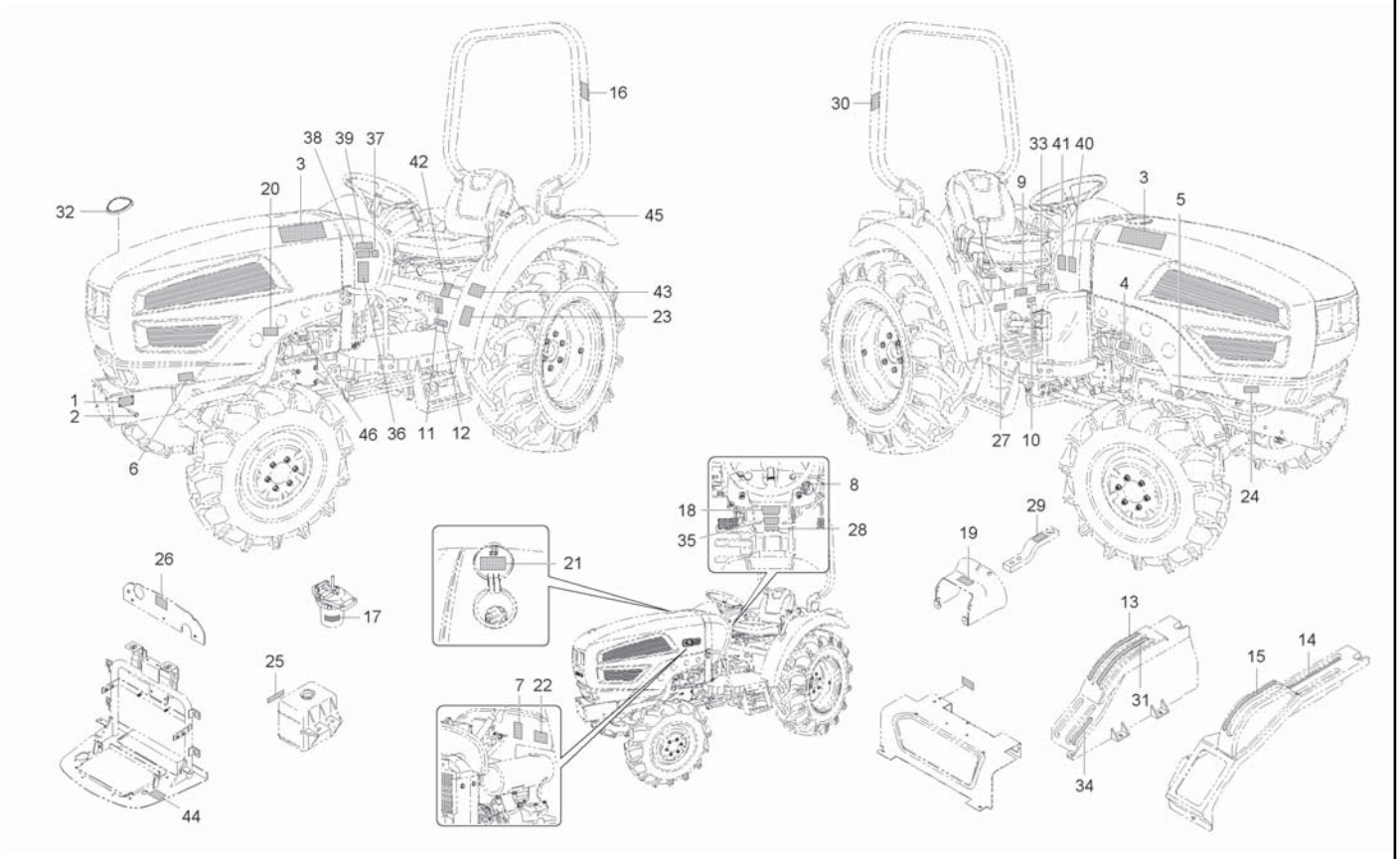

A : CK35-EU , B : CK35H-EU

No.	Part Number	Desciption	Q'TY A	B	C	D	E	I.C	Remark
24	T4689-52181	LABEL, BONNET OPEN	1						
25	T2541-88212	LABEL,COOLING WATER	1						
26	T2615-53561	LABEL, RADIATOR	1						
26	T4025-58541	LABEL, RADIATOR CAUTION	1					<----	
27	T2350-54141	LABEL, JOYSTICK WARNING	1						
28	T2350-54131	LABEL, JOYSTICK	1						
29	T2611-52461	LABEL, DRAWBAR	1						
30	T2181-52451	LABEL,ROPS CERTIFICATIN	1						
30	T2181-52452	LABEL,ROPS CERTIFICATIN	1					<-X->	
31	T2185-53153	LABEL, DRAWER CONTROL	1						
32	T2185-51462	EMBLEM	1						
33	T2611-52351	LABEL, PARKING BREAK	1						
34	T2185-53173	LABEL, DOUBLE ACTING LEVER	1						
34	T2185-53174	LABEL,DOLBLE ACTING	1					<--->	
35	T4025-58581	LABEL, SEAT BELT WARNING	1						
36	T4125-56111	LABEL, FOPS WARNING	1						
37	T4125-56141	LABEL, NOISE WARNING	1						
38	T4125-56151	LABEL, PERSERVATION	1						
39	T4125-56161	LABEL, FACE WARNING	1						

----> Old replace New
<-X-> Not interchangeable
<-O-> Interchangeable with another part(s)
<---- New replace Old
<---> Interchangeable

CK35ME-T970-1A

LABEL GROUP

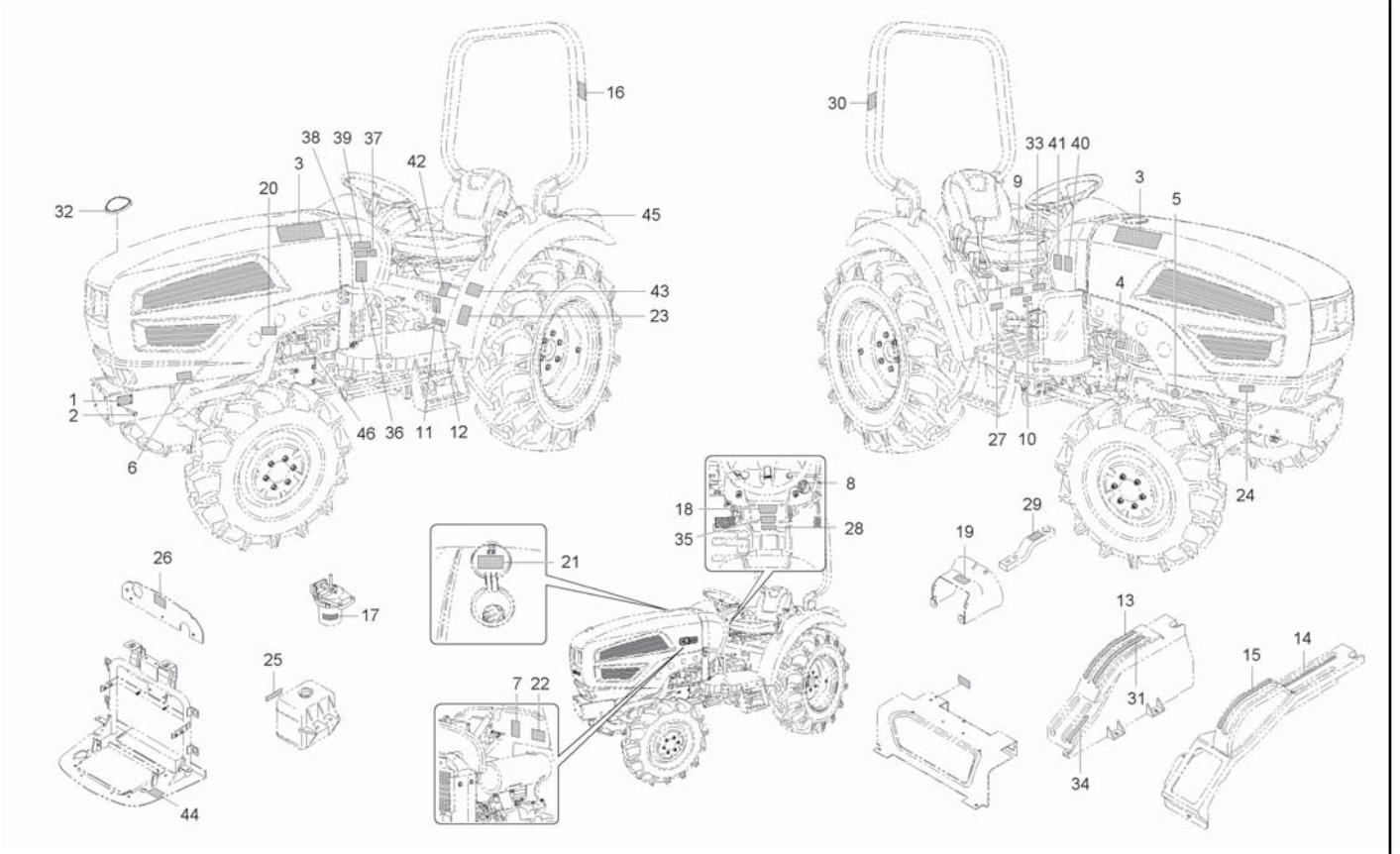

A : CK35-EU , B : CK35H-EU

No.	Part Number	Desciption	Q'TY A	B	C	D	E	I.C	Remark
40	T4125-56171	LABEL 1, REPAIR WARNING	1						
41	T4125-56181	LABEL 2, REPAIR WARNING	1						
42	T4025-57521	DECAL PARK BRAKE	1						
43	T4025-58731		1						
44	T4025-58531	LABEL, ELEC. SHOCK WARNING	1						
45	T4025-58711	LABEL, FENDER WARNING	1						
46	T4025-58721	LABEL, START MOTOR WARNING	1						

----> Old replace New
<-X-> Not interchangeable
<-O-> Interchangeable with another part(s)
<---- New replace Old
<---> Interchangeable

CK35ME-T980A

ROPS GROUP

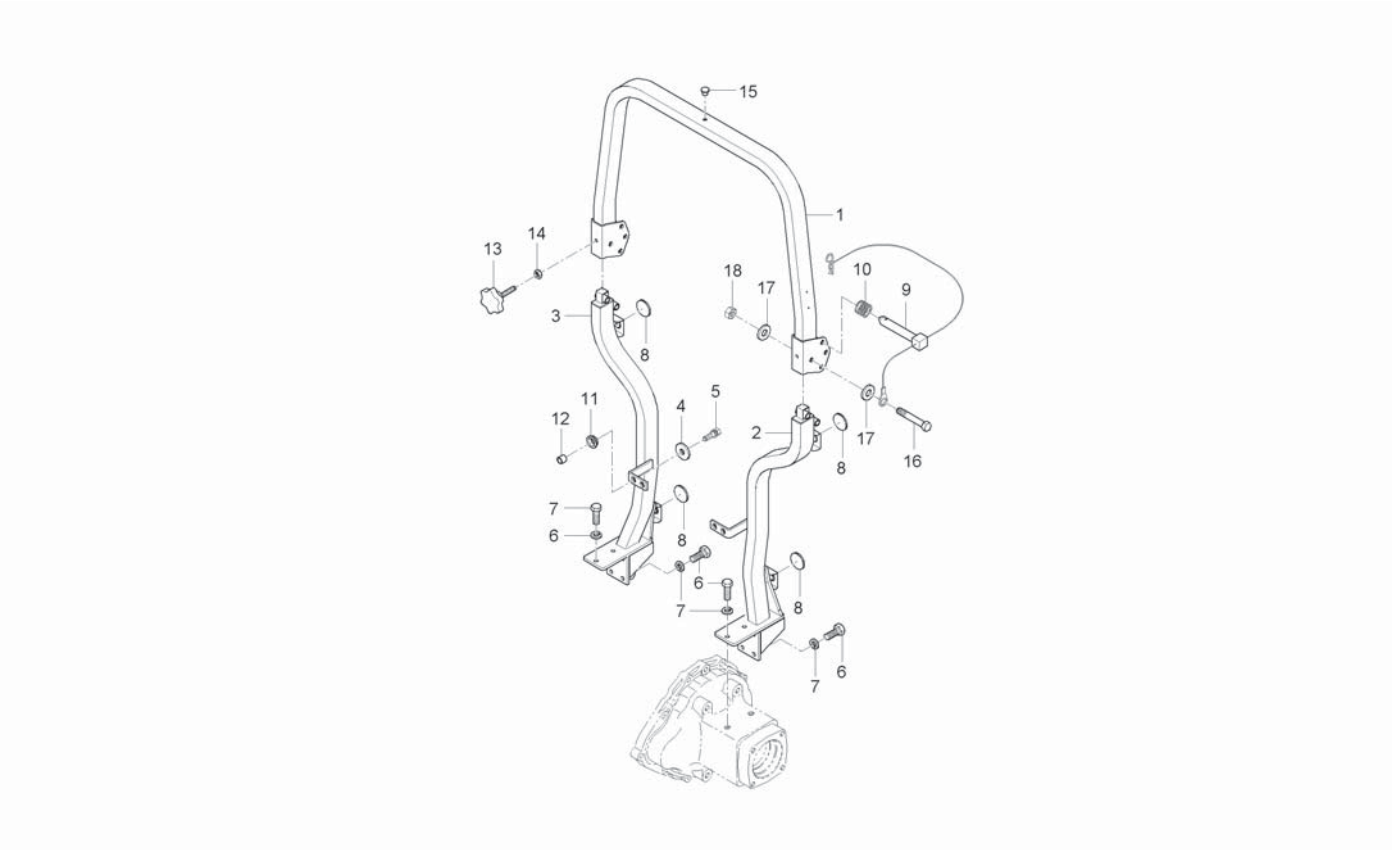

A : CK35-EU , B : CK35H-EU

No.	Part Number	Desciption	Q'TY A	Q'TY B	Q'TY C	Q'TY D	Q'TY E	I.C	Remark
1	T2181-97112	ROPS ASSY	1	1					
2	T2181-97121	SUPPORT, ROPS LH	1	1					
3	T2181-97131	SUPPORT, ROPS RH	1	1					
4	04015-50100	WASHER, PLAIN	4	4					
5	01133-51040	BOLT, WASHER	4	4					M10XP1.25X40
6	04512-50140	WASHER, SPRING	12	12					
7	T2230-85242	BOLT	12	12					
8	T2611-85721	PLATE, REFLEX	2	2					
8	T4144-85721	ASS'Y REFLECTOR	2	2				<-0->	
9	T2145-97151	PIN, FIXING ROPS	2	2					
10	T2185-97161	SPRING	2	2					
11	T4620-60151	GROMMET	4	4					
12	T2185-97171	COLLAR	4	4					
13	T2185-97182	BOLT, KNOB	2	2					
14	02074-50120	NUT	2	2					M12*P1.25
15	T4625-29291	PLUG	1	1					
16	01173-51690	BOLT	2	2					
17	04011-50160	WASHER	4	4					M16
18	T2181-97191	NUT, REMOVE CHECK	2	2					

----> Old replace New
<-X-> Not interchangeable
<-O-> Interchangeable with another part(s)
<---- New replace Old
<---> Interchangeable

CK30ME-T990A

TOWING HOOK GROUP

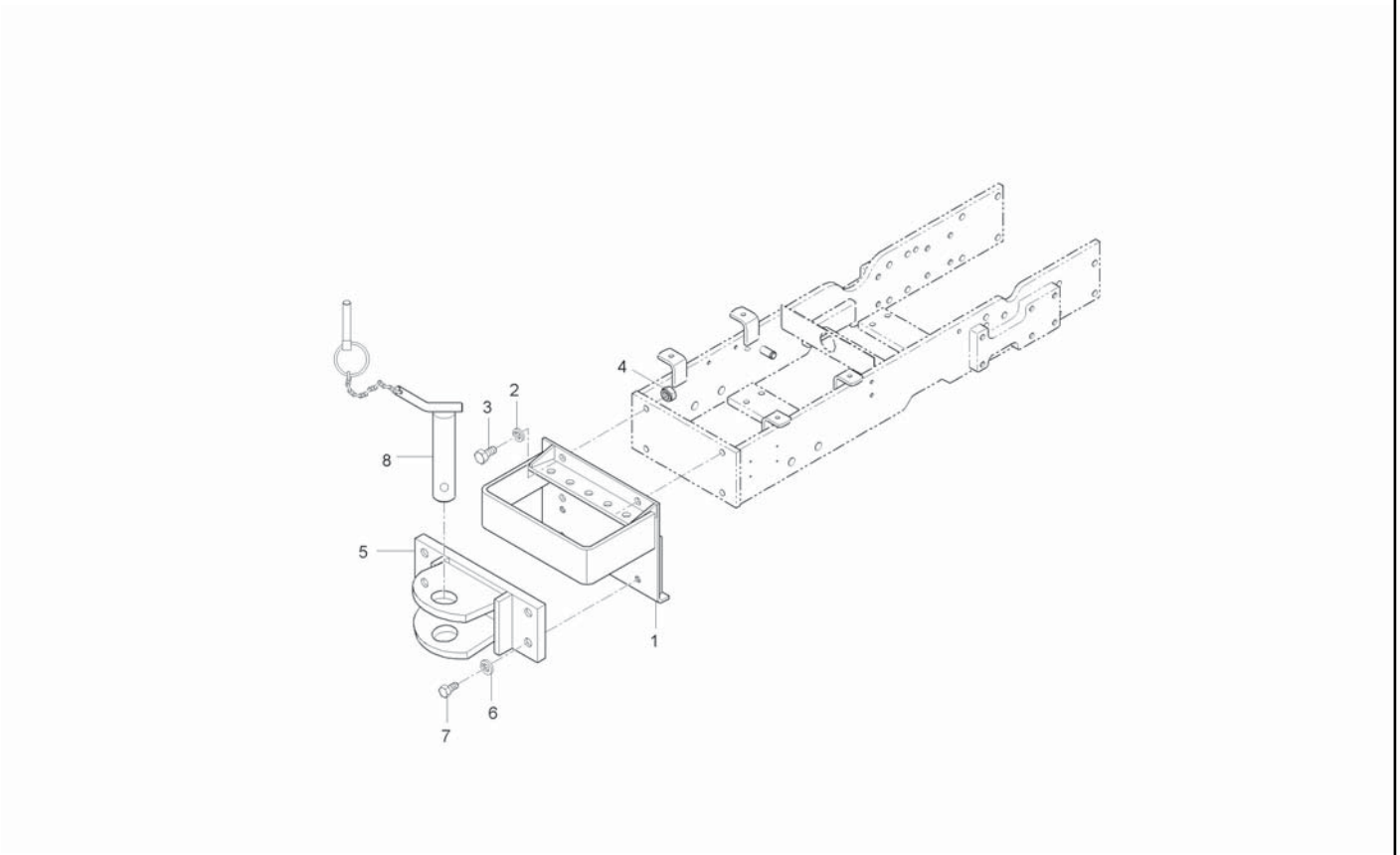

A : CK35-EU , B : CK35H-EU

No.	Part Number	Desciption	Q'TY A	Q'TY B	Q'TY C	Q'TY D	Q'TY E	I.C	Remark
1	T2611-50021	BRACKET, WEIGHT FR	1 ~HT8100038	1 ~HT8900076					
1	T2611-50021BB	BRACKET, WEIGHT FR	1 HT8100039~	1 JT8900001~				<-X->	
2	04512-50140	WASHER, SPRING	4	4					
3	01173-51435	BOLT	4	4					M14*1.5*35
4	02176-50140	NUT	4	4					M14*P1.5
5	T2611-50031	BRACKET, TOWING HOOK	1	1					
6	04512-50120	WASHER, SPRING	4	4					M12
7	01176-51240	BOLT	4	4					M12P1.25*40
8	T2611-50041	PIN, CONNECTING	1	1					

----> Old replace New
<-X-> Not interchangeable
<-O-> Interchangeable with another part(s)
<---- New replace Old
<---> Interchangeable

CK30ME-T920A

BATTERY GROUP

(CK35-EU : ~ FT8100016)

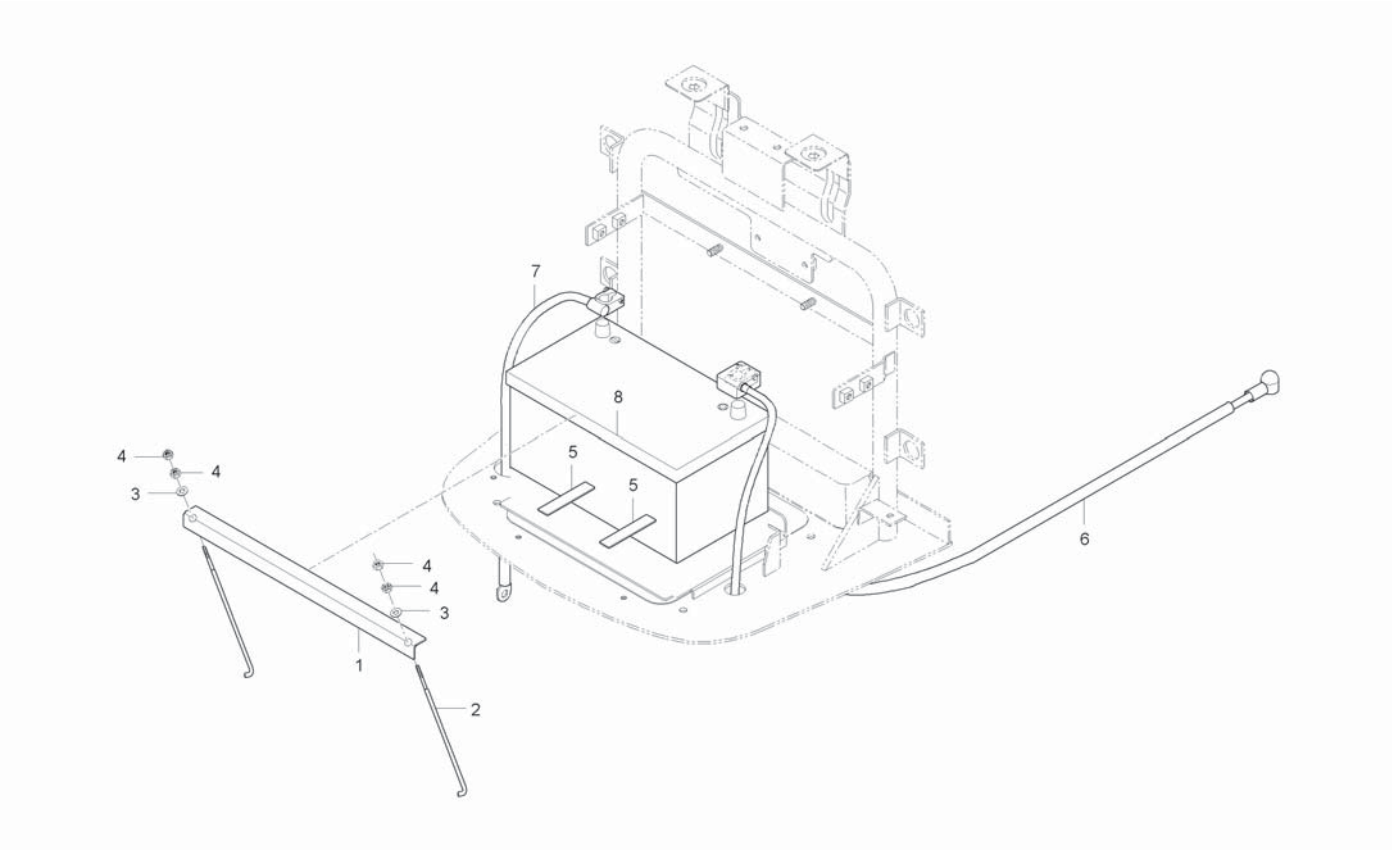

A : CK35-EU , B : CK35H-EU

No.	Part Number	Desciption	Q'TY A	Q'TY B	Q'TY C	Q'TY D	Q'TY E	I.C	Remark
1	T2185-50261	PLATE HOLD, BATTERY	1						
2	T4686-50241	BOLT, BATTERY HOLDER	2						
3	04015-50060	WASHER, PLAIN	2						
4	02056-50060	NUT	4						
5	T2610-50271	RUBBER, CUSHION	2						
6	T4682-69161	CORD, BATTERY	1						
7	T2195-69611	CABLE, BATTERY CIRCUITS	1						
8	C7910-42204	BATTERY ASSY	1						

----> Old replace New
<-X-> Not interchangeable
<-O-> Interchangeable with another part(s)
<---- New replace Old
<---> Interchangeable

CK35HE-T920A

BATTERY GROUP

(CK35-EU : GT8100001 ~)

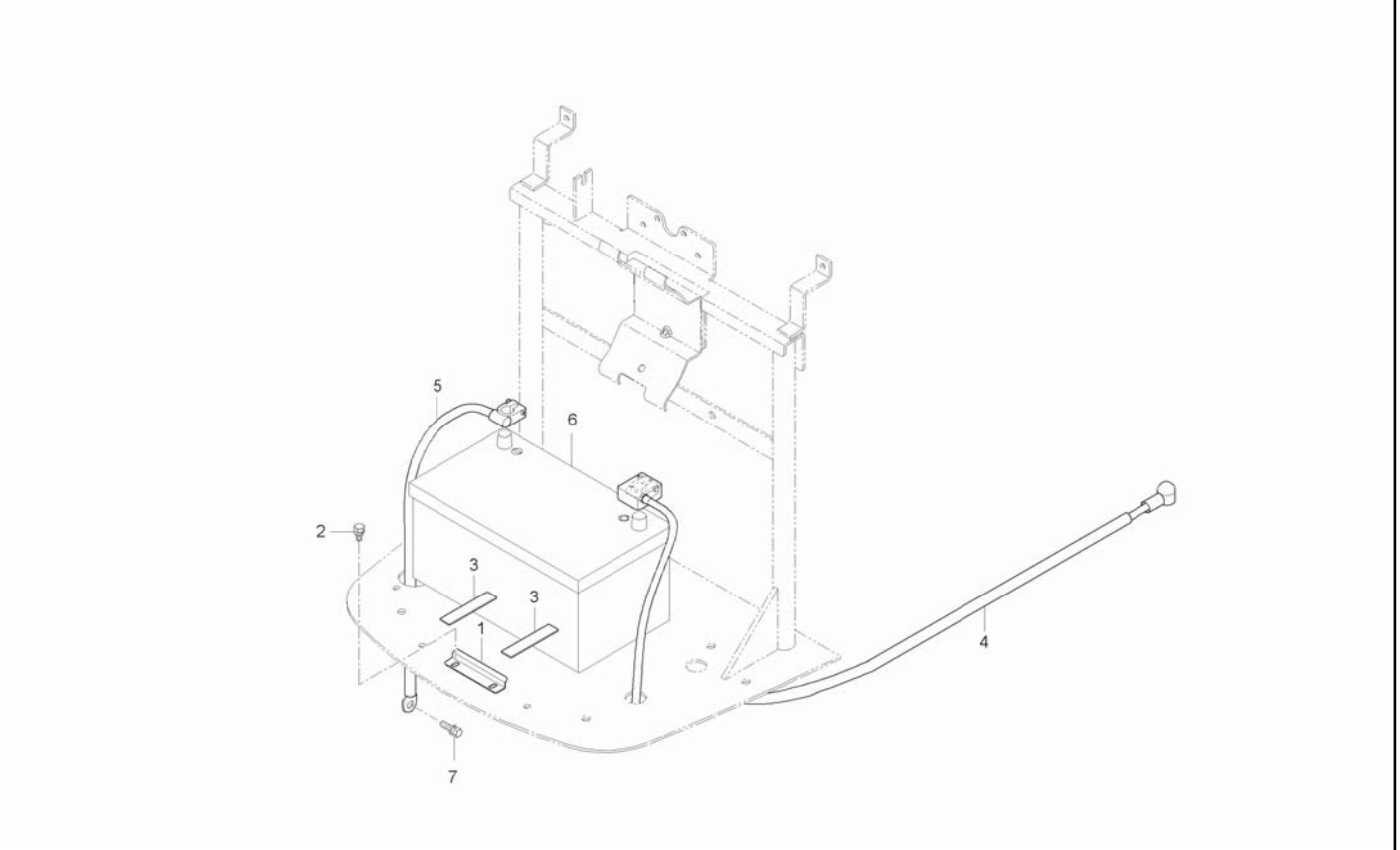

A : CK35-EU , B : CK35H-EU

No.	Part Number	Desciption	Q'TY A	Q'TY B	Q'TY C	Q'TY D	Q'TY E	I.C	Remark
1	T2350-50252	BRACKET, BATTERY	1 ~HT8100038	1 ~HT8900076					
1	T2350-50252ED	BRACKET, BATTERY	1 HT8100039~	1 JT8900001~				<-X->	
2	01754-50816	BOLT, FLANGE	2	2					M8*P1.25
3	T2610-50271	RUBBER, CUSHION	2	2					
3	T2380-50271	RUBBER, CUSHION	2	2				<----	
3	T2380-50272	RUBBER, CUSHION	2	2				---->	
4	T4682-69161	CORD, BATTERY	1	1					
4	T2185-69161	CORD, BATTERY	1	1				<----	
5	T2195-69611	CABLE, BATTERY CIRCUITS	1	1					
6	C7910-42204	BATTERY ASSY	1	1					
7	01754-50812	BOLT, FLANGE	1	1					M8*P1.25

----> Old replace New
<-X-> Not interchangeable
<-O-> Interchangeable with another part(s)
<---- New replace Old
<---> Interchangeable

CK35ME-T930A

ELECTRICITY SYSTEM 1GROUP

A : CK35-EU , B : CK35H-EU

No.	Part Number	Desciption	Q'TY A	Q'TY B	Q'TY C	Q'TY D	Q'TY E	I.C	Remark
1	T2145-69011	INSTRUMENT ASSY	1	1					
1	T2145-69012	ASSY PLATE,METER	1	1				<-X->	
1	T2145-69013	ASSY PLATE,METER	1	1				<--->	
2	T4684-69021004	BULB, 12VX3.4W CAP	2	2					
3	T2185-00101	BULB, 14VX1.4W	8	8					
4	T4710-69021013	LAMP, 14V3W	1	1					
5	T4520-75174	SWITCH, STARTING	1	1					
5	T4520-75175	SWITCH, STARTER	1	1				<----	
5	T4520-75176	SWITCH, STARTER	1	1				<----	
5	T5515-75171	SWITCH, STARTING	1	1				<-0->	
6	T4837-77772	COVER, STARTER SWITCH PROOF WATER	1	1					
6	T4837-77773	COVER, STARTER SWITCH PROOF WATER	1	1				<--->	
7	T4620-69024	COMBINATION SWITCH ASSY	1	1					
8	T4520-76553	HAZARD SWITCH ASSY	1	1					
9	38240-3241-1	SWITCH, HORN	1	1					
10	03024-50414	SCREW, WASHER	6	6					
11	02054-50040	NUT	6	6					M4*P0.7
12	T4625-75191	KEY	1	1					

----> Old replace New
<-X-> Not interchangeable
<-0-> Interchangeable with another part(s)
<---- New replace Old
<---> Interchangeable

X10.30ME-T930A

ELECTRICITY SYSTEM 1GROUP

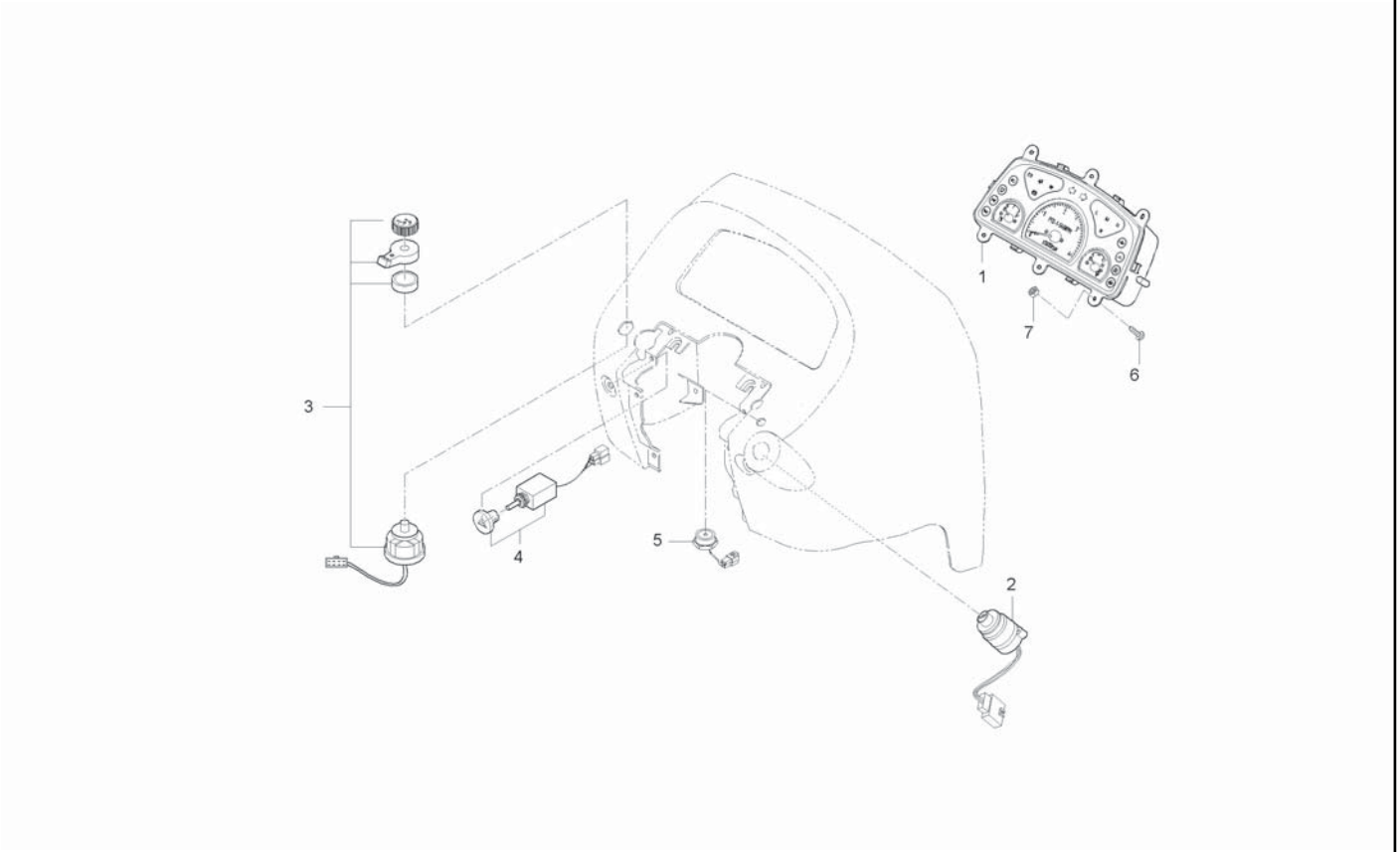

A : CK35-EU , B : CK35H-EU

No.	Part Number	Desciption	Q'TY A	Q'TY B	Q'TY C	Q'TY D	Q'TY E	I.C	Remark
1	T2185-69014	INSTRUMENT ASSY	1	1					
1	T2185-69015	INSTRUMENT ASSY	1	1				<-X->	
2	T5515-75171	SWITCH, STARTING	1	1					
3	T4620-69024	COMBINATION SWITCH ASSY	1	1					
3	T4620-69025	COMBINATION SWITCH ASSY	1	1				<----	
4	T4520-76553	HAZARD SWITCH ASSY	1	1					
5	38240-3241-1	SWITCH, HORN	1	1					
6	03024-50414	SCREW, WASHER	6	6					
7	02054-50040	NUT	6	6					M4*P0.7

----> Old replace New
<-X-> Not interchangeable
<-O-> Interchangeable with another part(s)
<---- New replace Old
<---> Interchangeable

X10.30HE-T940A ELECTRICITY SYSTEM 2 GROUP

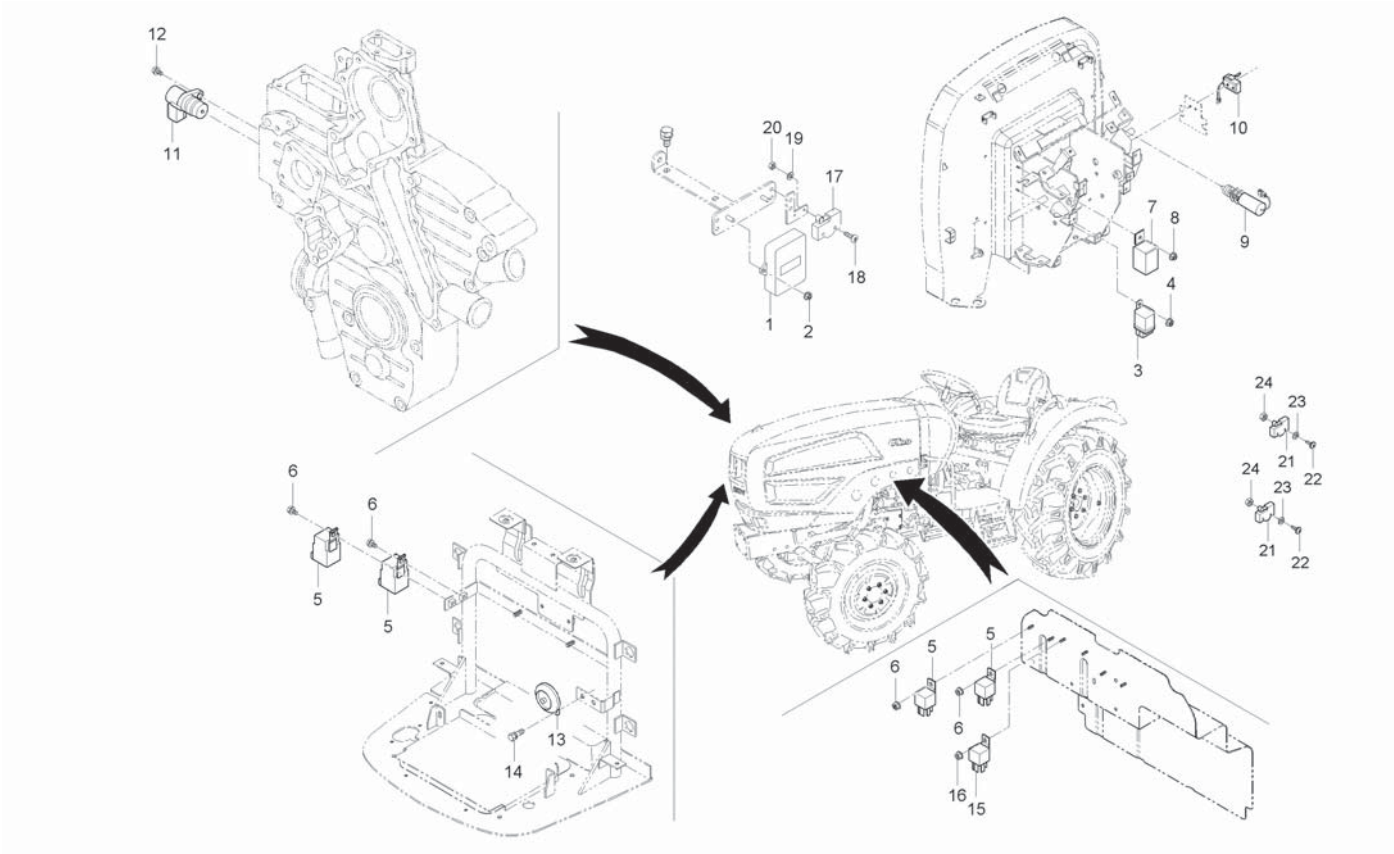

A : CK35-EU , B : CK35H-EU

No.	Part Number	Desciption	Q'TY A	Q'TY B	Q'TY C	Q'TY D	Q'TY E	I.C	Remark
1	T4686-69881	ASS'Y SAFETY CONTROL UNIT		1					
1	T4686-69882	ASS'Y SAFETY CONTROL UNIT		1				<----	
2	02751-50060	FLANGE NUT		2					M6*P1.0
3	T4121-31053	FLASHER UNIT, SENSOR		1					
4	02751-50060	FLANGE NUT		1					M6*P1.0
5	T4180-69961	RELAY(5P)		4					
6	02751-50060	FLANGE NUT		4					M6*P1.0
7	T4520-75031	RELAY, COOLER		1					
8	02751-50060	FLANGE NUT		1					M6*P1.0
9	T4520-41821	ASSY SWITCH,STOP		1					
10	T2198-68811	SWTICH, MICRO NC		1					
11	E6302-04931	SENSOR, ELECTRON PICK UP		1					
12	01754-50612	BOLT, FLANGE		1					M6*1.0
13	T4144-75951	ASSY HORN		1					
13	T4144-75952	ASSY HORN		1 MT8900001~				<-X->	
14	01123-50820	BOLT, WASHER		1					M8*P1.25
15	T4180-69951	RELAY(4P)		1					
16	02751-50060	FLANGE NUT		1					M6*P1.0
17	T2198-69251	SWTICH, MICRO		1					

----> Old replace New
<-X-> Not interchangeable
<-O-> Interchangeable with another part(s)
<---- New replace Old
<---> Interchangeable

X10.30HE-T940A

ELECTRICITY SYSTEM 2 GROUP

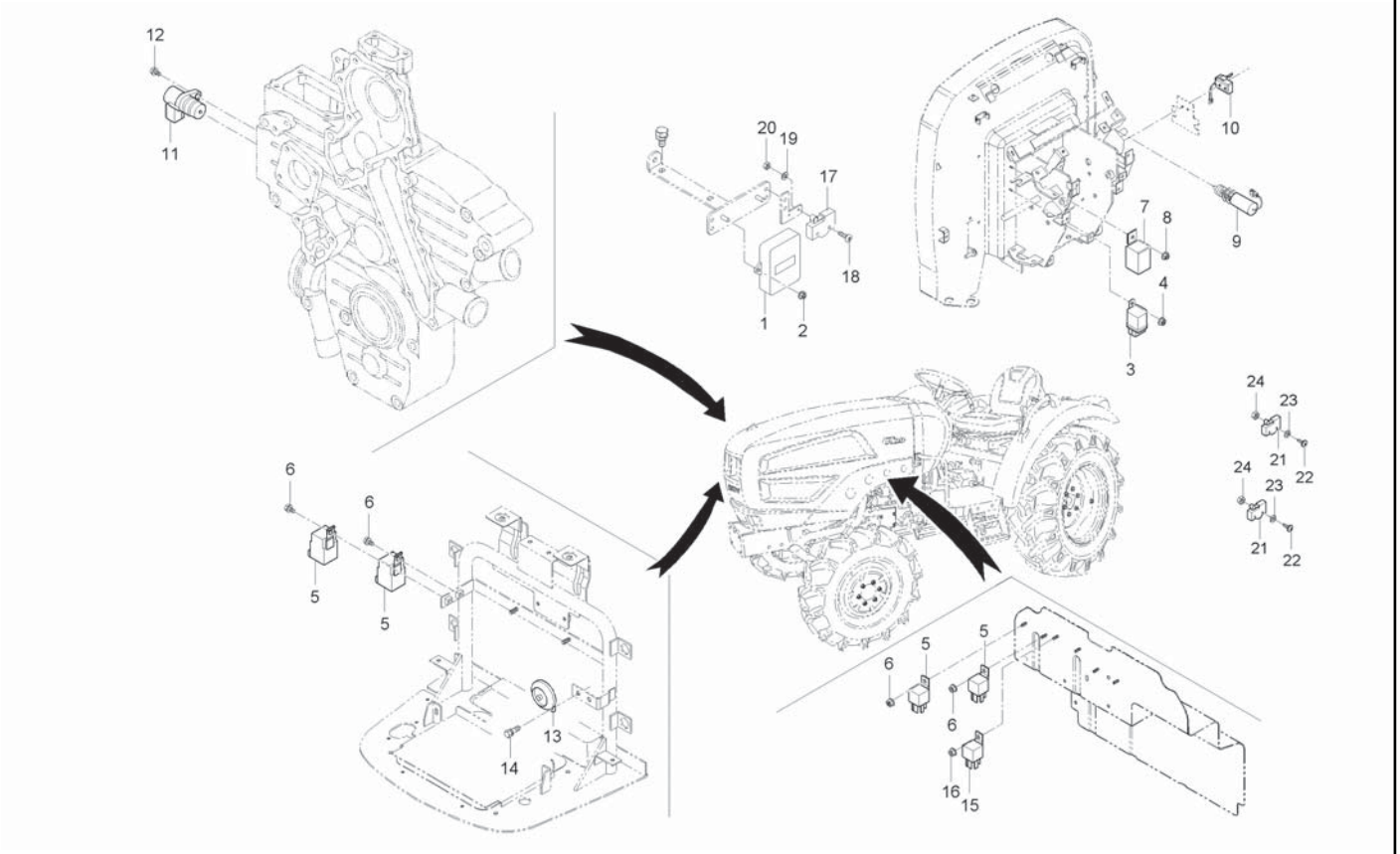

A : CK35-EU , B : CK35H-EU

No.	Part Number	Desciption	Q'TY A	Q'TY B	Q'TY C	Q'TY D	Q'TY E	I.C	Remark
18	03054-50316	SCREW		2					
19	04512-50030	WASHER, SPRING		2					
20	02054-50030	NUT		2					
21	C7170-83172	SWITCH, ZSERIES		1					
22	03054-50525	BOLT,SCREW		2					
23	04512-50040	WASHER, SPRING		2					M4
24	02054-50040	NUT		2					M4*P0.7

----> Old replace New
<-X-> Not interchangeable
<-O-> Interchangeable with another part(s)
<---- New replace Old
<---> Interchangeable

X10.30ME-T940A ELECTRICITY SYSTEM 2 GROUP

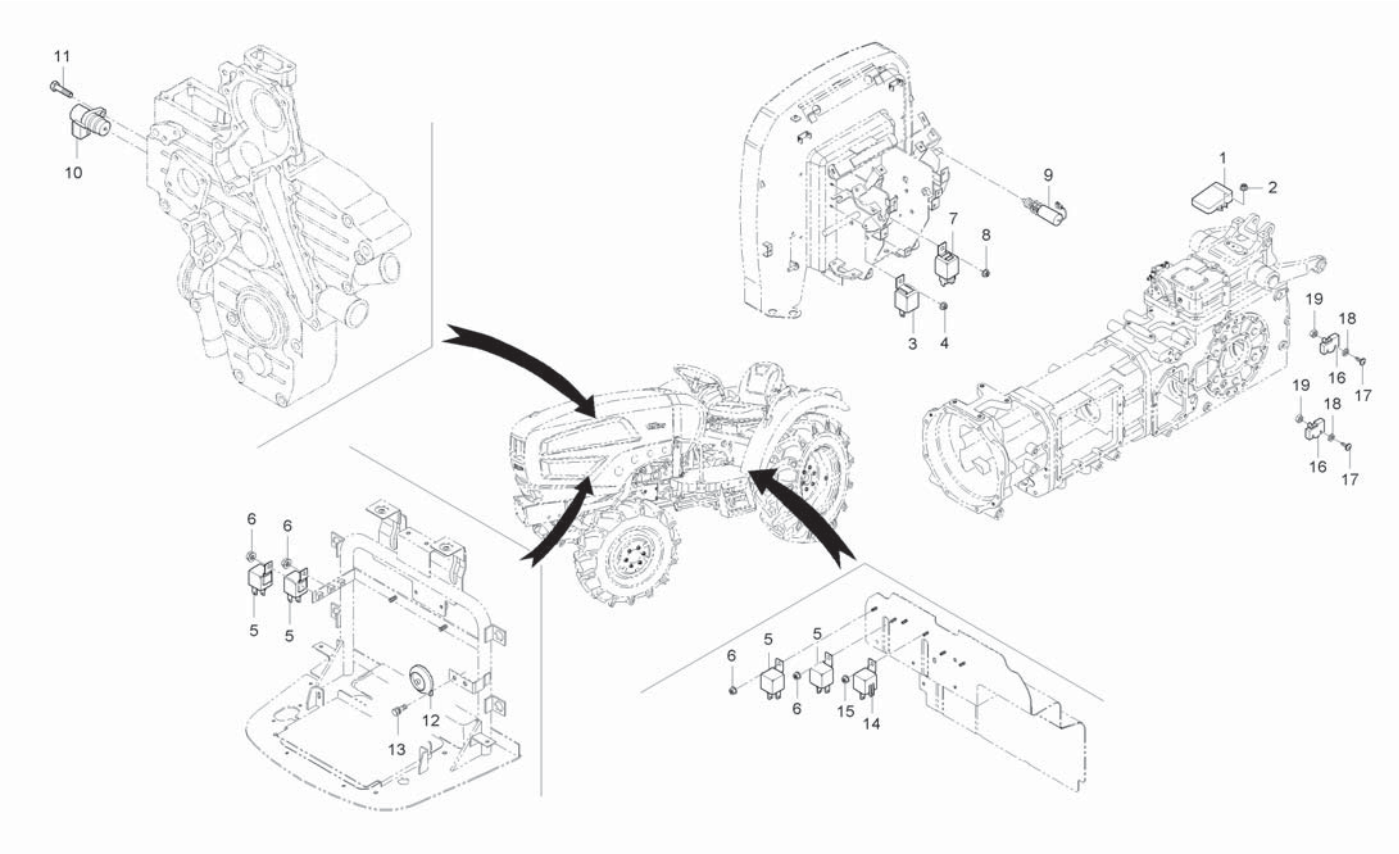

A : CK35-EU , B : CK35H-EU

No.	Part Number	Desciption	Q'TY A	Q'TY B	Q'TY C	Q'TY D	Q'TY E	I.C	Remark
1	T4686-69881	ASS'Y SAFETY CONTROL UNIT	1						
1	T4686-69882	ASS'Y SAFETY CONTROL UNIT	1					<----	
2	02751-50060	FLANGE NUT	2						
3	T4121-31053	FLASHER UNIT, SENSOR	1						
4	02751-50060	FLANGE NUT	1						
5	T4180-69961	RELAY(5P)	4						
6	02751-50060	FLANGE NUT	4						
7	T4520-75031	RELAY, COOLER	1						
8	02751-50060	FLANGE NUT	1						
9	T4520-41821	ASSY SWITCH,STOP	1						
10	E6302-04931	SENSOR, ELECTRON PICK UP	1						
11	01754-50612	BOLT, FLANGE	1						
12	T2611-75951	ASSY HORN	1						
13	01123-50820	BOLT, WASHER	1						
14	T4180-69951	RELAY(4P)	1						
15	02751-50060	FLANGE NUT	1						
16	C7170-83172	SWITCH, ZSERIES	2						
17	03054-50525	BOLT,SCREW	4						
18	04512-50040	WASHER, SPRING	4						

----> Old replace New
<-X-> Not interchangeable
<-O-> Interchangeable with another part(s)
<---- New replace Old
<---> Interchangeable

X10.30ME-T940A

ELECTRICITY SYSTEM 2 GROUP

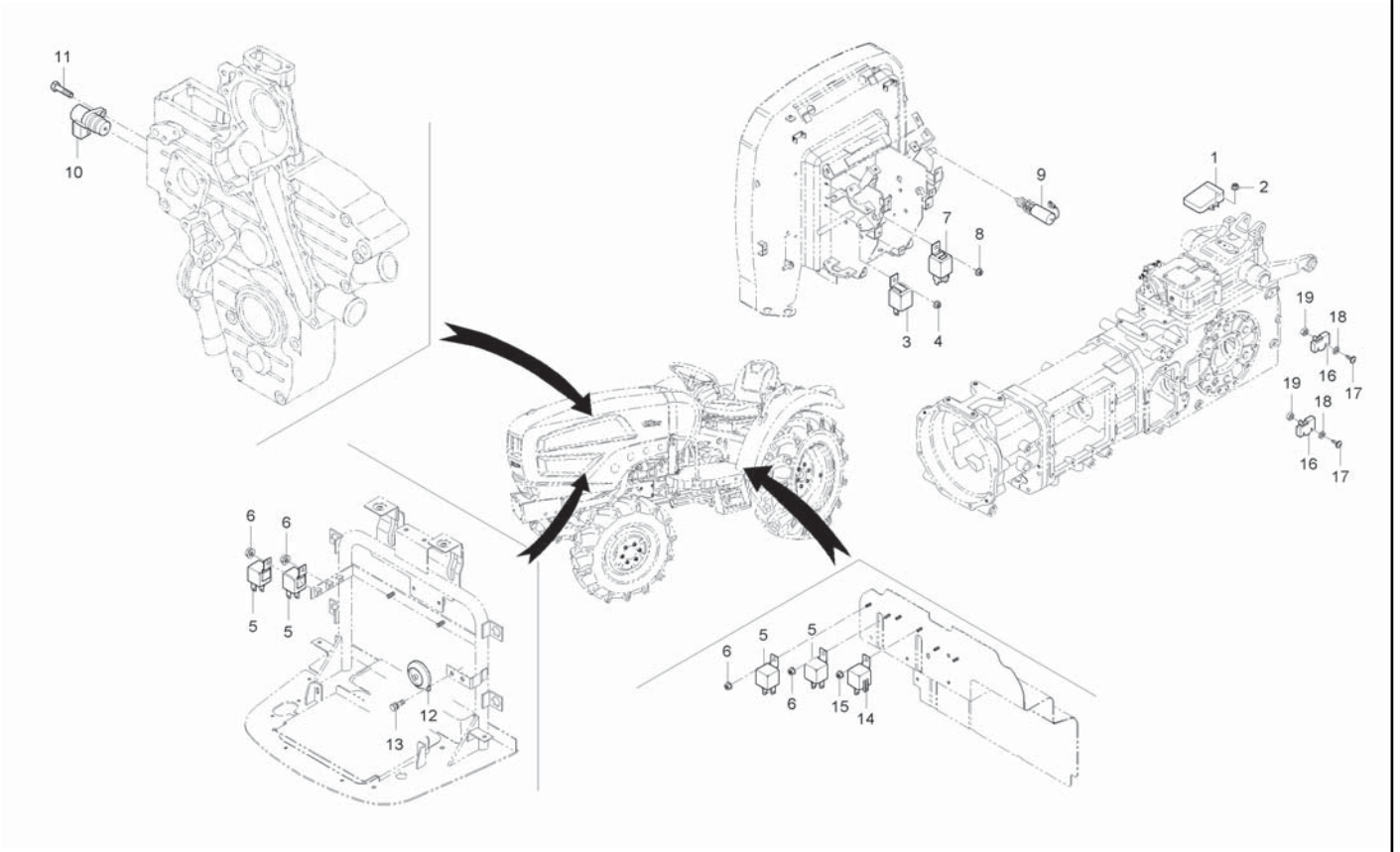

A : CK35-EU , B : CK35H-EU

No.	Part Number	Desciption	Q'TY A	Q'TY B	Q'TY C	Q'TY D	Q'TY E	I.C	Remark
19	02054-50040	NUT	4						

----> Old replace New
<-X-> Not interchangeable
<-O-> Interchangeable with another part(s)
<---- New replace Old
<---> Interchangeable

CK30HE-T940-1A ELECTRICITY SYSTEM 2 GROUP

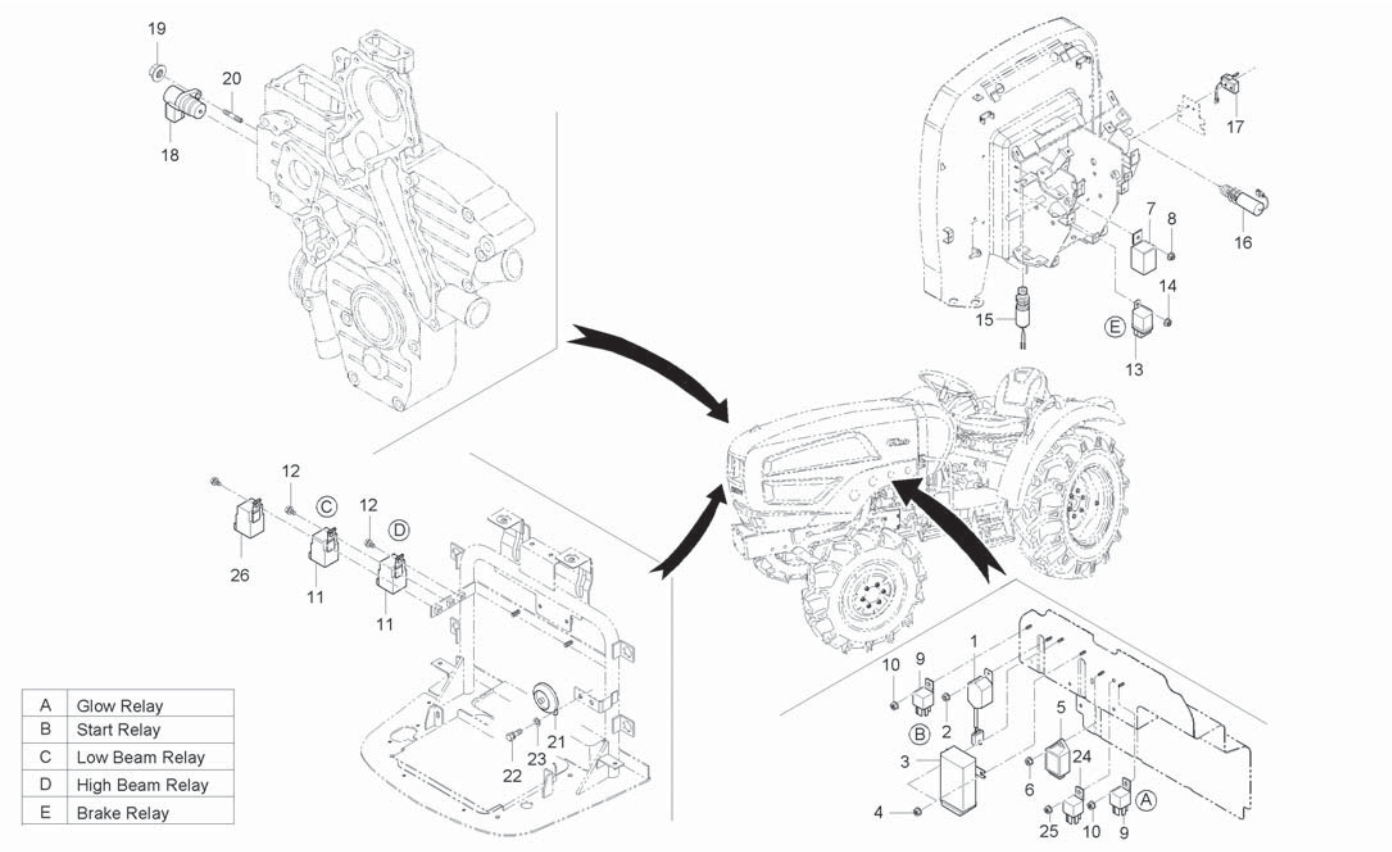

A : CK35-EU , B : CK35H-EU

No.	Part Number	Desciption	Q'TY A	Q'TY B	Q'TY C	Q'TY D	Q'TY E	I.C	Remark
1	15475-6024-2	RELAY, TIMER		1					
1	T2185-60241	RELAY, TIMER		1				<-X->	
2	02751-50060	FLANGE NUT		1					M6*P1.0
3	T4620-69054	CONTROLLER, PREHEATER		1					
3	T2185-69871	DISPLAY UNIT		1				<-X->	
3	T2185-69872	DISPLAY UNIT		1 ~HT8900036				<----	
3	T2185-69873	DISPLAY UNIT		1 HT8900037~				<-X->	
3	T2185-69874	DISPLAY UNIT		1				<--->	
3	T2185-69875	DISPLAY UNIT		1				<----	
4	02751-50060	FLANGE NUT		2					M6*P1.0
5	T2185-69252	CONTROLLER, FFTXHOUR		1					
6	02751-50060	FLANGE NUT		1					M6*P1.0
7	T4240-31052	FLASH UNIT		1					
7	T4121-31051	FLASHER UNIT, SENSOR		1				<--->	
7	T4121-31052	FLASHER UNIT, SENSOR		1				<----	
7	T4121-31053	FLASHER UNIT, SENSOR		1				<--->	
8	02751-50060	FLANGE NUT		1					M6*P1.0
9	C5510-43101	RELAY, PREHEATING		2					
9	C5510-43102	RELAY, PREHEATING		2				<--->	

----> Old replace New
<-X-> Not interchangeable
<-O-> Interchangeable with another part(s)
<---- New replace Old
<---> Interchangeable

CK30HE-T940-1A ELECTRICITY SYSTEM 2 GROUP

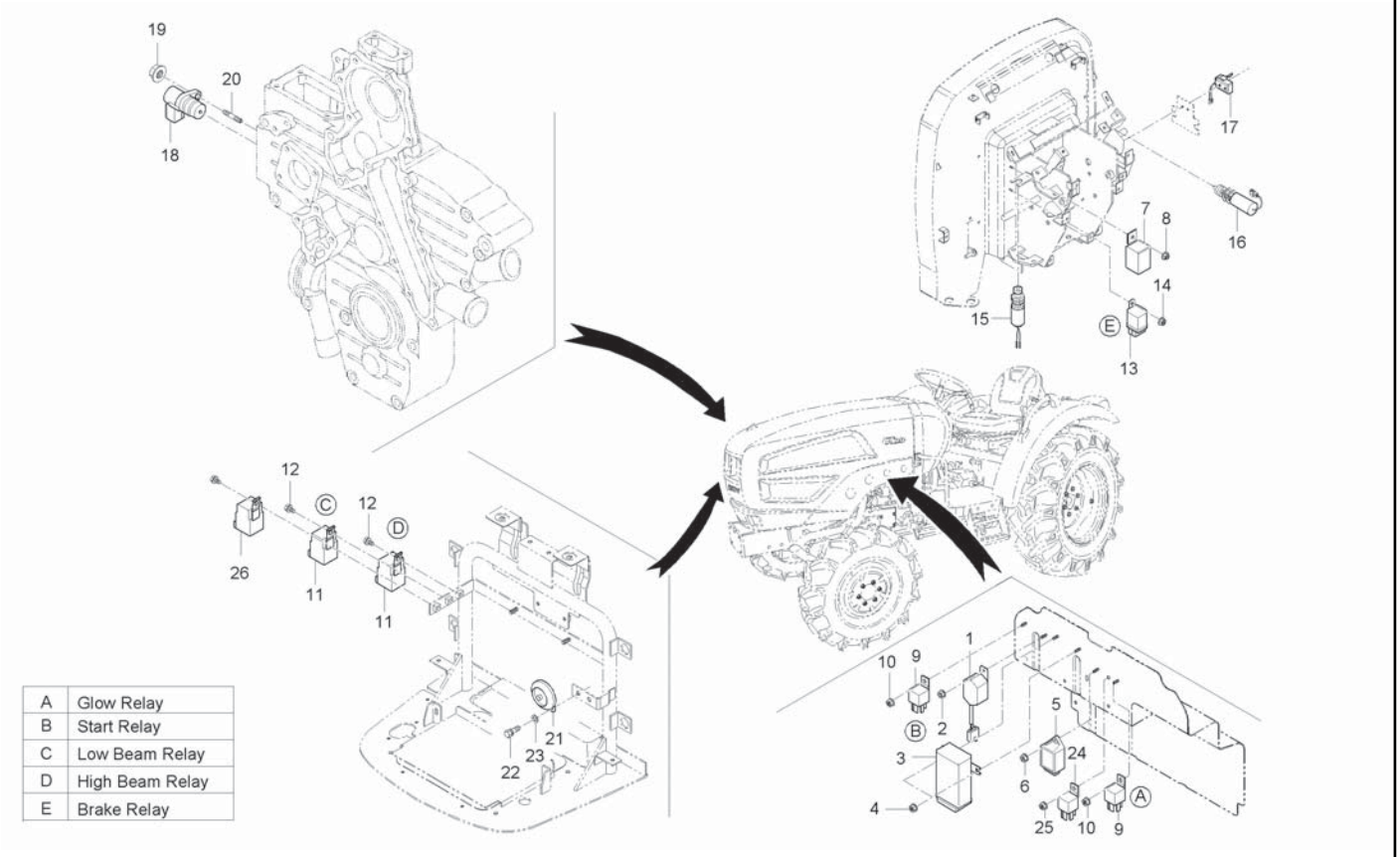

A : CK35-EU , B : CK35H-EU

No.	Part Number	Desciption	Q'TY A	Q'TY B	Q'TY C	Q'TY D	Q'TY E	I.C	Remark
9	T2185-69971	RELAY, 5P		2				<--->	
9	T2368-69961	RELAY, 5P 40A		2				<--->	
9	T2185-69971	RELAY, 5P		2				<--->	
9	T4180-69961	RELAY(5P)		2				<--->	
10	02751-50060	FLANGE NUT		2					M6*P1.0
11	T4710-69971	RELAY 4P, POWER		2					
11	T2185-69971	RELAY, 5P		2				<--->	
11	T2368-69961	RELAY, 5P 40A		2				<--->	
11	T2185-69971	RELAY, 5P		2				<--->	
11	T4180-69961	RELAY(5P)		2				<--->	
12	01754-50610	BOLT, FLANGE		2					M6*1.0
13	T4520-75031	RELAY, COOLER		1					
14	02751-50060	FLANGE NUT		1					M6*P1.0
15	T4520-75481	SWITCH, SAFE STARTER		1					
16	T4520-41821	ASSY SWITCH,STOP		1					
17	44512-6881-3	MICRO SWITCH		1					
17	T4930-68811	SWTICH, MICRO NC		1				<--->	
17	44512-6881-3	MICRO SWITCH		1 ~HT8900056				<--->	
17	T2198-68811	SWTICH, MICRO NC		1 HT8900057~				<-O->	

----> Old replace New
<-X-> Not interchangeable
<-O-> Interchangeable with another part(s)
<---- New replace Old
<---> Interchangeable

CK30HE-T940-1A ELECTRICITY SYSTEM 2 GROUP

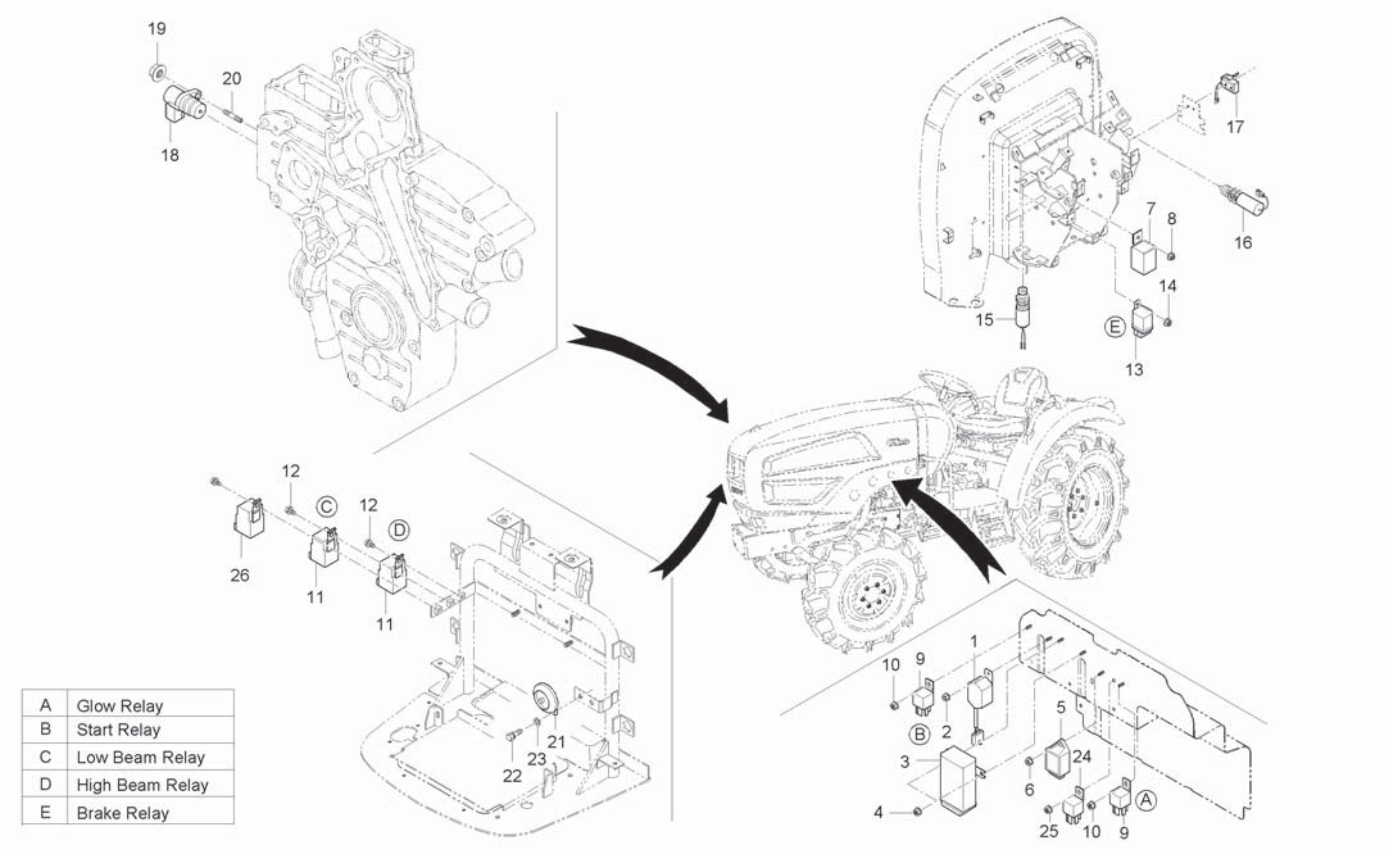

A : CK35-EU , B : CK35H-EU

No.	Part Number	Desciption	Q'TY A	Q'TY B	Q'TY C	Q'TY D	Q'TY E	I.C	Remark
18	E6302-04931	SENSOR, ELECTRON PICK UP		1					
19	02761-50060	FLANGE NUT		1					M6XP1.0
20	01513-50616	BOLT, STUD		1					DIA6*28
21	T2611-75951	ASSY HORN		1					
22	01123-50820	BOLT, WASHER		1					M8*P1.25
23	04013-50080	WASHER		1					M8
24	C5510-43101	RELAY, PREHEATING		1					
24	C5510-43102	RELAY, PREHEATING		1				<--->	
25	02751-50060	FLANGE NUT		1					M6*P1.0
26	T4351-43101	ACCESSORY RELAY ASSY		1					

----> Old replace New
<-X-> Not interchangeable
<-O-> Interchangeable with another part(s)
<---- New replace Old
<---> Interchangeable

CK30ME-T940-1A ELECTRICITY SYSTEM 2 GROUP

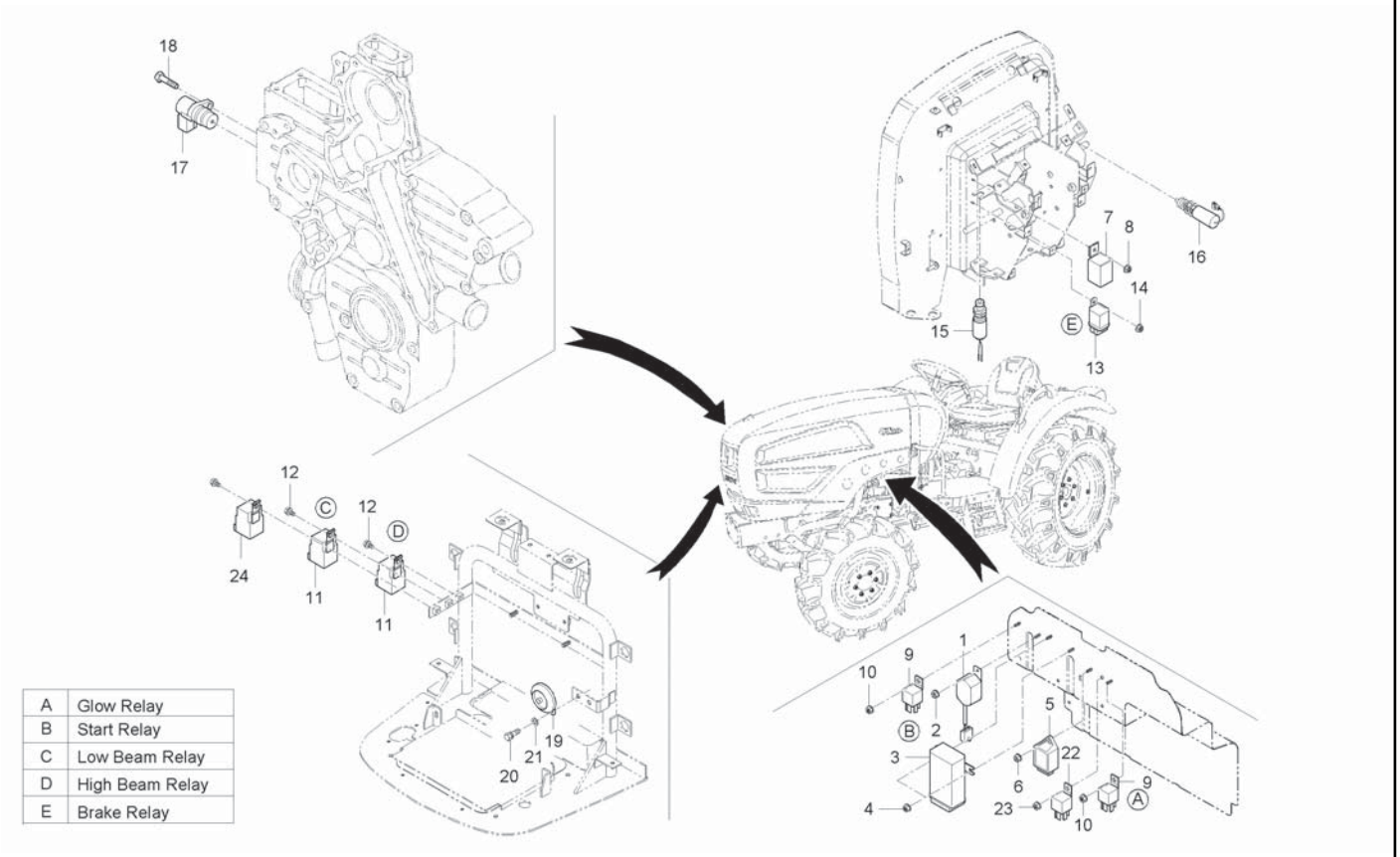

A : CK35-EU , B : CK35H-EU

No.	Part Number	Desciption	Q'TY A	Q'TY B	Q'TY C	Q'TY D	Q'TY E	I.C	Remark
1	15475-6024-2	RELAY, TIMER	1						
1	T2185-60241	RELAY, TIMER	1					<-X->	
2	02751-50060	FLANGE NUT	1						
3	T4620-69054	CONTROLLER, PREHEATER	1 ~FT8100016						
3	T2185-69871	DISPLAY UNIT	1 GT8100001~					<-X->	
3	T2185-69872	DISPLAY UNIT	1 ~HT8100038					<----	
3	T2185-69873	DISPLAY UNIT	1					<-X->	
3	T2185-69874	DISPLAY UNIT	1					<--->	
3	T2185-69875	DISPLAY UNIT	1					<----	
4	02751-50060	FLANGE NUT	2						
5	T2185-69252	CONTROLLER, FFTXHOUR	1						
6	02751-50060	FLANGE NUT	1						
7	T4240-31052	FLASH UNIT	1						
7	T4121-31051	FLASHER UNIT, SENSOR	1					<--->	
7	T4121-31052	FLASHER UNIT, SENSOR	1					<----	
7	T4121-31053	FLASHER UNIT, SENSOR	1					<--->	
8	02751-50060	FLANGE NUT	1						
9	C5510-43101	RELAY, PREHEATING	2						
9	C5510-43102	RELAY, PREHEATING	2					<--->	

----> Old replace New
<-X-> Not interchangeable
<-O-> Interchangeable with another part(s)
<---- New replace Old
<---> Interchangeable

CK30ME-T940-1A ELECTRICITY SYSTEM 2 GROUP

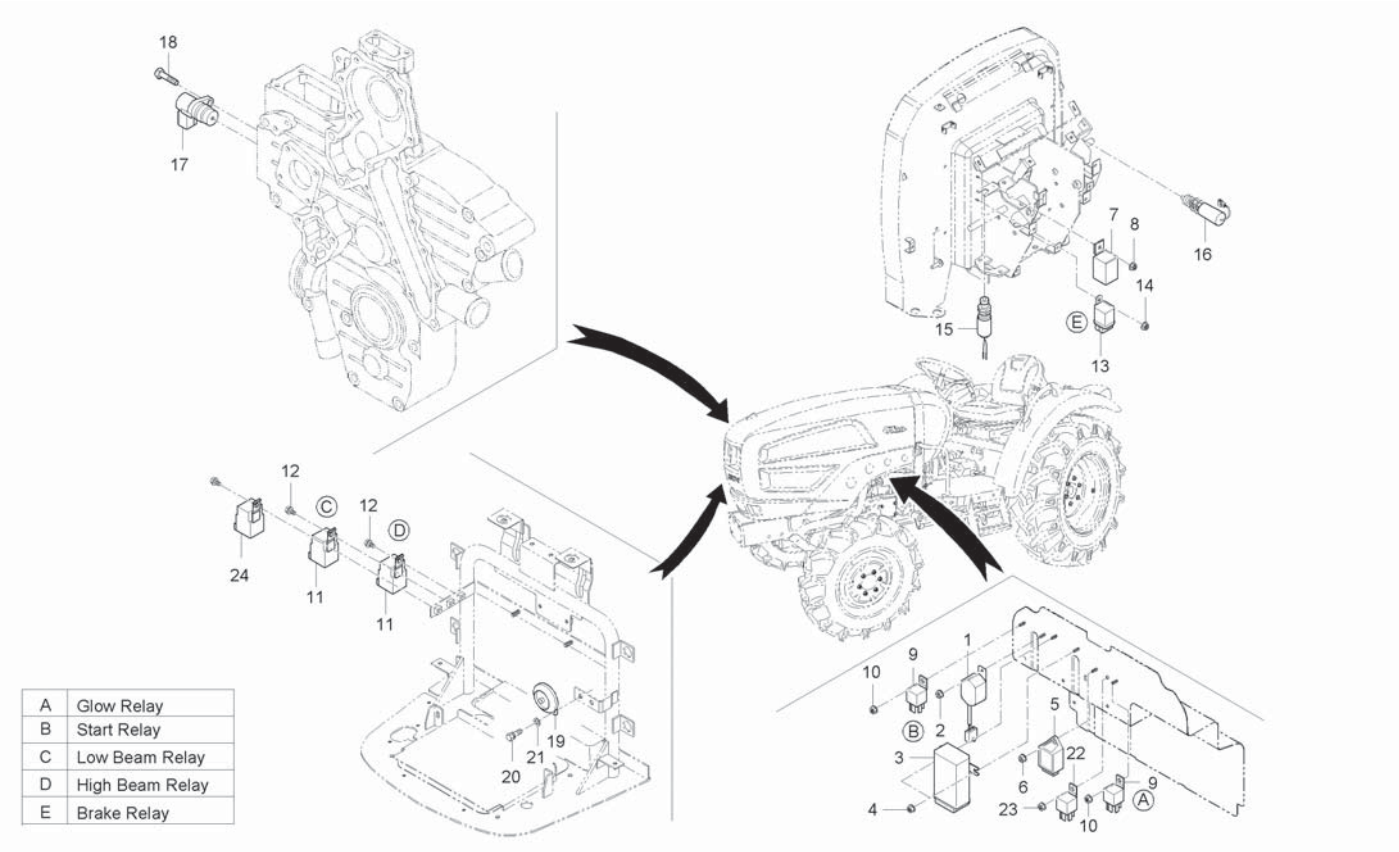

A : CK35-EU , B : CK35H-EU

No.	Part Number	Desciption	Q'TY A	Q'TY B	Q'TY C	Q'TY D	Q'TY E	I.C	Remark
9	T2185-69971	RELAY, 5P	2					<--->	
9	T2368-69961	RELAY, 5P 40A	2					<--->	
9	T2185-69971	RELAY, 5P	2					<--->	
9	T4180-69961	RELAY(5P)	2					<--->	
10	02751-50060	FLANGE NUT	2						
11	T4710-69971	RELAY 4P, POWER	2						
11	T2185-69971	RELAY, 5P	2					<--->	
11	T2368-69961	RELAY, 5P 40A	2					<--->	
11	T2185-69971	RELAY, 5P	2					<--->	
11	T4180-69961	RELAY(5P)	2					<--->	
12	01754-50610	BOLT, FLANGE	2						
13	T4520-75031	RELAY, COOLER	1						
14	02751-50060	FLANGE NUT	1						
15	T4520-75481	SWITCH, SAFE STARTER	1						
16	T4520-41821	ASSY SWITCH,STOP	1						
17	E6302-04931	SENSOR, ELECTRON PICK UP	1						
18	01754-50612	BOLT, FLANGE	1						
19	T2611-75951	ASSY HORN	1						
20	01123-50820	BOLT, WASHER	1						

----> Old replace New
<-X-> Not interchangeable
<-O-> Interchangeable with another part(s)
<---- New replace Old
<---> Interchangeable

CK30ME-T940-1A

ELECTRICITY SYSTEM 2 GROUP

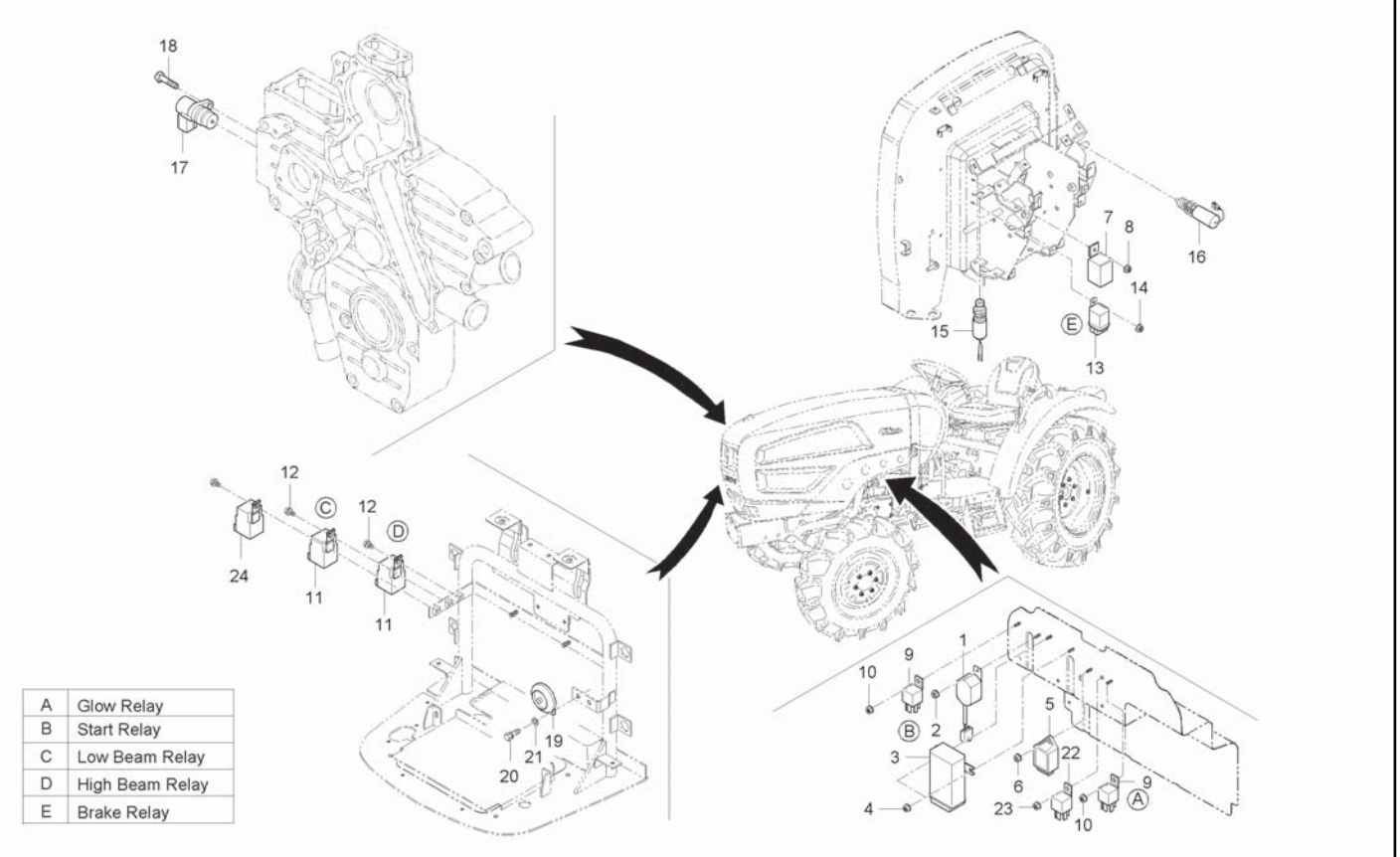

A : CK35-EU , B : CK35H-EU

No.	Part Number	Desciption	Q'TY A	Q'TY B	Q'TY C	Q'TY D	Q'TY E	I.C	Remark
21	04013-50080	WASHER	1						
22	C5510-43101	RELAY, PREHEATING	1						
22	C5510-43102	RELAY, PREHEATING	1					<--->	
23	02751-50060	FLANGE NUT	1						
24	T4351-43101	ACCESSORY RELAY ASSY	1						

----> Old replace New
<-X-> Not interchangeable
<-O-> Interchangeable with another part(s)
<---- New replace Old
<---> Interchangeable

CK35ME-T950A

ELECTRICITY SYSTEM 3 GROUP

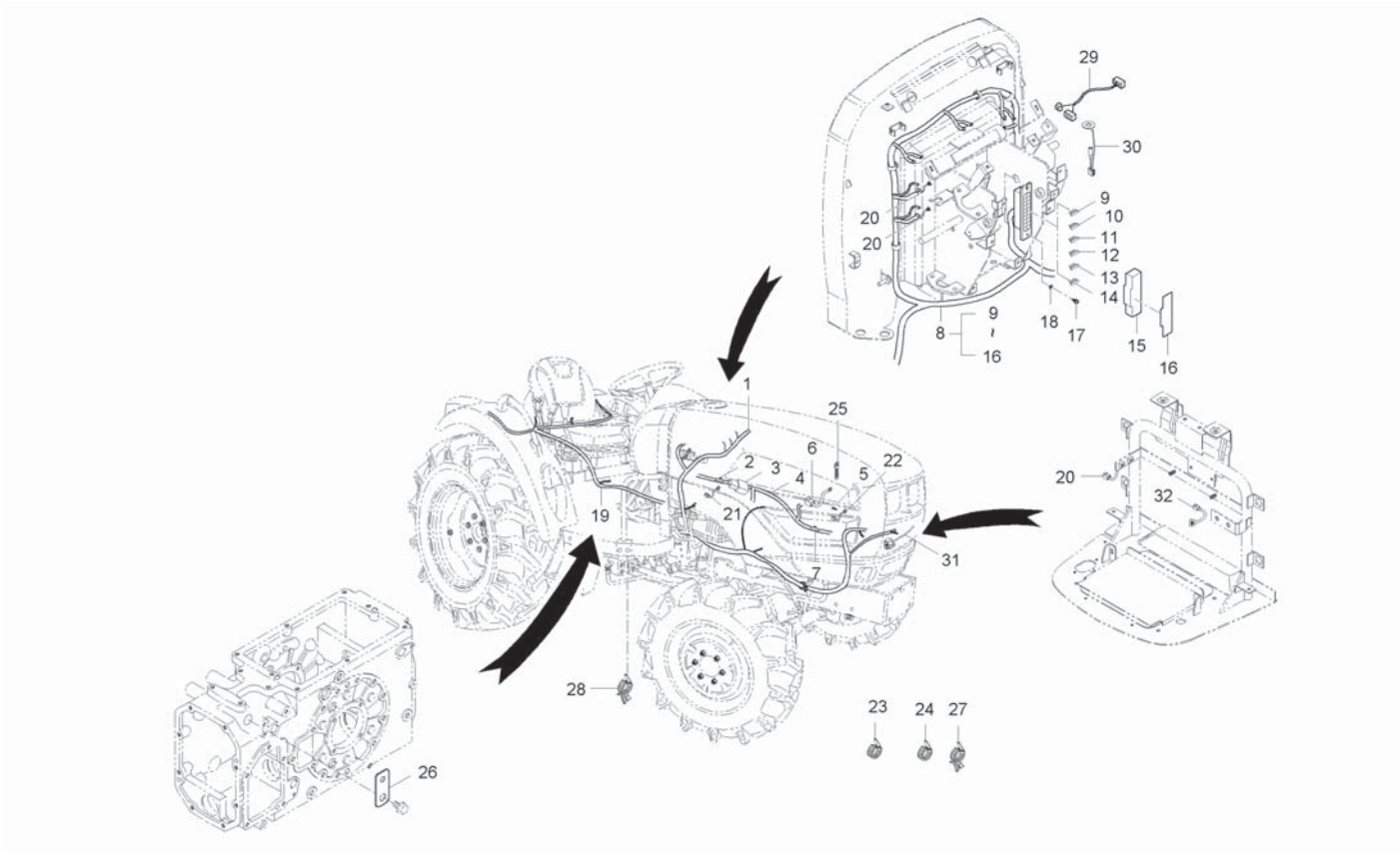

A : CK35-EU , B : CK35H-EU

No.	Part Number	Desciption	Q'TY A	Q'TY B	Q'TY C	Q'TY D	Q'TY E	I.C	Remark
1	T2185-69394	WIRE HARNESS ASSY 2, BONNET	1 ~FT8100016						
1	T2185-69395	WIRE HARNESS ASSY 2, BONNET	1 GT8100001~	1				<-X->	
1	T2185-69387	WIRE HARNESS ASSY 1, BONNET	1	1				<-X->	
1	T2185-69388	WIRE HARNESS ASSY 1, BONNET	1	1				<-X->	
2	T4620-69331	DIODE, 2P	2	2					
3	52794-4242-1	FUSE, 60A	1	1					
4	T4686-69491	HARNESS WIRE, GENERATOR CABLE	1	1					
5	03024-50512	SCREW, WASHER	1	1					
6	T2185-69385	WIRE HARNESS ASSY 1, BONNET	1						
6	T2185-69387	WIRE HARNESS ASSY 1, BONNET	1	1				<--->	
7	T4620-69331	DIODE, 2P	1	1					
7	T4145-69331	DIODE, 2P	1	1				<-X->	
8	T2145-69421	PANEL WIRE HARNESS ASSY	1 ~HT8100038						
8	T2145-69424	PANEL WIRE HARNESS ASSY	1 HT8100039~	1				<-X->	
8	T2145-69425	6	1	1				<--->	
9	T4260-33631	FUSE, 10A	1	1					
10	35820-7556-1	FUSE, 15A	2	2					
11	36919-5665-0	FUSE, 20A	1	1					
12	36919-5666-1	FUSE 25A	1	1					

----> Old replace New
<-X-> Not interchangeable
<-O-> Interchangeable with another part(s)
<---- New replace Old
<---> Interchangeable

CK35ME-T950A

ELECTRICITY SYSTEM 3 GROUP

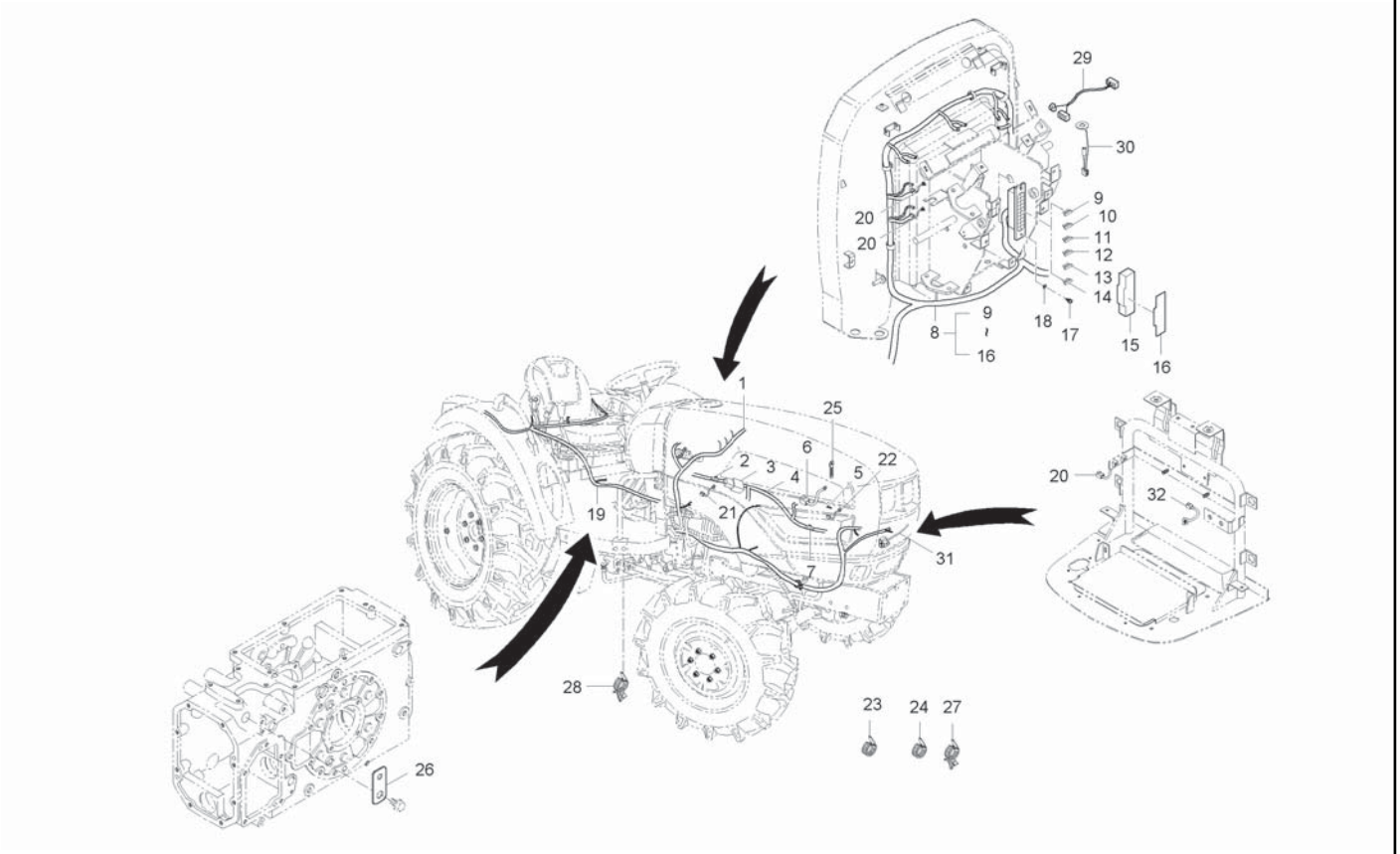

A : CK35-EU , B : CK35H-EU

No.	Part Number	Desciption	Q'TY A	Q'TY B	Q'TY C	Q'TY D	Q'TY E	I.C	Remark
13	T2185-33651	FUSE, 5A	3	3					
14	T2185-33661	FUSE, 7.5A	4	4					
15	P5370-69321	COVER, FUSE BOX	1	1					
16	T2185-69223	LABEL, FUSE BOX ENGLISH	1	1					
17	03027-50516	SCREW	2	2					
18	04012-50050	WASHER, PLAIN	2	2					
19	T2185-69446	FENDER WIRE HARNESS ASSY	1	1					
20	T4620-69462	HARNESS WIRE 2, CABLE	3	3					
21	T4620-69471	HARNESS WIRE 3, CABLE	1	1					
21	T4620-69472	WIRE HARNESS 3	1	1				<--->	
22	T2185-69582	HARNESS WIRE 5, CABLE	1	1					
23	T2185-82561	BAND,CORD	6	6					
24	T2185-82551	BAND,CORD	10	10					
25	37155-3447-1	CLAMP,CORD	1	1					
26	T2185-69771	BRACKET, WIRE HARNESS	2	2					
27	P5370-82551	BAND	1	1					
28	T2185-82571	CABLE, STRAP	2	2					
29	P5370-68481	WIRE HARNESS, CONNECTION	1	1					
30	T2145-69471	WIRE HARNESS, CONNECTION	1	1					

----> Old replace New
<-X-> Not interchangeable
<-O-> Interchangeable with another part(s)
<---- New replace Old
<---> Interchangeable

CK35ME-T950A

ELECTRICITY SYSTEM 3 GROUP

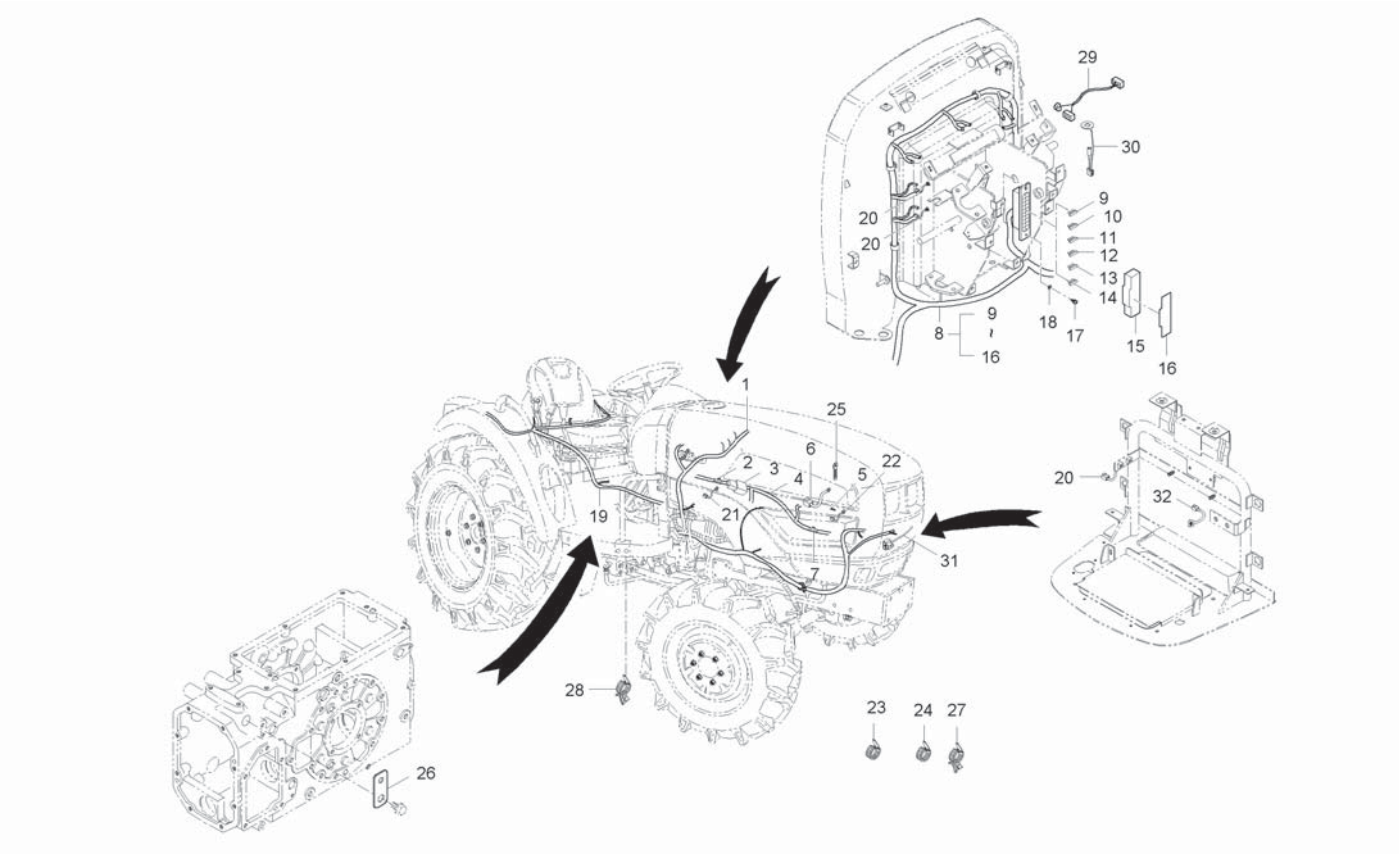

A : CK35-EU , B : CK35H-EU

No.	Part Number	Desciption	Q'TY A	Q'TY B	Q'TY C	Q'TY D	Q'TY E	I.C	Remark
31	52320-4142-2	HARNESS WIRE, HORN	1	1					
31	T2145-69472	WIRE HARNESS, CONNECTION	1	1				<----	
32	T4620-69362	WIRE HARNESS 1	1	1					

----> Old replace New
<-X-> Not interchangeable
<-O-> Interchangeable with another part(s)
<---- New replace Old
<---> Interchangeable

X10.30ME-T950A

ELECTRICITY SYSTEM 1GROUP

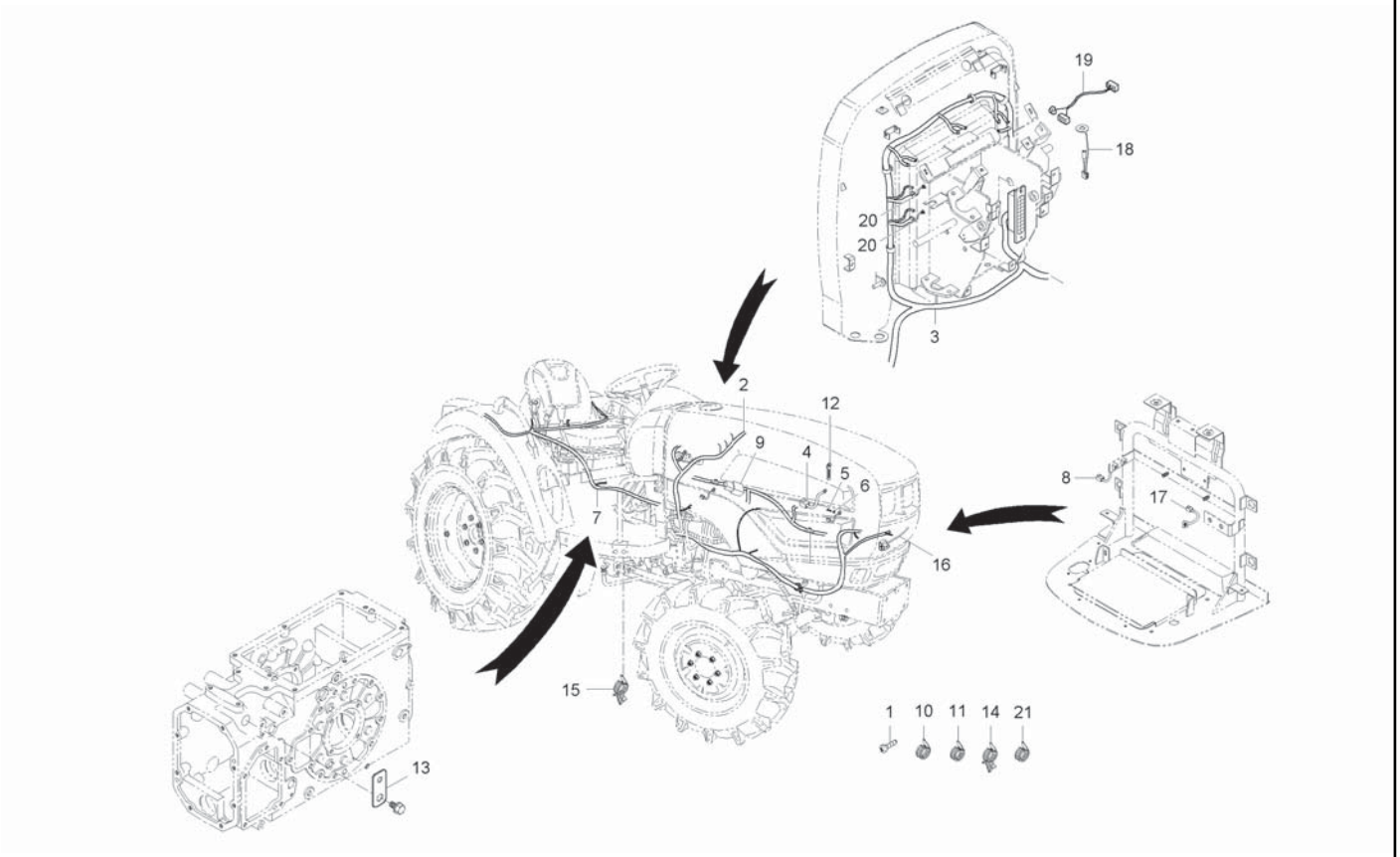

A : CK35-EU , B : CK35H-EU

No.	Part Number	Desciption	Q'TY A	Q'TY B	Q'TY C	Q'TY D	Q'TY E	I.C	Remark
1	03024-50512	SCREW, WASHER	1	1					
2	T2185-68381	ASS'Y WIRE HARNESS BONNET	1	1					
3	T2185-68421	ASSY HARNESS	1	1					
4	T4686-69491	HARNESS WIRE, GENERATOR CABLE	1	1					
5	03027-50516	SCREW	2	2					
6	04012-50050	WASHER, PLAIN	2	2					
7	T2185-68441	ASSY WIRE HARNESS,FENDER	1	1					
7	T2185-68442	ASSY WIRE HARNESS,FENDER	1	1				<----	
8	T4620-69462	HARNESS WIRE 2, CABLE	5	5					
9	T4620-69472	WIRE HARNESS 3	1	1					
10	T2185-82561	BAND,CORD	6	6					
11	T2185-82551	BAND,CORD	10	10					
12	37155-3447-1	CLAMP,CORD	1	1					
13	T2185-69771	BRACKET, WIRE HARNESS	2	2					
14	P5370-82551	BAND	1	1					
15	T2185-82571	CABLE, STRAP	2	2					
16	52320-4142-2	HARNESS WIRE, HORN	1	1					
17	T4620-69362	WIRE HARNESS 1	1	1					
18	P5370-68481	WIRE HARNESS, CONNECTION	1	1					

----> Old replace New
<-X-> Not interchangeable
<-O-> Interchangeable with another part(s)
<---- New replace Old
<---> Interchangeable

X10.30ME-T950A ELECTRICITY SYSTEM 1GROUP

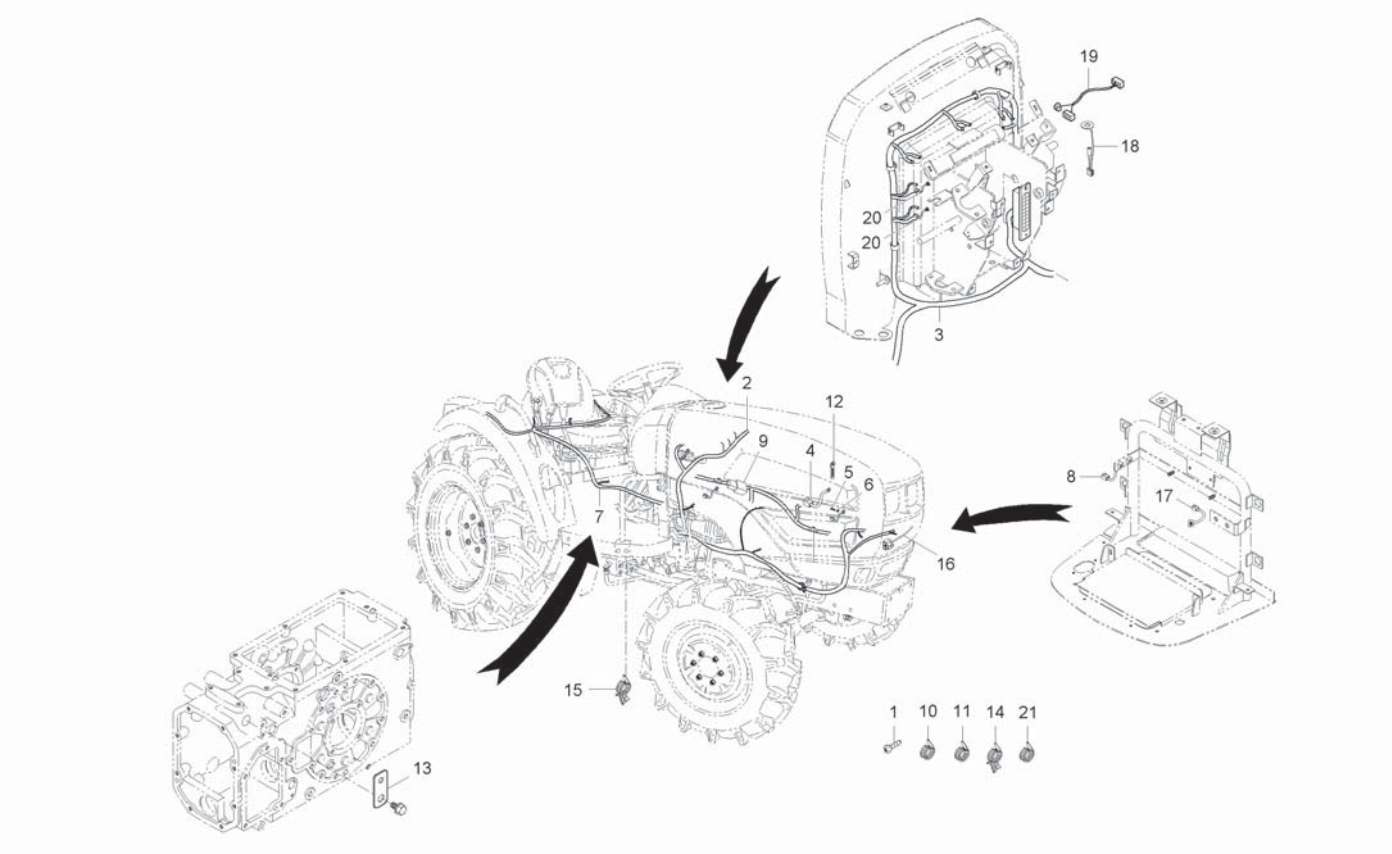

A : CK35-EU , B : CK35H-EU

No.	Part Number	Desciption	Q'TY A	Q'TY B	Q'TY C	Q'TY D	Q'TY E	I.C	Remark
19	T2185-69473	WIRE HARNESS SUB	1	1					
19	T2185-69474	WIRE HARNESS SUB	1	1				<-X->	
20	37155-3447-1	CLAMP,CORD	1	1					
21	T2185-82561	BAND,CORD	1	1					

----> Old replace New
<-X-> Not interchangeable
<-O-> Interchangeable with another part(s)
<---- New replace Old
<---> Interchangeable

CK30ME-T960-1A

LIGHT LH GROUP

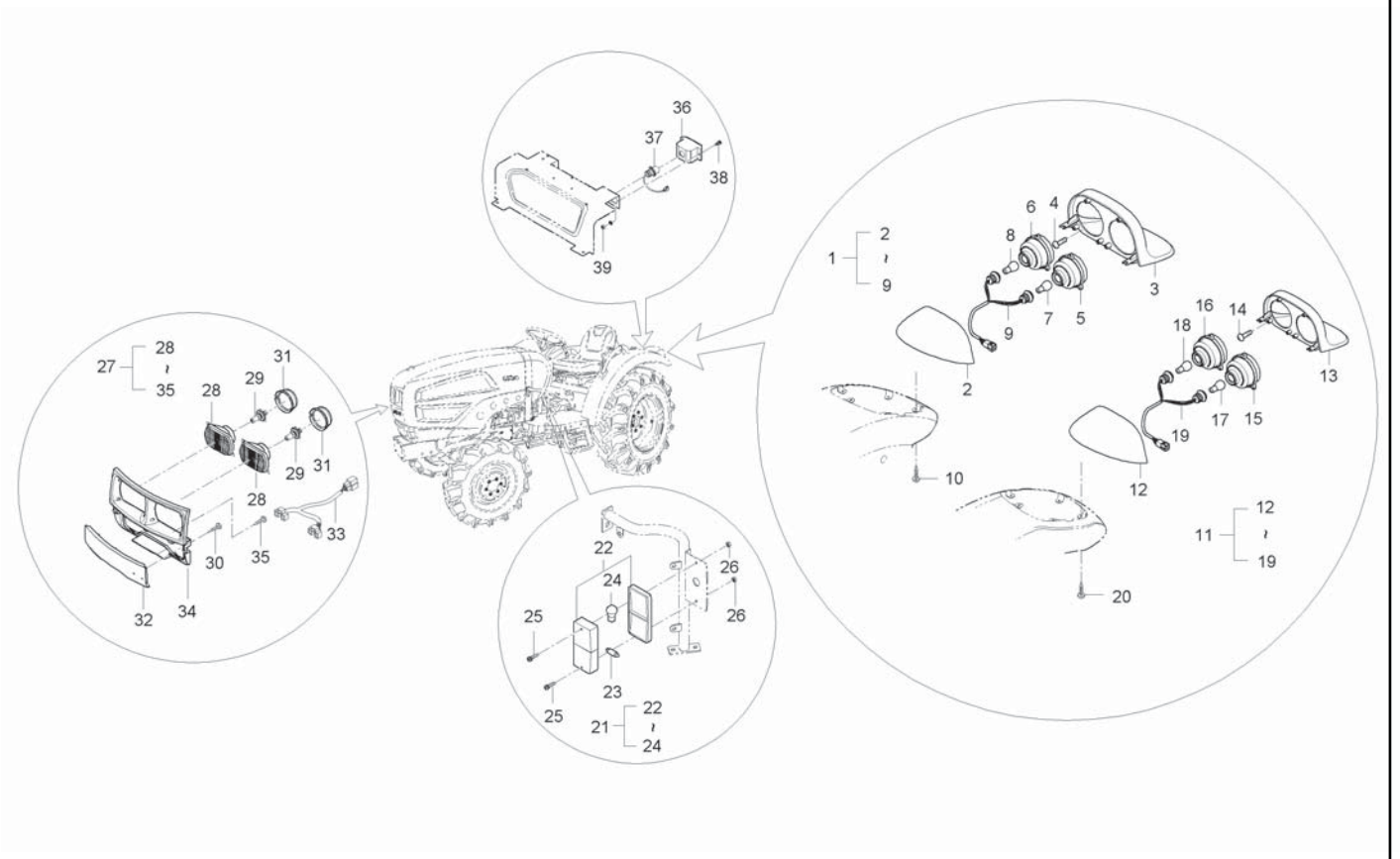

A : CK35-EU , B : CK35H-EU

No.	Part Number	Desciption	Q'TY A	Q'TY B	Q'TY C	Q'TY D	Q'TY E	I.C	Remark
1	T2185-69713	REAR LAMP ASSY, LH	1	1					
1	T2185-69732	REAR LAMP ASSY, LH	1 ~HT8100038	1 ~HT8900076				<----	
1	T2185-69732BB	REAR LAMP ASSY, LH	1 HT8100039~	1 JT8900001~				<-X->	
2	T2185-95111	COVER 1, REAR LAMP LH	1	1					
3	T2185-95131	COVER 2, REAR LAMP LH	1	1					
4	38240-1883-1	SCREW	9	9					
5	T2185-69651	LAMP, DIRECTION RR	1	1					
6	T2185-69661	LAMP, TAIL AND STOP	1	1					
6	T2185-68661	LAMP, TAIL AND STOP	1	1				<----	
7	T2185-79011	BULB, 12VXP21W	1	1					
8	T2185-79051	BULB, 12VXP21X5W	1	1					
9	T2185-69692	HARNESS WIRE, TAIL LAMP	1	1					
10	38240-1883-1	SCREW	5	5					
11	T2185-69723	REAR LAMP ASSY, RH	1	1					
11	T2185-69742	REAR LAMP ASSY, RH	1 ~HT8100038	1 ~HT8900076				<----	
11	T2185-69742BB	REAR LAMP ASSY, RH	1 HT8100039~	1 JT8900001~				<-X->	
12	T2185-95121	COVER 1, REAR LAMP RH	1	1					
13	T2185-95141	COVER 2, REAR LAMP RH	1	1					
14	38240-1883-1	SCREW	9	9					

----> Old replace New
<-X-> Not interchangeable
<-O-> Interchangeable with another part(s)
<---- New replace Old
<---> Interchangeable

CK30ME-T960-1A

LIGHT LH GROUP

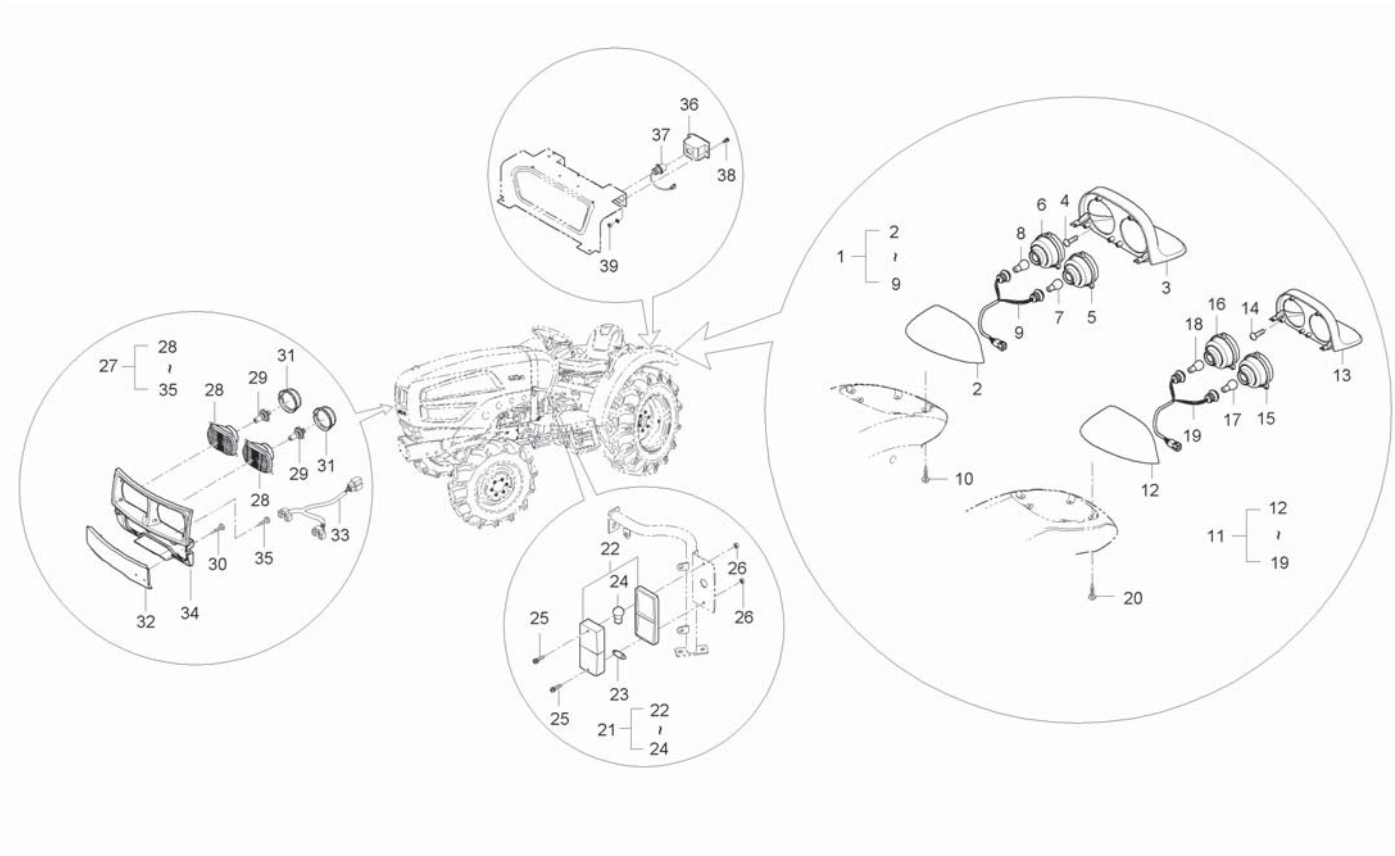

A : CK35-EU , B : CK35H-EU

No.	Part Number	Desciption	Q'TY A	Q'TY B	Q'TY C	Q'TY D	Q'TY E	I.C	Remark
15	T2185-69651	LAMP, DIRECTION RR	1	1					
16	T2185-69661	LAMP, TAIL AND STOP	1	1					
16	T2185-68661	LAMP, TAIL AND STOP	1	1				<----	
17	T2185-79011	BULB, 12VXP21W	1	1					
18	T2185-79051	BULB, 12VXP21X5W	1	1					
19	T2185-69692	HARNESS WIRE, TAIL LAMP	1	1					
20	38240-1883-1	SCREW	5	5					
21	T2185-69071	COMBI LIGHT ASSY, FR	2	2					
22	T2611-69061	LAMP, HAZARD	2	2					
23	T2611-79041	BULB, 12VXC5W	2	2					
24	T2611-79011	BULB, 12VXP21W	2	2					
25	03024-50412	SCREW, WASHER	4	4					
26	02054-50040	NUT	4	4					M4*P0.7
26	02761-50040	NUT, FLANGE	4	4				<--->	
27	T2185-69562	HEADLIGHT ASSY	1	1					
27	T2185-69563	HEADLIGHT ASSY	1	1				<--->	
28	T2350-69551	HEADLIGHT	2	2					
29	T2350-69571	BULB, 12VX55X60W	2	2					
30	38240-1883-1	SCREW	6	6					

----> Old replace New
<-X-> Not interchangeable
<-O-> Interchangeable with another part(s)
<---- New replace Old
<---> Interchangeable

CK30ME-T960-1A

LIGHT LH GROUP

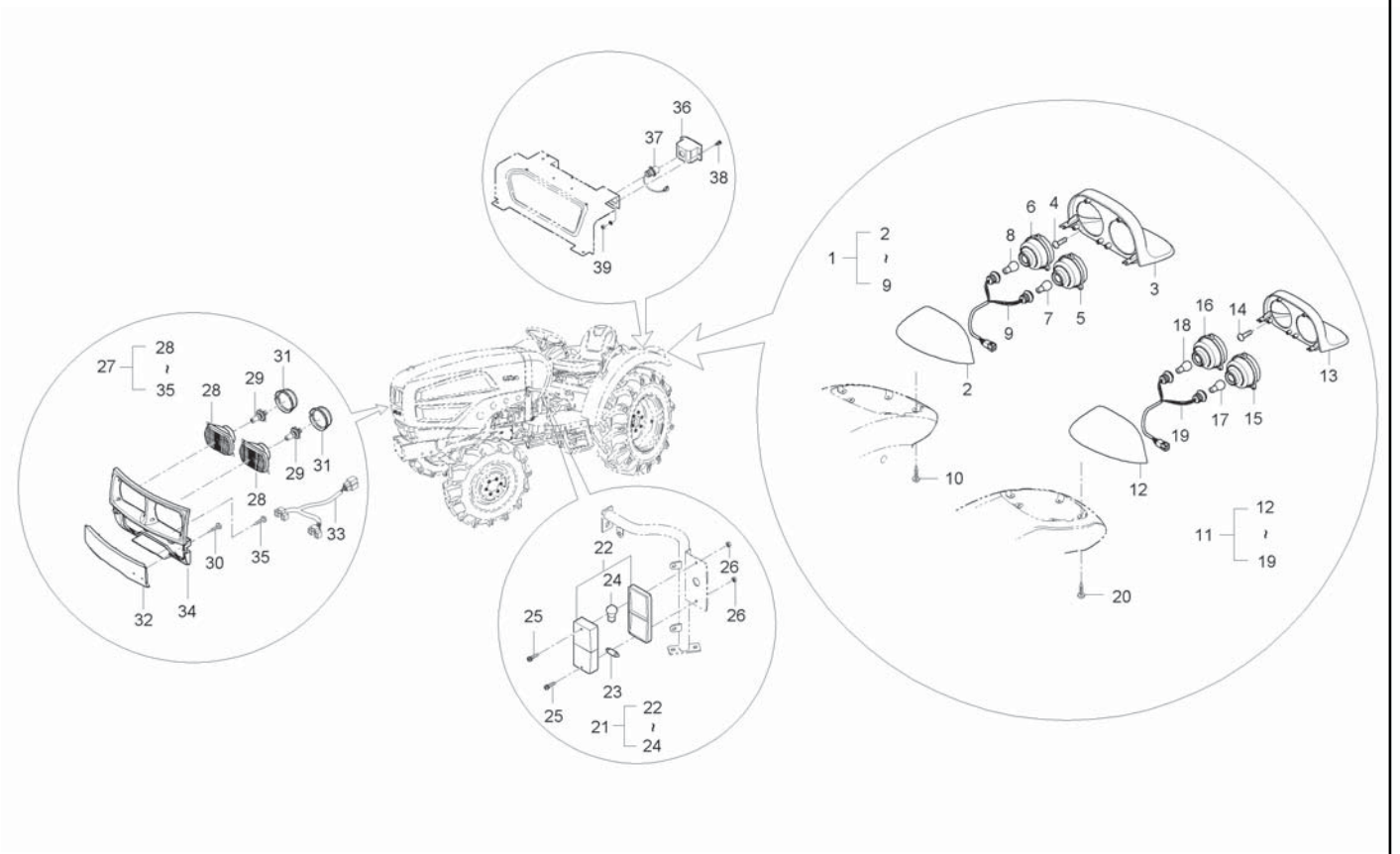

A : CK35-EU , B : CK35H-EU

No.	Part Number	Desciption	Q'TY A	Q'TY B	Q'TY C	Q'TY D	Q'TY E	I.C	Remark
31	T2611-69541	COVER, DUST	2	2					
32	T2185-51194	NET, 3	1	1					
33	T2185-69532	HARNESS WIRE, HEADLIGHT	1	1					
34	T2181-69701	GRILL	1	1					
35	38430-1827-1	SCREW	8	8					
35	T2185-64301	SCREW	8	8				<----	
36	T2611-75712	LICENSE PLATE LAMP ASSY	1	1					
37	T2611-79021	BULB,LIGHT(27W)	1	1					
38	03024-50412	SCREW, WASHER	2	2					
39	02054-50040	NUT	2	2					M4*P0.7
39	02761-50040	NUT, FLANGE	2	2				<--->	

----> Old replace New
<-X-> Not interchangeable
<-O-> Interchangeable with another part(s)
<---- New replace Old
<---> Interchangeable

CT230-T1050A

WORKING LIGHT GROUP

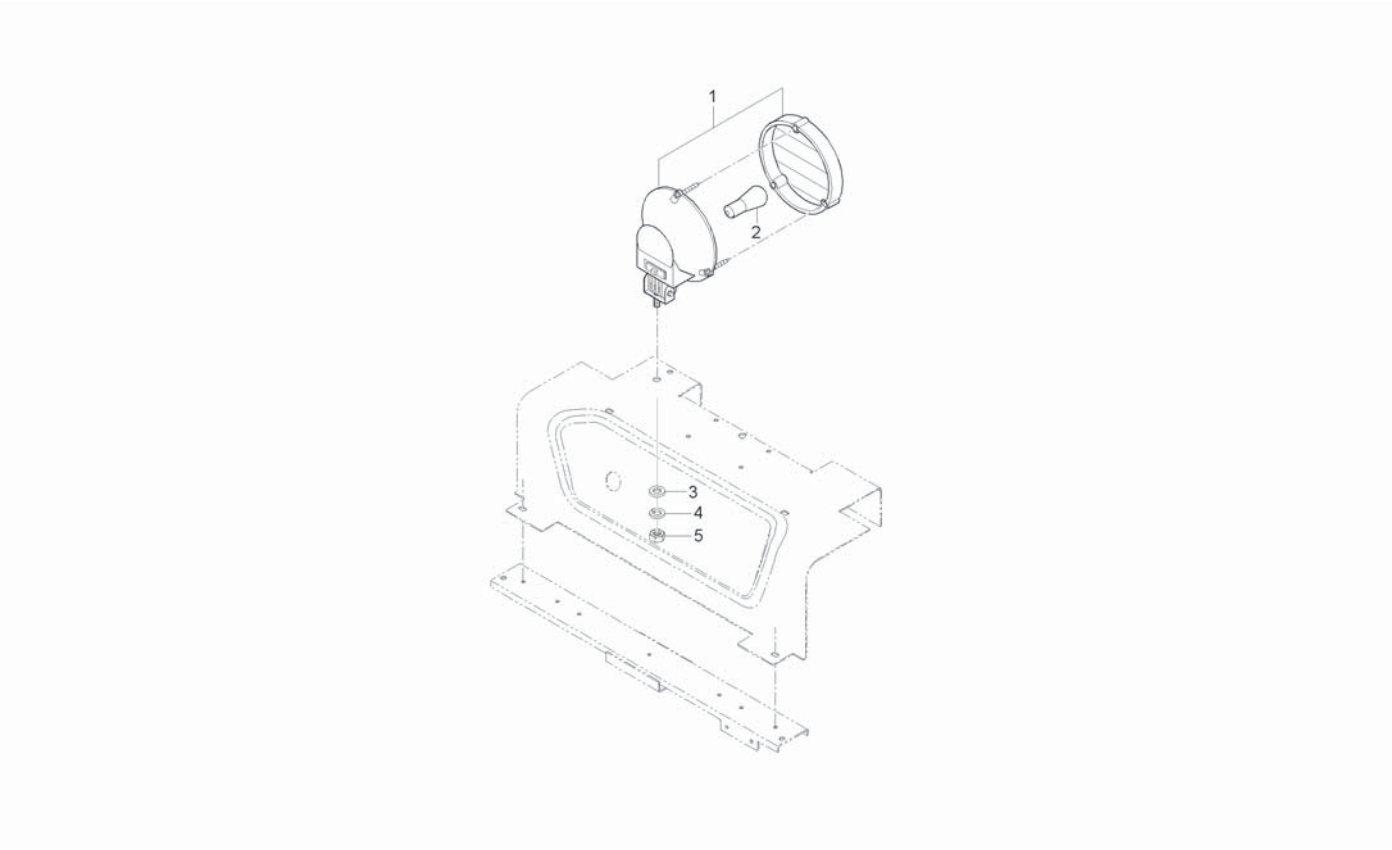

A : CK35-EU , B : CK35H-EU

No.	Part Number	Desciption	Q'TY A	Q'TY B	Q'TY C	Q'TY D	Q'TY E	I.C	Remark
1	T2350-46611	WORKING LIGHT ASSY	1	1					
2	T4620-69272	BULB, 12VX21W	1	1					
3	04013-50080	WASHER	1	1					M8
4	04512-50080	SPRING WASHER	1	1					M08
5	02156-50080	NUT	1	1					M8XP1.25

----> Old replace New
<-X-> Not interchangeable
<-O-> Interchangeable with another part(s)
<---- New replace Old
<---> Interchangeable

CK30C-T9000A

CABIN GROUP

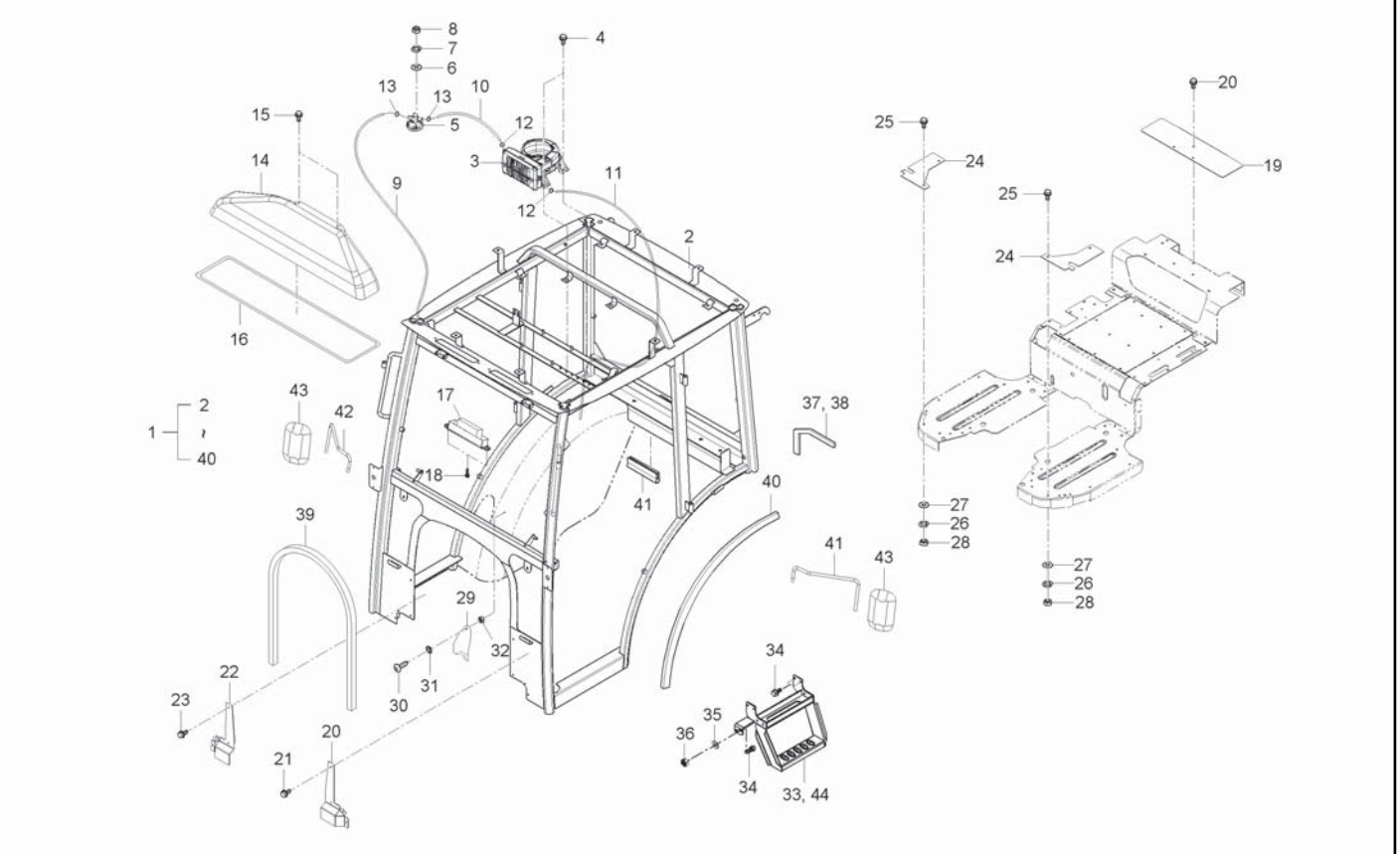

A : CK35-EU , B : CK35H-EU

No.	Part Number	Desciption	Q'TY A	B	C	D	E	I.C	Remark
1	T2135-80011	CABIN ASSY	1						
2	T2131-80021	CABIN FRAME ASSY	1						
3	T2131-86401	ASSY HEATER	1						
4	02751-50080	FLANGE NUT	4						
5	T2131-86501	CONTROLLER, HEATER	1						
6	04013-50040	WASHER, PLAIN	3						
7	04512-50040	WASHER, SPRING	3						
8	02054-50040	NUT	3						
9	T2131-87021	HOSE A, HEATER	1						
10	T2131-87031	HEATER HOSE B	1						
11	T2131-87041	HOSE C, HEATER	1						
12	T4340-38241	BAND, HOSE	4						
13	T4340-38241	BAND, HOSE	2						
14	T2131-82211	DUCT	1						
15	84612-1823-0	TAPPING SCREW	2						
16	T2131-82221	RUBBER, DUCT SEAING	1						
17	T4145-82052	COVER FILL	2						
18	T4625-55441	BOLT, FLANGE	4						
19	T2131-84171	BLOCKING PLATE, RR	1						

----> Old replace New
<-X-> Not interchangeable
<-O-> Interchangeable with another part(s)
<---- New replace Old
<---> Interchangeable

CK30C-T9000A

CABIN GROUP

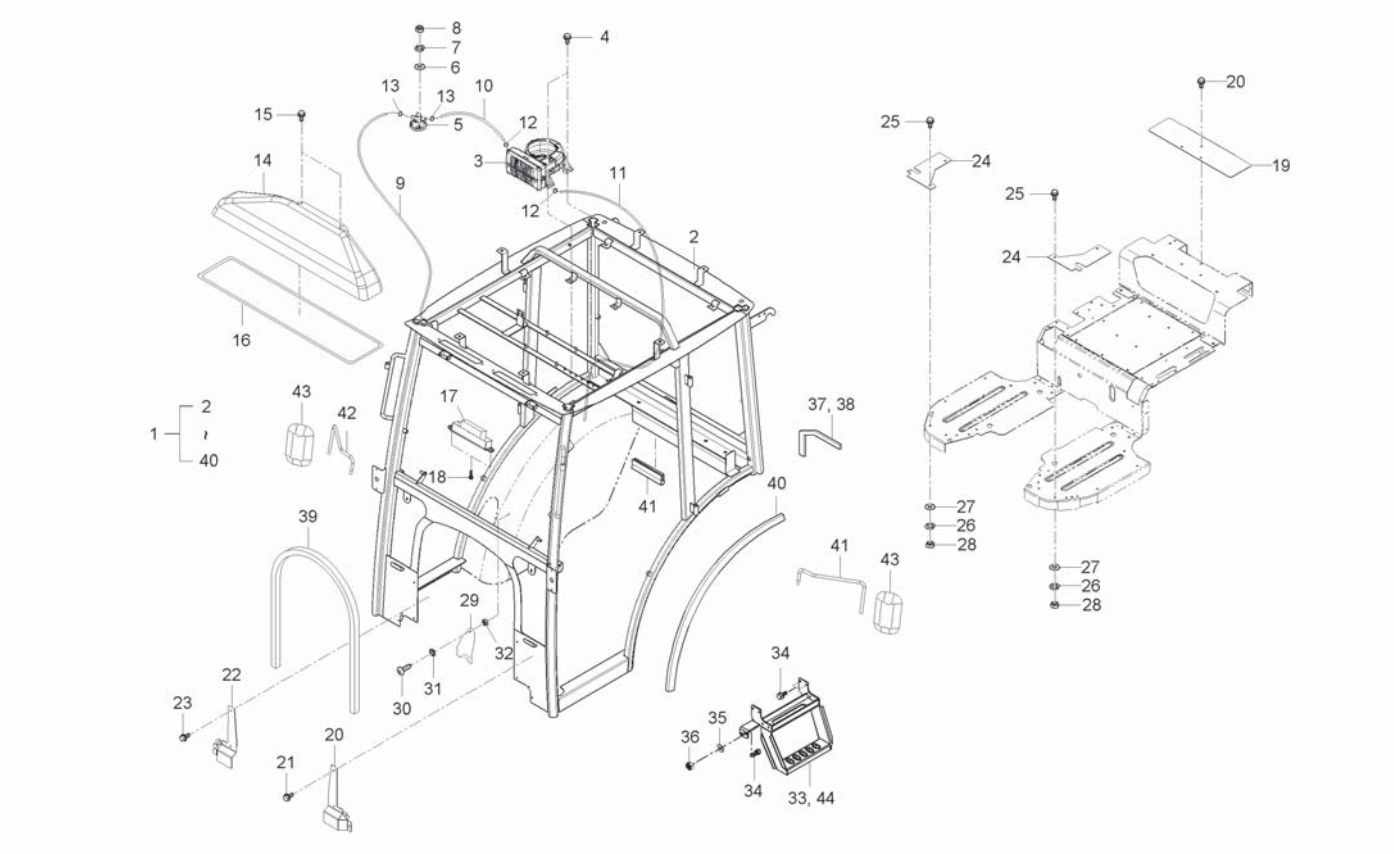

A : CK35-EU , B : CK35H-EU

No.	Part Number	Desciption	Q'TY A	B	C	D	E	I.C	Remark
20	T2131-84511	BLOCKING PLATE, FR LH	1						
21	01754-50612	BOLT, FLANGE	4						
22	T2131-84521	BLOCKING PLATE, FR RH	1						
23	01754-50612	BOLT, FLANGE	4						
24	T2131-84141	BLOCKING PLATE, FLOOR	2						
25	01754-50616	BOLT, FLANGE	6						
26	04512-50080	SPRING WASHER	6						
27	04013-50080	WASHER	6						
28	02114-50080	NUT	6						
29	T2131-84151	BLOCKING PLATE, CUP HOLDER	1						
30	03054-50420	SCREW	3						
31	04013-50040	WASHER, PLAIN	3						
32	02054-50040	NUT	3						
33	T2131-84161	ASSY, STEP FRAME EXTENSION PLATE LH	2						
34	01754-50825	BOLT, FLANGE	12						
35	04013-50080	WASHER	4						
36	41011-5151-4	U-NUT	4						
37	T2131-85111	ASSY, ENTRANCE DOOR GLASS RH	2						
38	T2131-85121	GLASS DOOR, RH	2						

----> Old replace New
<-X-> Not interchangeable
<-O-> Interchangeable with another part(s)
<---- New replace Old
<---> Interchangeable

CK30C-T9000A

CABIN GROUP

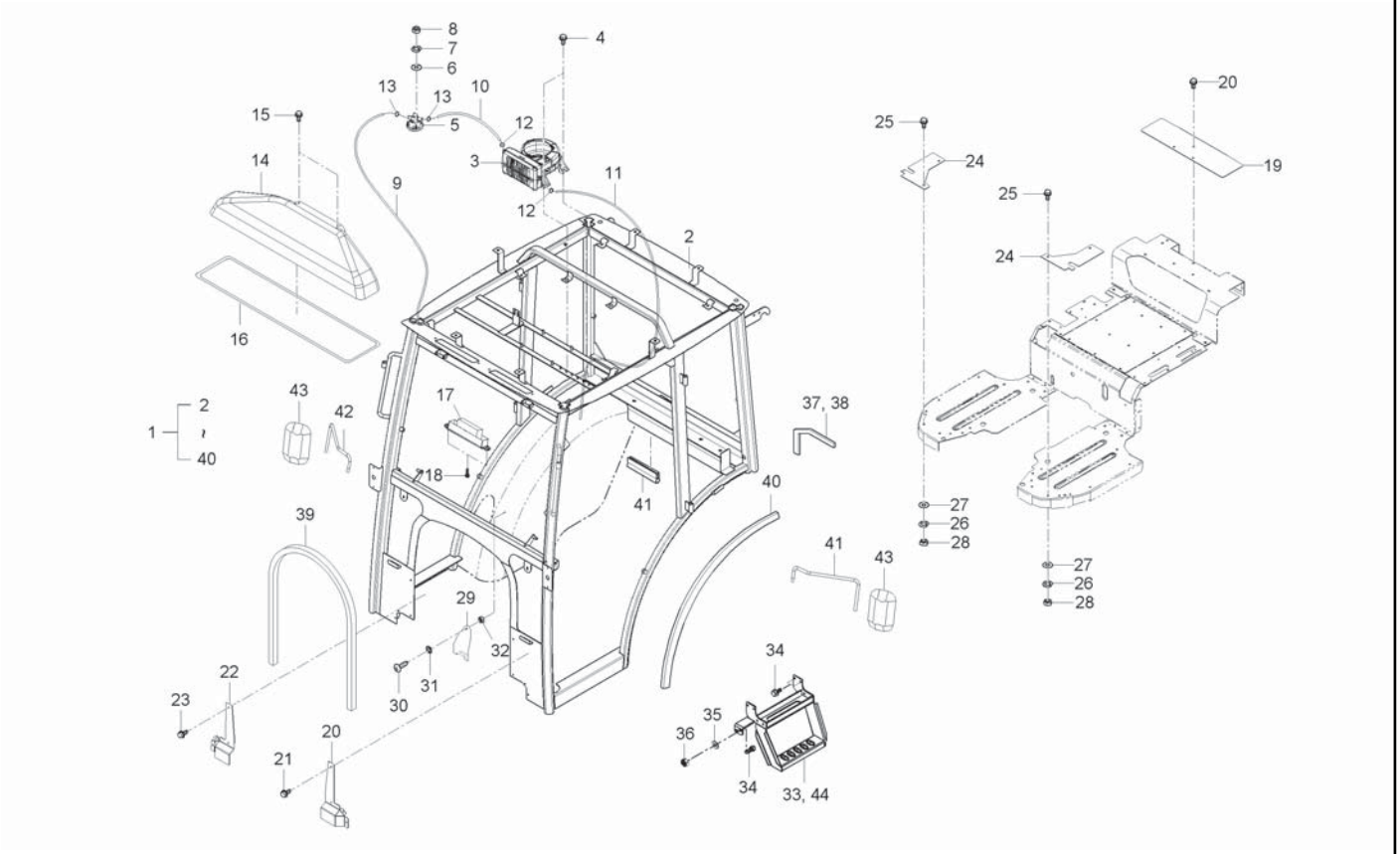

A : CK35-EU , B : CK35H-EU

No.	Part Number	Desciption	Q'TY A	B	C	D	E	I.C	Remark
39	T2131-85131	RUBBER, GLASS DOOR	1						
40	T2131-85141	SEALING PAD, REAR BLOCKING PLATE	1						
41	T2131-83011	SUPPROT, REARVIEW MIRROR LH	1						
42	T2131-83021	SUPPROT, REARVIEW MIRROR RH	1						
43	T4818-83001	REARVIEW MIRROR	2						
44	T2131-84551	EXTENSION PLATE ASSY, STEP FRAME RH	1						

----> Old replace New
<-X-> Not interchangeable
<-O-> Interchangeable with another part(s)
<---- New replace Old
<---> Interchangeable

CK30C-T9001A

CABIN GROUP

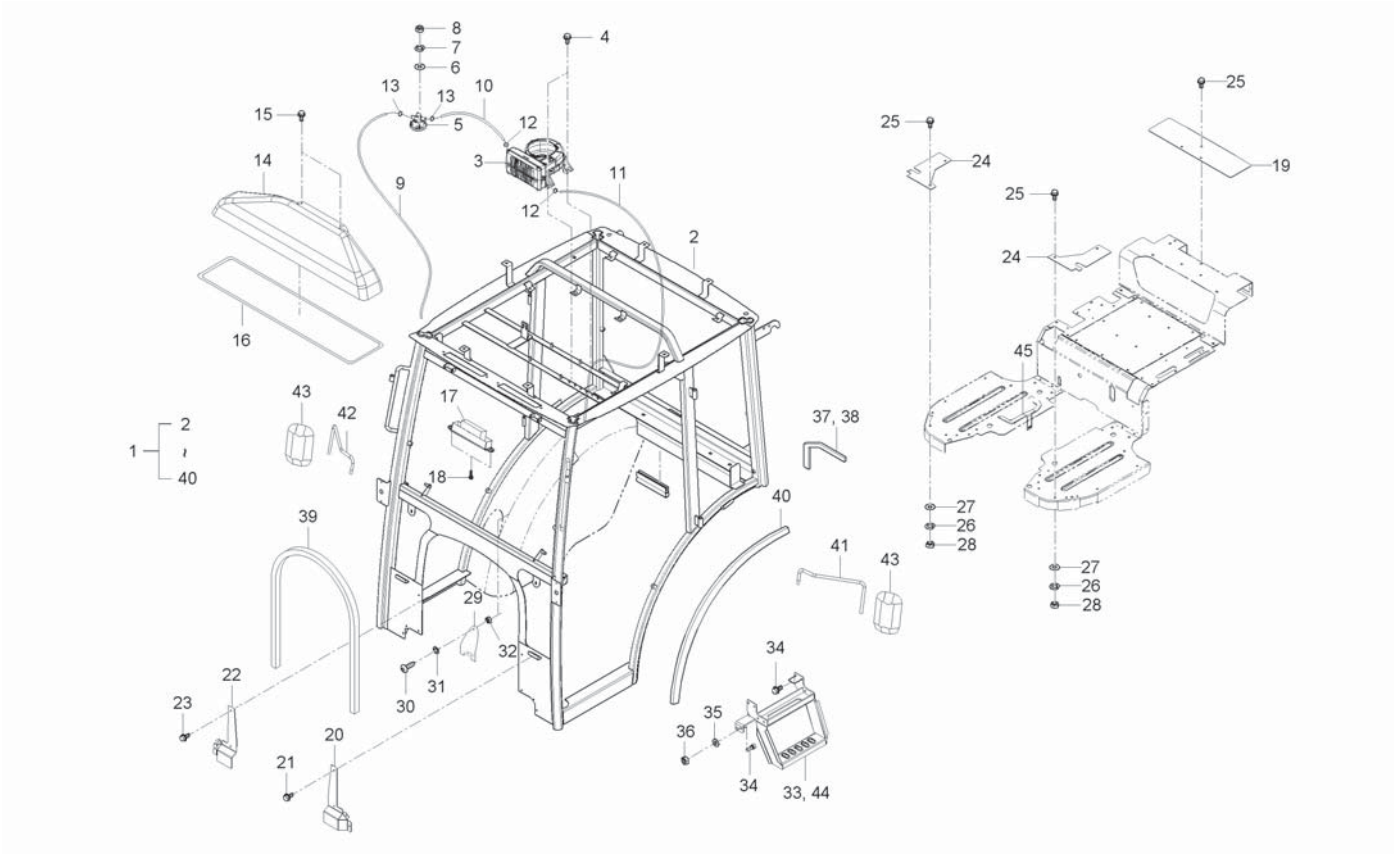

A : CK35-EU , B : CK35H-EU

No.	Part Number	Desciption	Q'TY A	Q'TY B	Q'TY C	Q'TY D	Q'TY E	I.C	Remark
1	T2136-80011	CABIN ASSY		1					
2	T2131-80021	CABIN FRAME ASSY		1					
3	T2131-86401	ASSY HEATER		1					
4	02751-50080	FLANGE NUT		4					M8X1.25
5	T2131-86501	CONTROLLER, HEATER		1					
6	04013-50040	WASHER, PLAIN		3					M4
7	04512-50040	WASHER, SPRING		3					M4
8	02054-50040	NUT		3					M4*P0.7
9	T2131-87021	HOSE A, HEATER		1					
10	T2131-87031	HEATER HOSE B		1					
11	T2131-87041	HOSE C, HEATER		1					
12	T4340-38241	BAND, HOSE		4					
13	T4340-38241	BAND, HOSE		2					
14	T2131-82211	DUCT		1					
15	84612-1823-0	TAPPING SCREW		2					
16	T2131-82221	RUBBER, DUCT SEAING		1					
17	T4145-82052	COVER FILL		2					
18	T4625-55441	BOLT, FLANGE		4					
19	T2131-84171	BLOCKING PLATE, RR		1					

----> Old replace New
<-X-> Not interchangeable
<-O-> Interchangeable with another part(s)
<---- New replace Old
<---> Interchangeable

CK30C-T9001A

CABIN GROUP

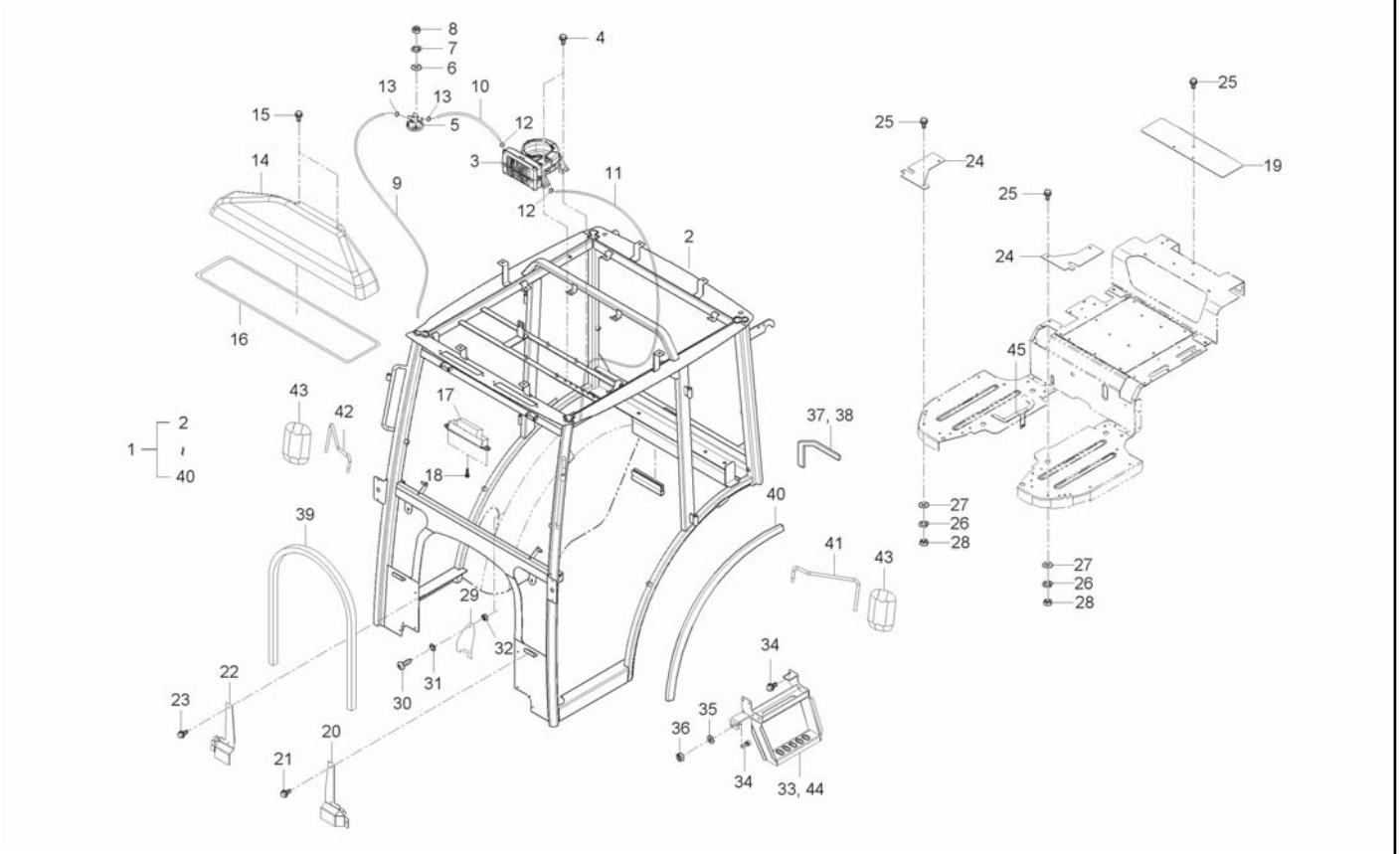

A : CK35-EU , B : CK35H-EU

No.	Part Number	Desciption	Q'TY A	Q'TY B	Q'TY C	Q'TY D	Q'TY E	I.C	Remark
20	T2131-84511	BLOCKING PLATE, FR LH		1					
21	01754-50612	BOLT, FLANGE		4					M6*1.0
22	T2131-84521	BLOCKING PLATE, FR RH		1					
23	01754-50612	BOLT, FLANGE		4					M6*1.0
24	T2131-84141	BLOCKING PLATE, FLOOR		2					
25	01754-50616	BOLT, FLANGE		6					M6*P1.0
26	04512-50080	SPRING WASHER		6					M08
27	04013-50080	WASHER		6					M8
28	02114-50080	NUT		6					M8*P1.25
29	T2131-84151	BLOCKING PLATE, CUP HOLDER		1					
30	03054-50420	SCREW		3					
31	04013-50040	WASHER, PLAIN		3					M4
32	02054-50040	NUT		3					M4*P0.7
33	T2131-84161	ASSY, STEP FRAME EXTENSION PLATE LH		2					
34	01754-50825	BOLT, FLANGE		4					
35	04013-50080	WASHER		2					M8
36	41011-5151-4	U-NUT		4					
37	T2131-84561	SEALING PAD1, FENDER		1					
38	T2131-84571	SEALING PAD2, FENDER		1					

----> Old replace New
<-X-> Not interchangeable
<-O-> Interchangeable with another part(s)
<---- New replace Old
<---> Interchangeable

CK30C-T9001A

CABIN GROUP

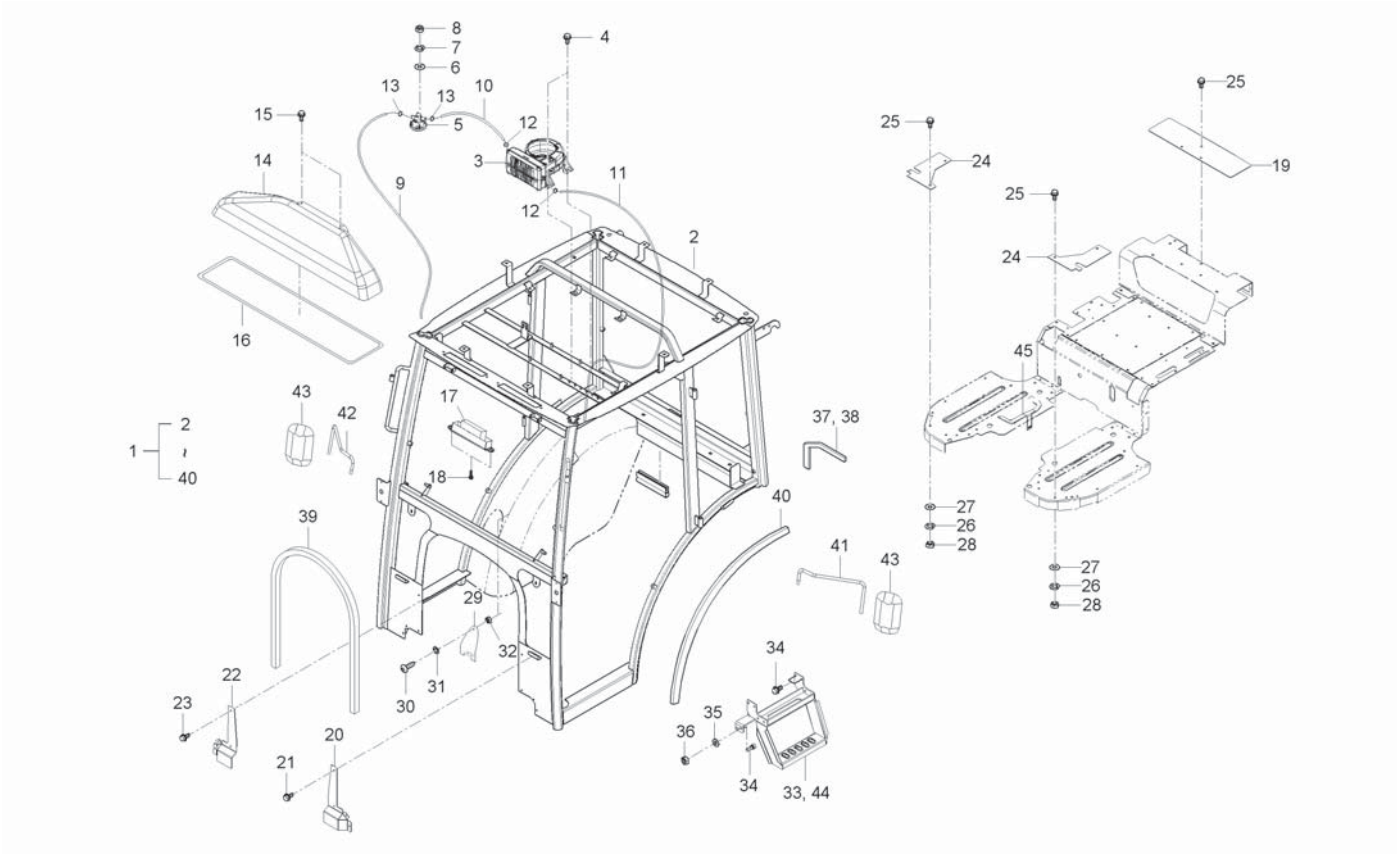

A : CK35-EU , B : CK35H-EU

No.	Part Number	Desciption	Q'TY A	Q'TY B	Q'TY C	Q'TY D	Q'TY E	I.C	Remark
39	T2131-84581	SEALING PAD, FRONT BLOCKING PLATE		1					
40	T2131-85141	SEALING PAD, REAR BLOCKING PLATE		1					
41	T2131-83011	SUPPROT, REARVIEW MIRROR LH		1					
42	T2131-83021	SUPPROT, REARVIEW MIRROR RH		1					
43	T4818-83001	REARVIEW MIRROR		1					
44	T2131-84551	EXTENSION PLATE ASSY, STEP FRAME RH		1					
45	T2132-31111	PADAL,HST		1					

----> Old replace New
<-X-> Not interchangeable
<-O-> Interchangeable with another part(s)
<---- New replace Old
<---> Interchangeable

CK30C-T9010A

MOUNTING GROUP

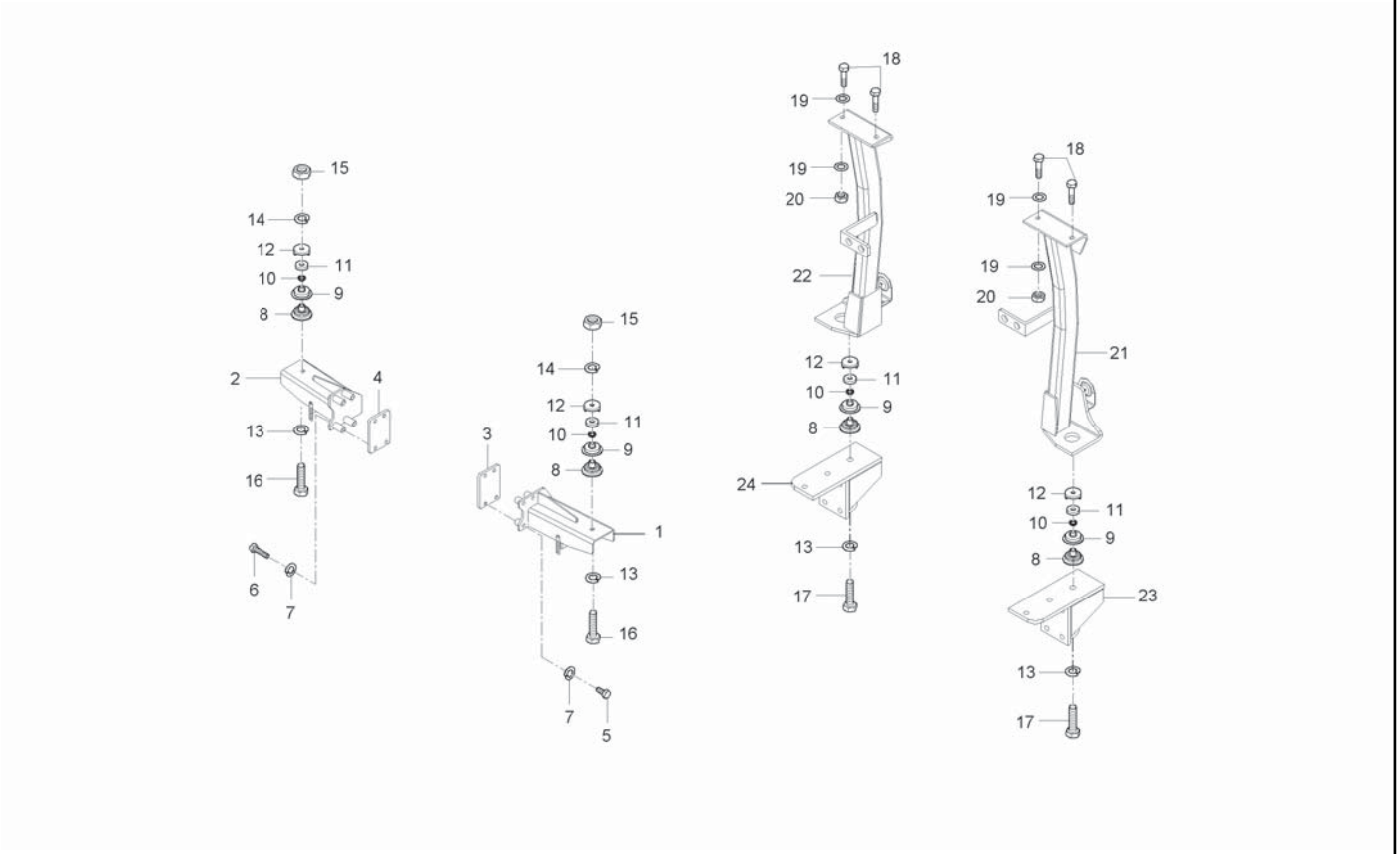

A : CK35-EU , B : CK35H-EU

No.	Part Number	Desciption	Q'TY A	Q'TY B	Q'TY C	Q'TY D	Q'TY E	I.C	Remark
1	T2131-33121	FRAME ASSY, FRONT MOUNTING LH	1	1					
2	T2131-33131	FRAME ASSY, FRONT MOUNTING RH	1	1					
3	T2131-33161	COLLAR, FRONT MOUNTING LH	1	1					
4	T2131-33171	COLLAR, FRONT MOUNTING RH	1	1					
5	01173-51470	BOLT	4	4					M14*P1.5
6	01173-51490	BOLT	4	4					M14*P1.5
7	04512-50140	WASHER, SPRING	8	8					
8	T4682-87812	RUBBER 1, DUSTPROOF	4	4					
9	T4682-87821	COVER, DUSTPROOF RUBBER	4	4					
10	T4682-87831	COLLAR, RUBBBER	4	4					
11	T4682-87841	RUBBER 2, DUSTPROOF	4	4					
12	T4920-87851	COLLAR	4	4					
13	04512-50160	WASHER, SPRING	4	4					M16
14	04013-50160	WASHER, PLAIN	4	4					M16
15	02176-50160	NUT	4	4					M16*P1.5
16	01173-51690	BOLT	2	2					
17	01173-51600	BOLT	2	2					
18	01123-51230	BOLT, WASHER	4	4					
19	04013-50120	WASHER, PLAIN	8	8					M12

----> Old replace New
<-X-> Not interchangeable
<-O-> Interchangeable with another part(s)
<---- New replace Old
<---> Interchangeable

CK30C-T9010A

MOUNTING GROUP

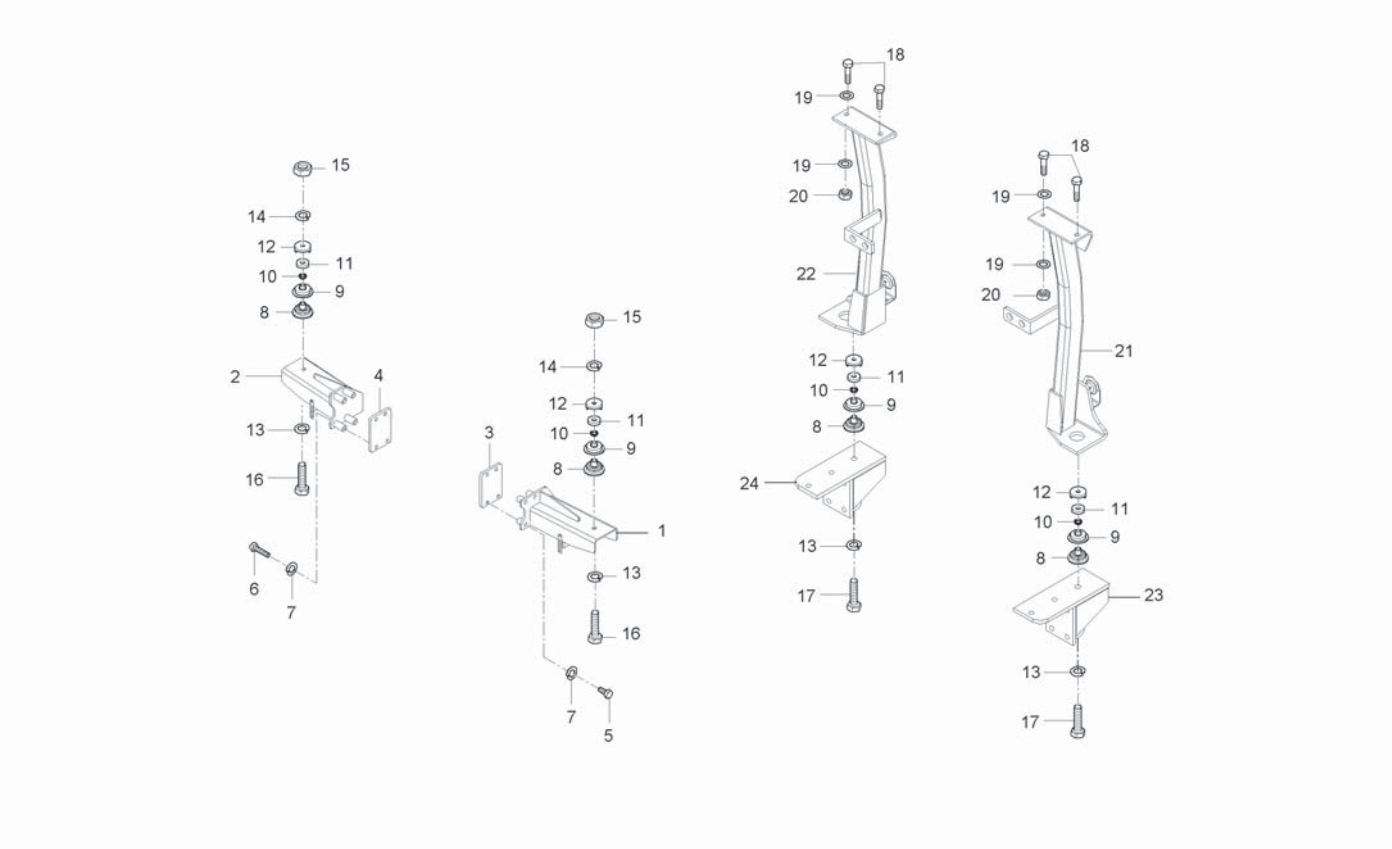

A : CK35-EU , B : CK35H-EU

No.	Part Number	Desciption	Q'TY A	Q'TY B	Q'TY C	Q'TY D	Q'TY E	I.C	Remark
20	02176-50120	NUT	4	4					M12*1.25
21	T2131-70031	FRAME ASSY, REAR MOUNTING LH	1	1					
22	T2131-70041	FRAME ASSY, REAR MOUNTING RH	1	1					
23	T2131-70051	BASE, REAR MOUNTING LH	1	1					
24	T2131-70061	BASE, REAR MOUNTING RH	1	1					

----> Old replace New
<-X-> Not interchangeable
<-O-> Interchangeable with another part(s)
<---- New replace Old
<---> Interchangeable

CK30C-T9020A

FRONT GLASS GROUP

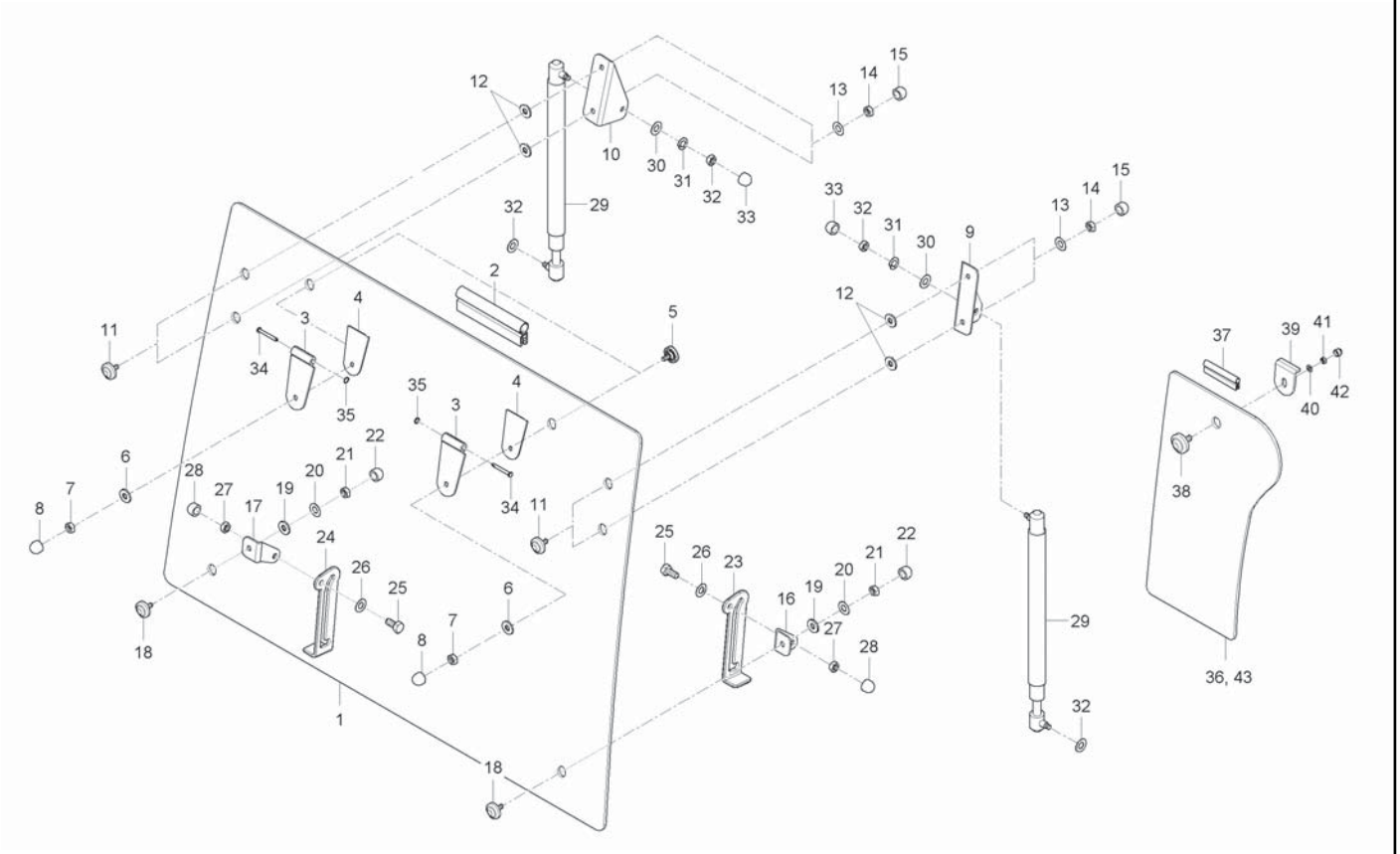

A : CK35-EU , B : CK35H-EU

No.	Part Number	Desciption	Q'TY A	Q'TY B	Q'TY C	Q'TY D	Q'TY E	I.C	Remark
1	T2131-82111	GLASS, FR UP	1	1					
2	T2131-82121	ROBBER,FRONT GLASS(UP)	1	1					
3	T4624-84511	HINGE	2	2					
4	T4681-90911	PACKING	2	2					
5	T4620-81842	BOLT, CUSHION	2	2					
6	04013-50080	WASHER	2	2					M8
7	02114-50080	NUT	2	2					M8*P1.25
8	T4815-93211	NUT	2	2					
9	T4681-85321	BRACKET, DOOR RR LH	1	1					
10	T4681-85331	BRACKET, DOOR RR RH	1	1					
11	T4620-81842	BOLT, CUSHION	4	4					
12	T4520-88401	PACKING	4	4					
13	04013-50080	WASHER	4	4					M8
14	02114-50080	NUT	4	4					M8*P1.25
15	T4815-93211	NUT	4	4					
16	T2131-82141	HOLDING BRACKET, FRONT GLASS LH	1	1					
17	T2131-82151	HOLDING BRACKET, FRONT GLASS RH	1	1					
18	T4620-81842	BOLT, CUSHION	2	2					
19	T4520-88401	PACKING	2	2					

----> Old replace New
<-X-> Not interchangeable
<-O-> Interchangeable with another part(s)
<---- New replace Old
<---> Interchangeable

CK30C-T9020A

FRONT GLASS GROUP

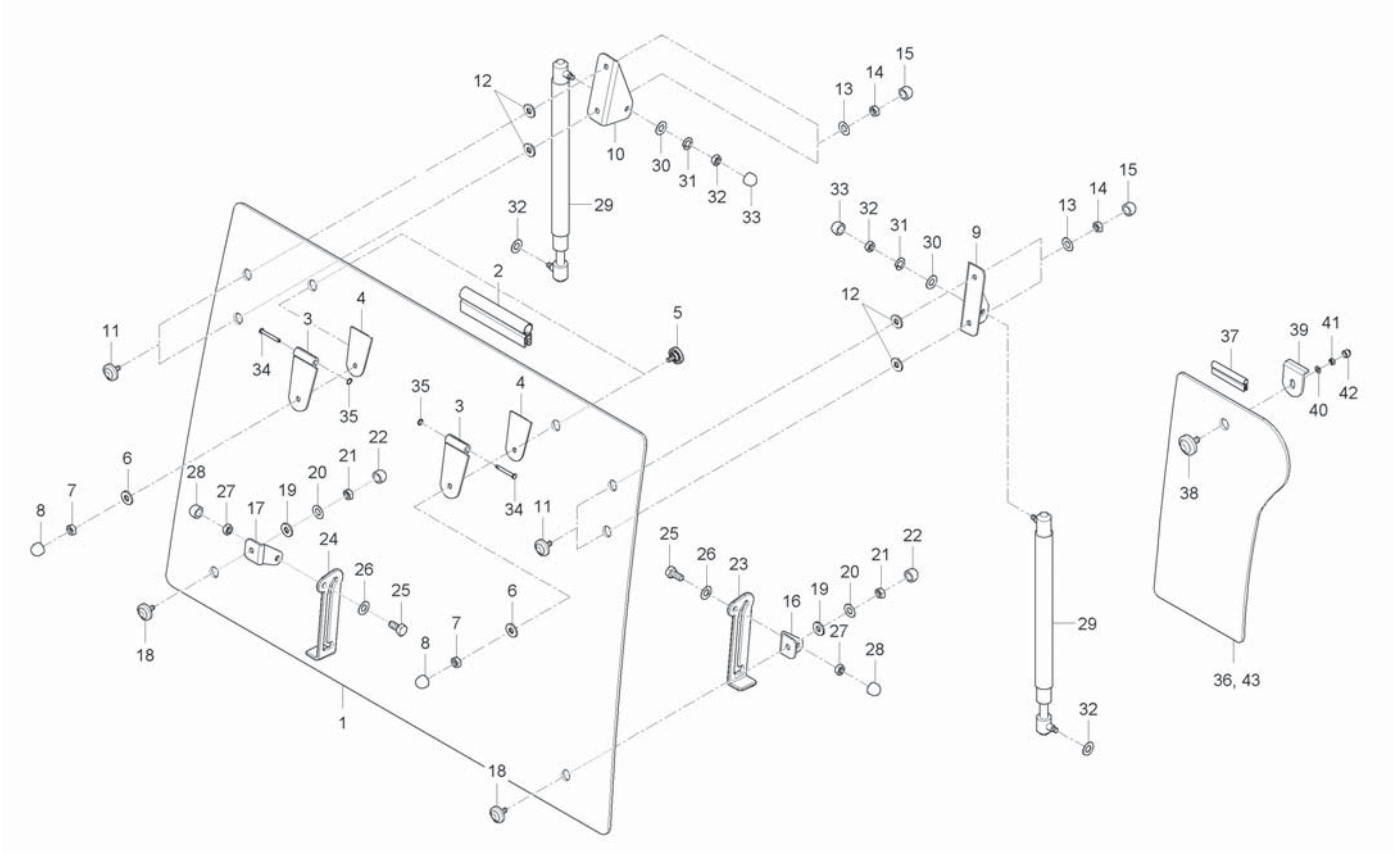

A : CK35-EU , B : CK35H-EU

No.	Part Number	Desciption	Q'TY A	Q'TY B	Q'TY C	Q'TY D	Q'TY E	I.C	Remark
20	04013-50080	WASHER	2	2					M8
21	02114-50080	NUT	2	2					M8*P1.25
22	T4815-93211	NUT	2	2					
23	T2131-82161	GRIP LH	1	1					
24	T2131-82171	GRIP RH	1	1					
25	01150-50820	BOLT	2	2					
26	04013-50080	WASHER	4	4					M8
27	41011-5151-4	U-NUT	2	2					
28	T4815-93211	NUT	4	4					
29	T4835-87621	AIR CYLINDER	2	2					
30	04013-50080	WASHER	2	2					M8
31	04512-50080	SPRING WASHER	2	2					M08
32	02114-50080	NUT	2	2					M8*P1.25
33	T4815-93211	NUT	2	2					
34	T4620-88051	PIN, HINGE	2	2					
35	04613-50060	SNAP RING	2	2					
36	T2131-83111	GLASS, FR LOW LH	1	1					
37	T2131-83121	RUBBER, FR LWR	2	2					
38	T4620-81842	BOLT, CUSHION	2	2					

----> Old replace New
<-X-> Not interchangeable
<-O-> Interchangeable with another part(s)
<---- New replace Old
<---> Interchangeable

CK30C-T9020A

FRONT GLASS GROUP

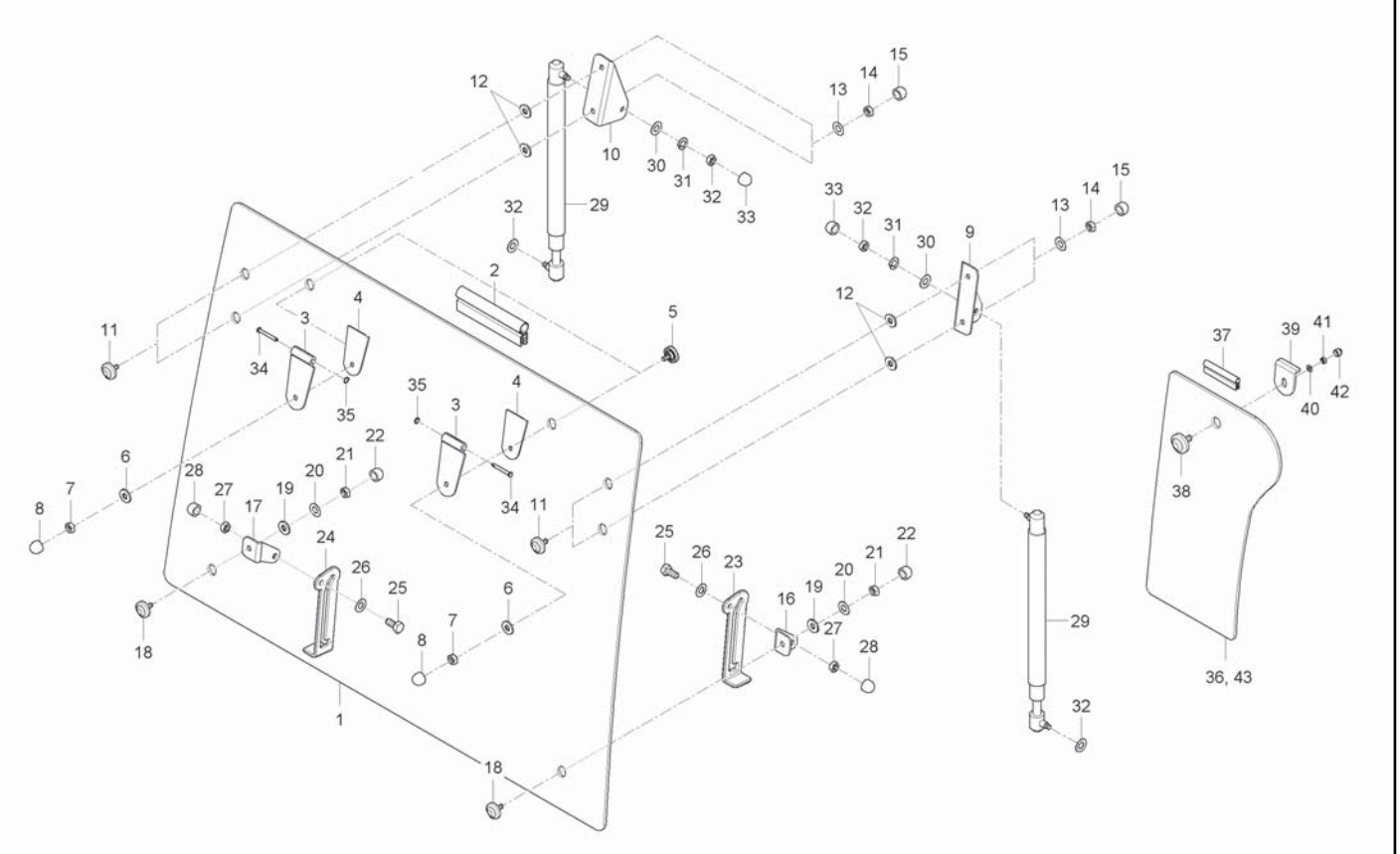

A : CK35-EU , B : CK35H-EU

No.	Part Number	Desciption	Q'TY A	Q'TY B	Q'TY C	Q'TY D	Q'TY E	I.C	Remark
39	T4520-88401	PACKING	2	2					
40	04013-50080	WASHER	2	2					M8
41	02114-50080	NUT	2	2					M8*P1.25
42	T4815-93211	NUT	2	2					
43	T2131-83211	GLASS, FR LWR RH	1	1					

----> Old replace New
<-X-> Not interchangeable
<-O-> Interchangeable with another part(s)
<---- New replace Old
<---> Interchangeable

CK30C-T9030A

DOOR GROUP

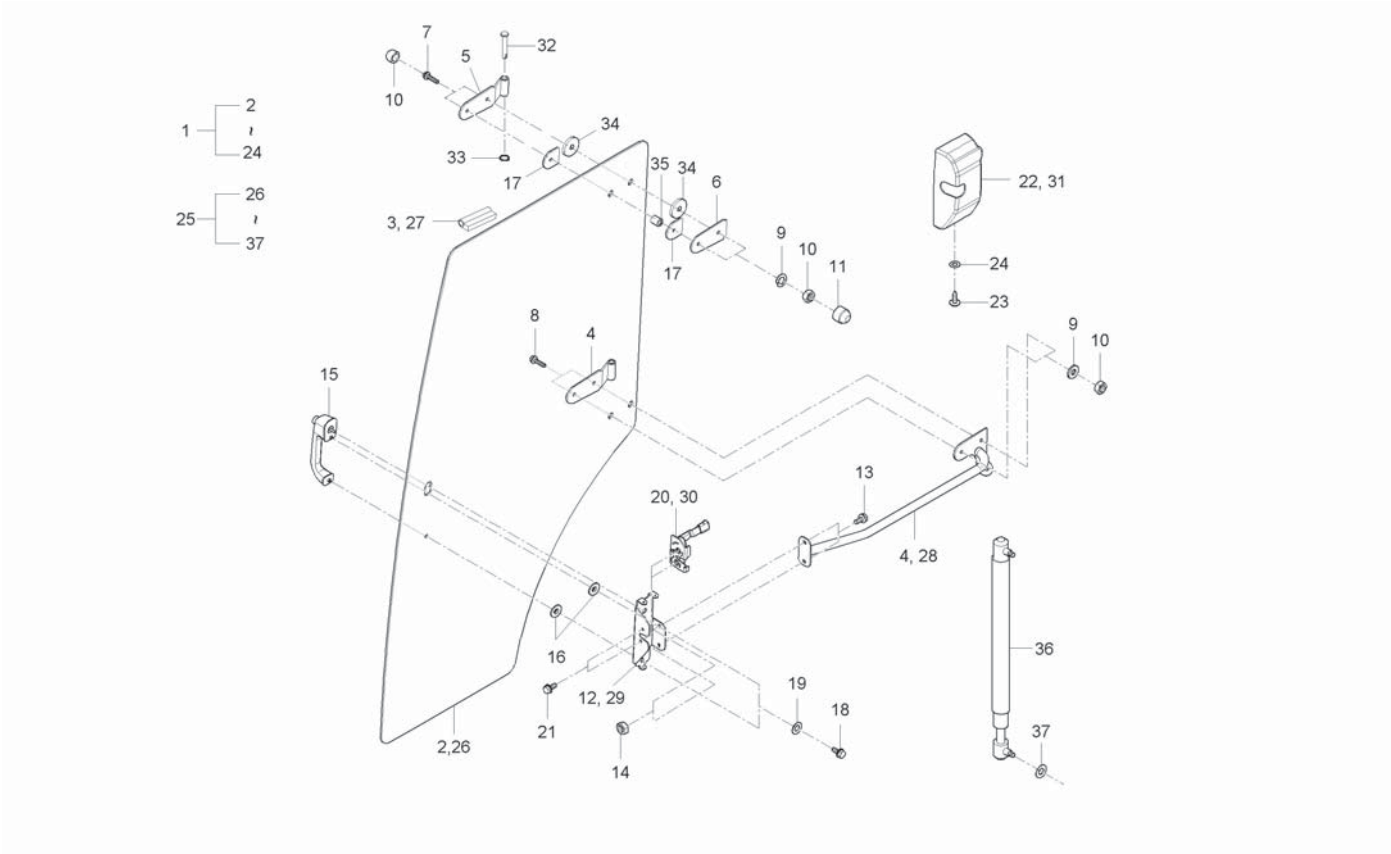

A : CK35-EU , B : CK35H-EU

No.	Part Number	Desciption	Q'TY A	Q'TY B	Q'TY C	Q'TY D	Q'TY E	I.C	Remark
1	T2131-84101	DOOR ASSY, LH	1	1					
2	T2131-84121	GLASS, DOOR LH	2	2					
3	T2131-84131	RUBBER, GLASS DOOR	2	2					
4	T2131-84211	FRAME ASSY, DOOR LH	1	1					
5	T2131-84251	HINGE, DOOR	4	4					
6	T2391-84241	PLATE, DOOR FRAME HOLDING	2	2					
7	01123-50830	BOLT, WASHER	8	8					M8P1.25*30
8	T4620-81842	BOLT, CUSHION	16	16					
9	04013-50080	WASHER	16	16					M8
10	02114-50080	NUT	8	8					M8*P1.25
11	T4815-93211	NUT	16	16					
12	T2131-83761	BRACKET, HANDLE LH	1	1					
13	01754-50620	BOLT, FLANGE	4	4					
14	02751-50060	FLANGE NUT	4	4					M6*P1.0
15	T2131-51031	HANDLE, DOOR	2	2					
16	T4520-88401	PACKING	4	4					
17	T4681-90911	PACKING	4	4					
18	01023-50625	BOLT, WASHER	4	4					
19	04013-50060	WASHER, PLAIN	4	4					M6

----> Old replace New
<-X-> Not interchangeable
<-O-> Interchangeable with another part(s)
<---- New replace Old
<---> Interchangeable

CK30C-T9030A

DOOR GROUP

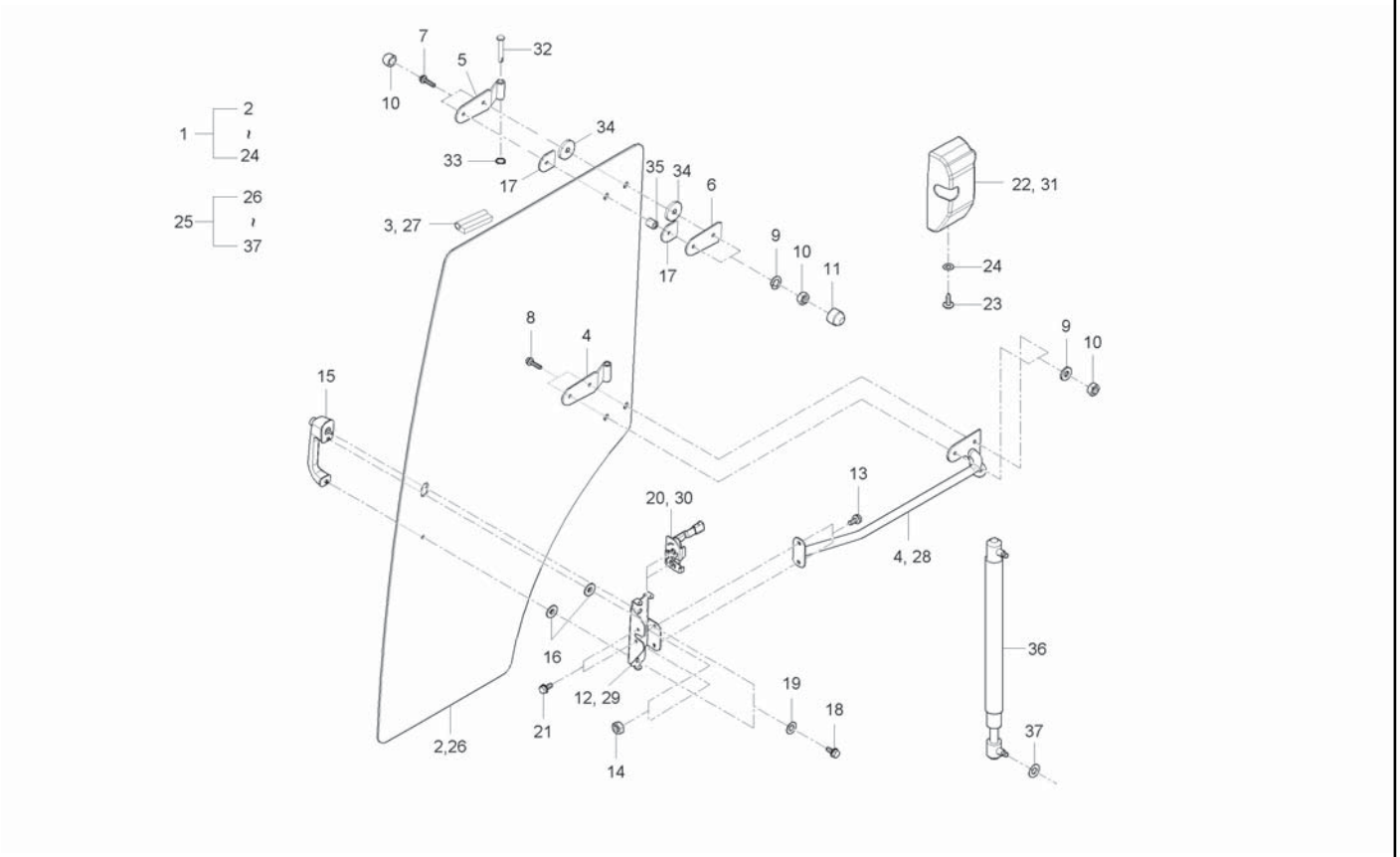

A : CK35-EU , B : CK35H-EU

No.	Part Number	Desciption	Q'TY A	Q'TY B	Q'TY C	Q'TY D	Q'TY E	I.C	Remark
20	T4930-51351	LATCH ASSY, LH	1	1					
21	01754-50825	BOLT, FLANGE	4	4					
22	T4930-81321	COVER, SIDE DOOR (LH)	1	1					
23	03054-50416	SCREW	2	2					M4*0.7
24	04013-50040	WASHER, PLAIN	2	2					M4
25	T2131-85101	DOOR ASSY, RH	1	1					
26	T2131-85121	GLASS DOOR, RH	1	1					
27	T2131-85131	RUBBER, GLASS DOOR	1	1					
28	T2131-85211	FRAME ASSY, DOOR RH	1	1					
29	T2131-83771	BRACKET, HANDLE RH	1	1					
30	T4930-51361	LATCH ASSY, RH	1	1					
31	T4930-81331	COVER, SIDE DOOR (RH)	1	1					
32	T4810-82741	PIN HINGE, ENTRANCE	4	4					
33	04613-50100	SNAP RING	4	4					
34	T4520-87402	PACKING, 1	8	8					
35	T4681-83431	SPACER, ROOF ASSY	8	8					
36	T2131-84731	GAS SPRING	2	2					
37	04013-50080	WASHER	2	2					M8

----> Old replace New
<-X-> Not interchangeable
<-O-> Interchangeable with another part(s)
<---- New replace Old
<---> Interchangeable

CK30C-T9040A

REAR GLASS GROUP

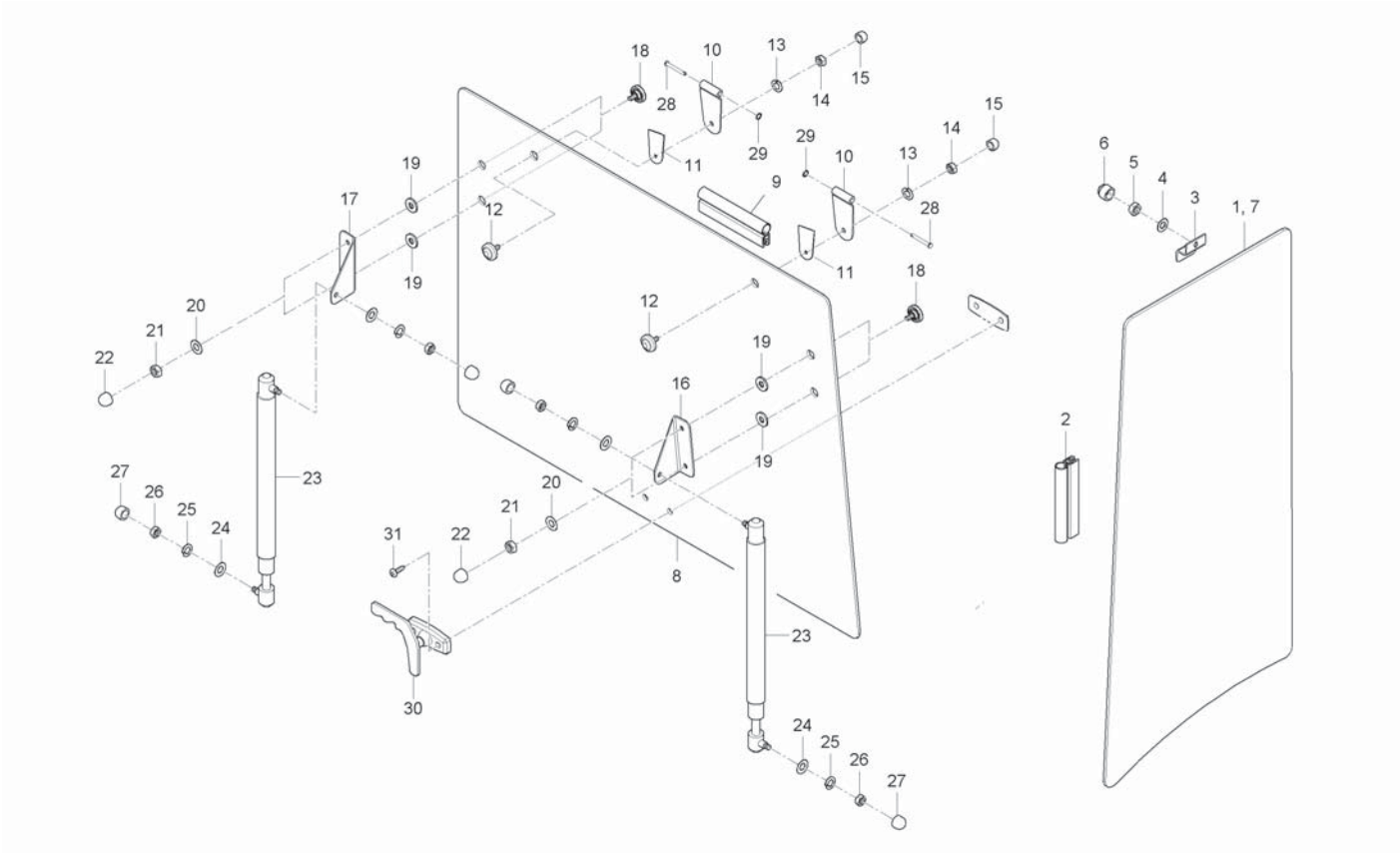

A : CK35-EU , B : CK35H-EU

No.	Part Number	Desciption	Q'TY A	Q'TY B	Q'TY C	Q'TY D	Q'TY E	I.C	Remark
1	T2131-86111	GLASS, OUTSIDE LH	1	1					
2	T2131-86121	RUBBER, GLASS	2	2					
3	T4681-85011	BRACKET, WINDOW A	2	2					
4	04013-50060	WASHER, PLAIN	2	2					M6
5	02114-50060	NUT	2	2					
6	T4680-93211	CAP NUT, M6	2	2					
7	T2131-87111	GLASS, OUTSIDE RH	1	1					
8	T2131-88111	GLASS, RR	1	1					
9	T2131-88121	ROBBER,FRONT GLASS(UP)	1	1					
10	T4624-84511	HINGE	2	2					
11	T4681-90911	PACKING	2	2					
12	T4620-81842	BOLT, CUSHION	2	2					
13	04013-50080	WASHER	2	2					M8
14	02114-50080	NUT	2	2					M8*P1.25
15	T4815-93211	NUT	2	2					
16	T4681-85321	BRACKET, DOOR RR LH	1	1					
17	T4681-85331	BRACKET, DOOR RR RH	1	1					
18	T4620-81842	BOLT, CUSHION	4	4					
19	T4520-88401	PACKING	4	4					

----> Old replace New
<-X-> Not interchangeable
<-O-> Interchangeable with another part(s)
<---- New replace Old
<---> Interchangeable

CK30C-T9040A

REAR GLASS GROUP

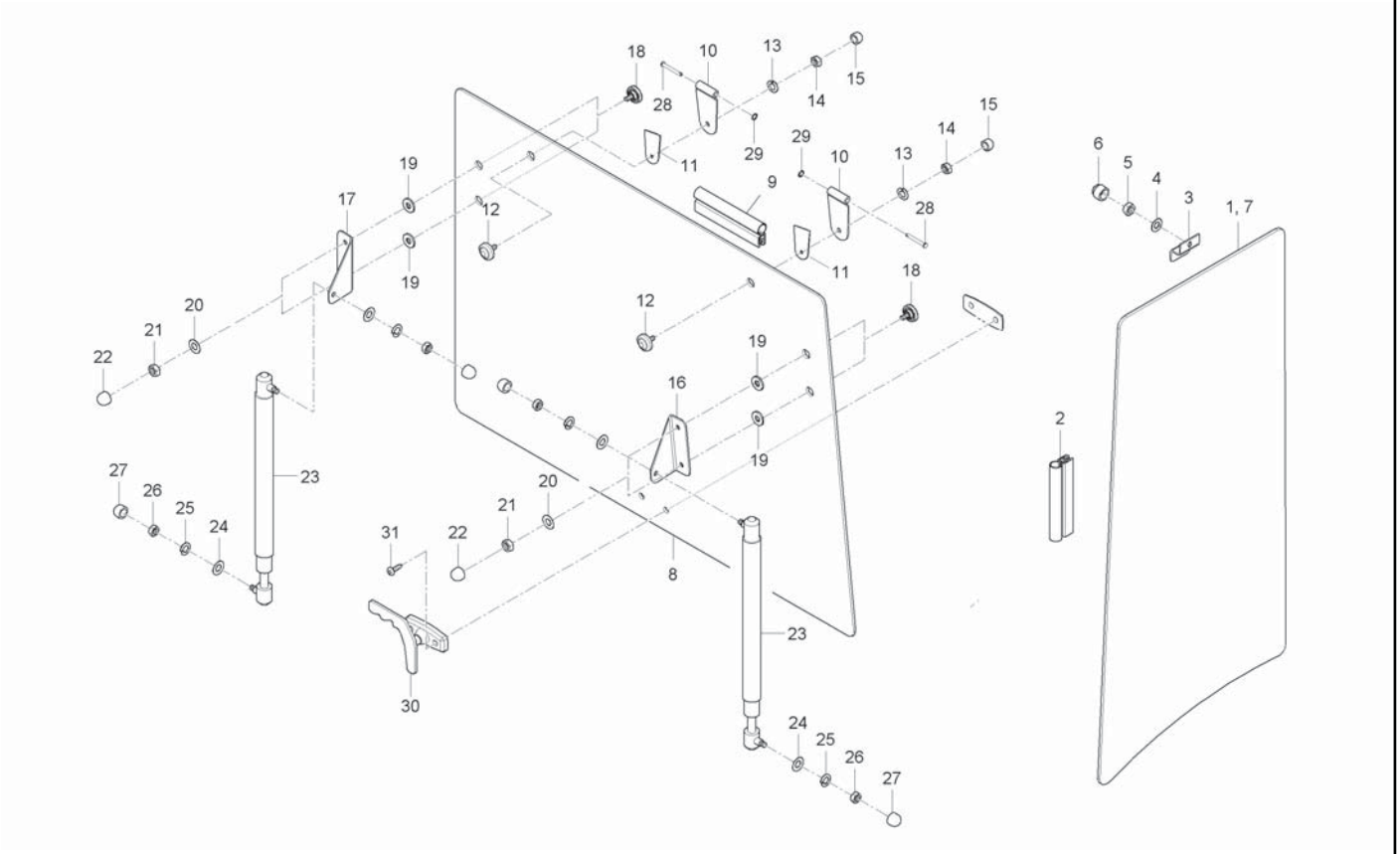

A : CK35-EU , B : CK35H-EU

No.	Part Number	Desciption	Q'TY A	Q'TY B	Q'TY C	Q'TY D	Q'TY E	I.C	Remark
20	04013-50080	WASHER	4	4					M8
21	02114-50080	NUT	4	4					M8*P1.25
22	T4815-93211	NUT	4	4					
23	T4835-87621	AIR CYLINDER	2	2					
24	04013-50080	WASHER	2	2					M8
25	04512-50080	SPRING WASHER	2	2					M08
26	02114-50080	NUT	2	2					M8*P1.25
27	T4815-93211	NUT	2	2					
28	05112-50855	PIN	2	2					
29	04613-50060	SNAP RING	2	2					
30	T2131-82161	GRIP LH	1	1					
31	03054-50614	BOLT,SCREW	2	2					

----> Old replace New
<-X-> Not interchangeable
<-O-> Interchangeable with another part(s)
<---- New replace Old
<---> Interchangeable

CK30C-T9050A

ROOF GROUP

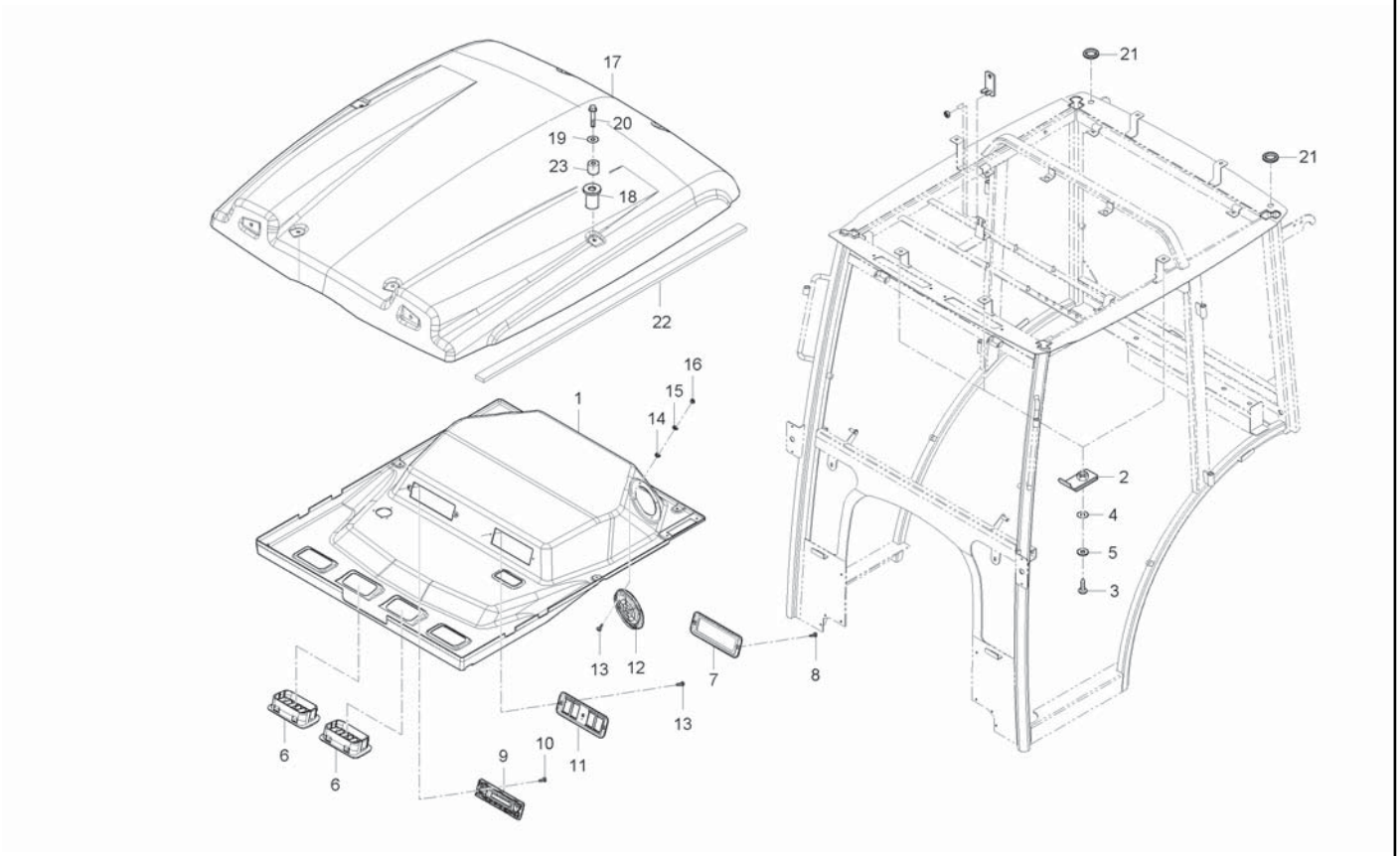

A : CK35-EU , B : CK35H-EU

No.	Part Number	Desciption	Q'TY A	Q'TY B	Q'TY C	Q'TY D	Q'TY E	I.C	Remark
1	T2131-82011	CEILING	1	1					
2	38245-2925-3	NUT,SPRING	6	6					
3	03014-50630	SCREW	6	6					M6*P1.0
4	04013-50060	WASHER, PLAIN	6	6					M6
5	T4145-82081	CAP, RUBBER	6	6					
6	T4930-83082	GRILL, AIRCON	4	4					
7	T4145-82072	COVER, STEREO	1	1					
8	03054-50416	SCREW	2	2					M4*0.7
9	T2131-82511	PANNEL, SWITCH	1	1					
10	T2131-82521	COVER	2	2					
11	03054-50416	SCREW	2	2					M4*0.7
12	T4810-82352	SPEKER GRILL	2	2					
13	03054-50420	SCREW	8	8					
14	04013-50040	WASHER, PLAIN	8	8					M4
15	04512-50040	WASHER, SPRING	8	8					M4
16	02054-50040	NUT	8	8					M4*P0.7
17	T2131-82001	ROOF	1	1					
18	T4833-87141	WASHER	6	6					
19	04013-50080	WASHER	6	6					M8

----> Old replace New
<-X-> Not interchangeable
<-O-> Interchangeable with another part(s)
<---- New replace Old
<---> Interchangeable

CK30C-T9050A

ROOF GROUP

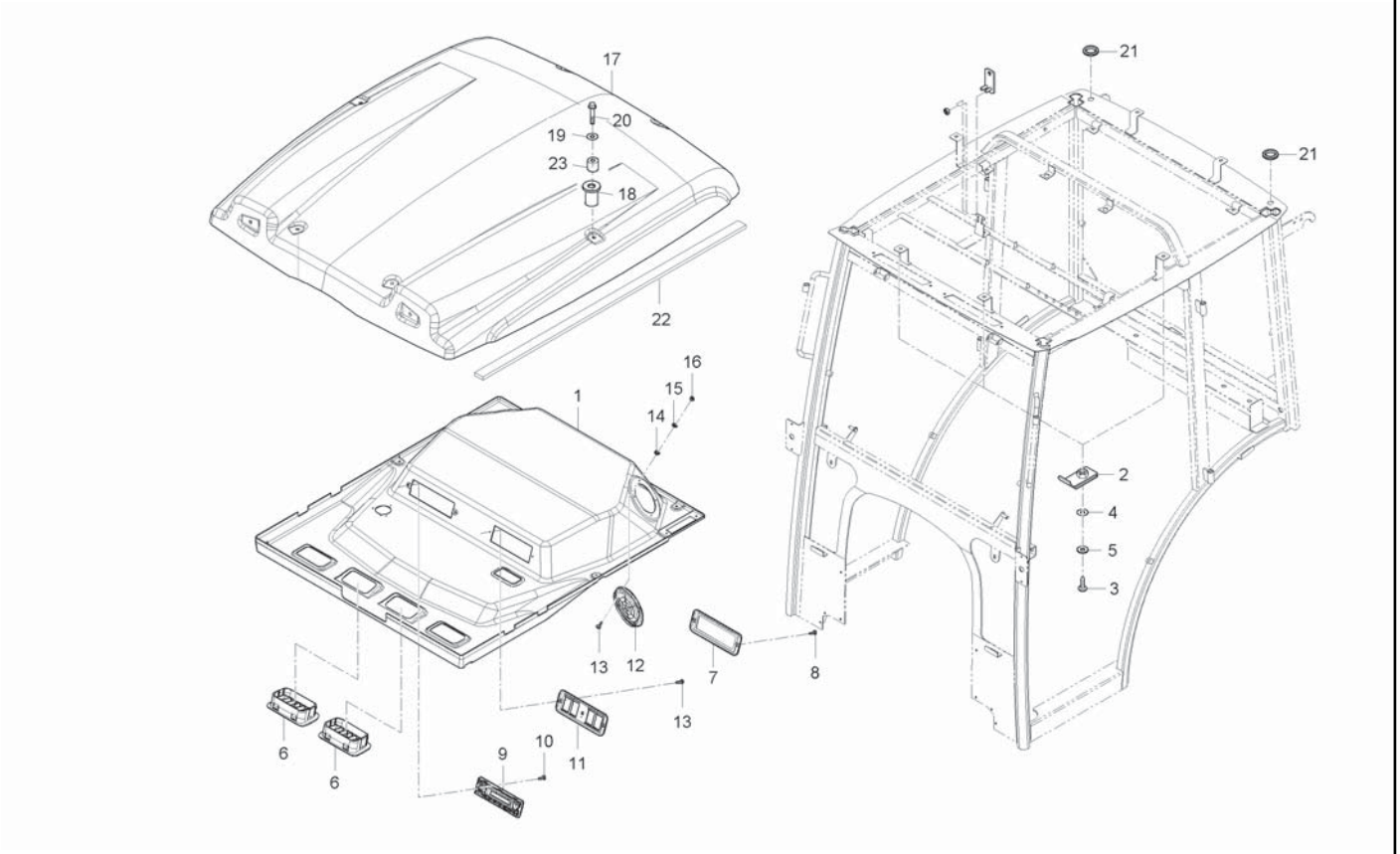

A : CK35-EU , B : CK35H-EU

No.	Part Number	Desciption	Q'TY A	Q'TY B	Q'TY C	Q'TY D	Q'TY E	I.C	Remark
20	01754-50830	BOLT, FLANGE	6	6					M8*P1.25
21	T4815-78111	GROMMET	2	2					
22	T2131-82421	RUBBER, ROOF SEAING	1	1					
23	T4681-83431	SPACER, ROOF ASSY	6	6					

----> Old replace New
<-X-> Not interchangeable
<-O-> Interchangeable with another part(s)
<---- New replace Old
<---> Interchangeable

CK30C-T9060A

ELETRICAL GROUP

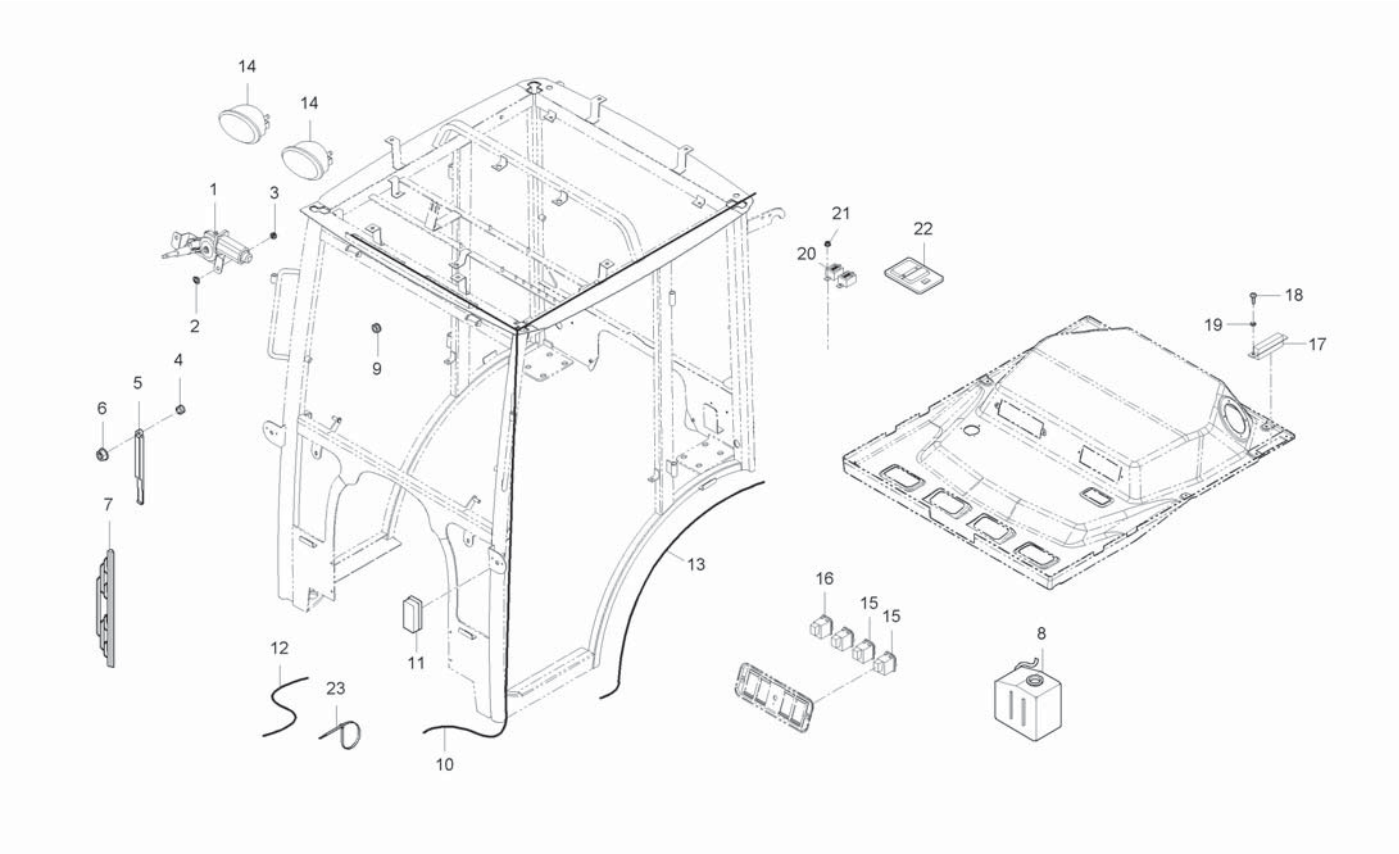

A : CK35-EU , B : CK35H-EU

No.	Part Number	Desciption	Q'TY A	Q'TY B	Q'TY C	Q'TY D	Q'TY E	I.C	Remark
1	T4930-69911	MOTOR, WIPER FR	1	1					
2	04013-50080	WASHER	2	2					M8
3	02751-50080	FLANGE NUT	2	2					M8X1.25
4	T4815-89171	GROMMET	1	1					
5	T4681-83711	ARM, WIPER	1	1					
6	02751-50080	FLANGE NUT	1	1					M8X1.25
7	T4815-88231	WIPER, 16-INCH	1	1					
8	T4340-87181	ASSY TANK	1	1					
9	T4624-84411	GROMMET	1	1					
10	T2131-69171	WIRE HARNESS, CABIN	1	1					
11	T2131-69071	LAMP FRONT COMBINATION	2	2					
12	T2131-69351	WIRE HARNESS, GENERATOR CONNECTION	1	1					
13	T2131-69341	WIRE HARNESS, TURN SIGNAL LAMP	2	2					
14	T2131-69801	ASSY LAMJP,WORKING	2	2					
15	T4520-54222	SWITCH, WORKING LAMP	2	2					
16	T4681-83611	SWITCH, HEATER	1	1					
17	T2131-69601	ASSY FUSE BOX	1	1					
18	03054-50420	SCREW	2	2					
19	04013-50100	WASHER, PLAIN	2	2					M10

----> Old replace New
<-X-> Not interchangeable
<-O-> Interchangeable with another part(s)
<---- New replace Old
<---> Interchangeable

CK30C-T9060A

ELETRICAL GROUP

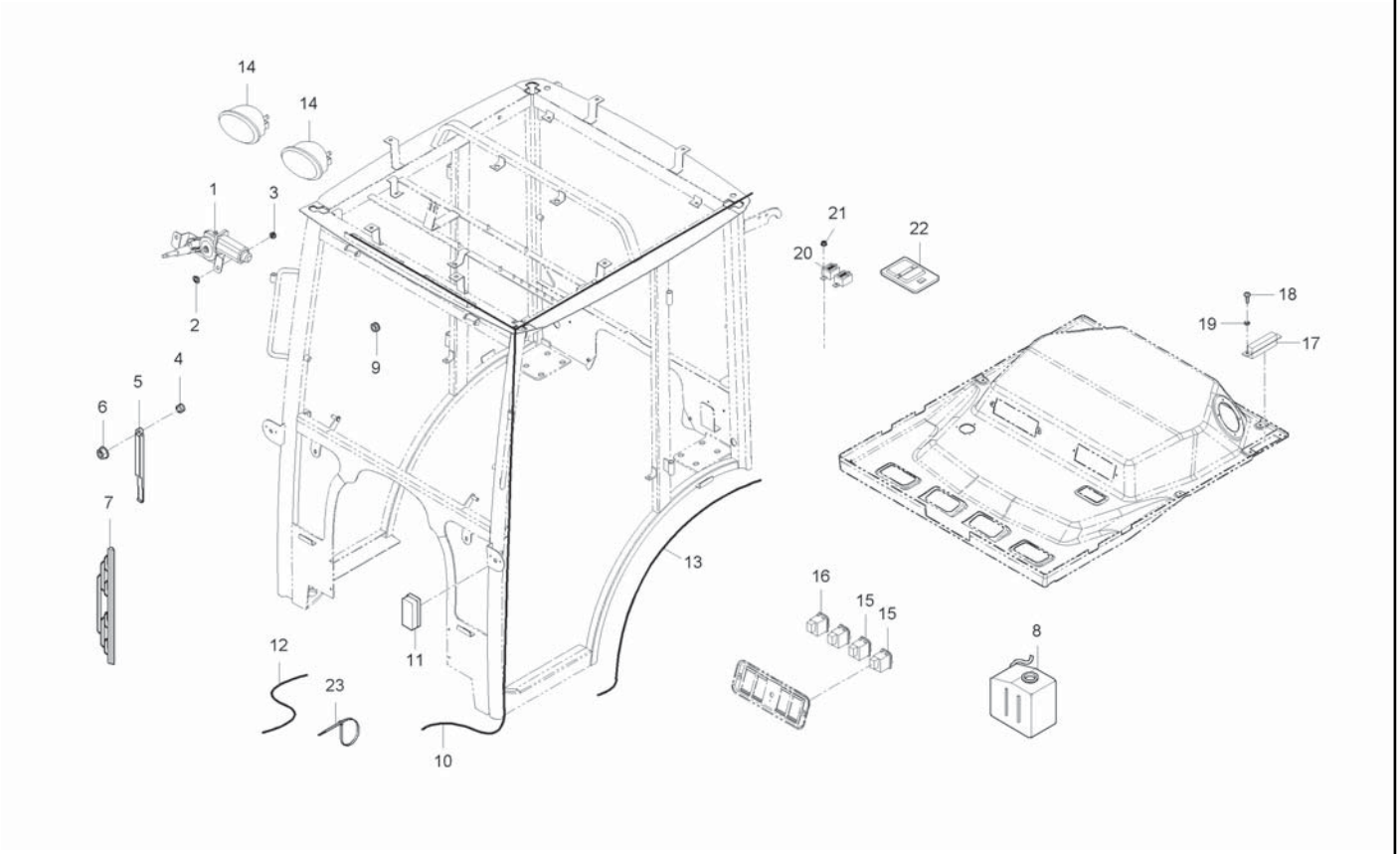

A : CK35-EU , B : CK35H-EU

No.	Part Number	Desciption	Q'TY A	Q'TY B	Q'TY C	Q'TY D	Q'TY E	I.C	Remark
20	T4180-69961	RELAY(5P)	3	3					
21	02751-50060	FLANGE NUT	3	3					M6*P1.0
22	T4815-82361	LAMP, ROOM	1	1					
23	T4520-82561	BAND, CORD	6	6					

----> Old replace New
<-X-> Not interchangeable
<-O-> Interchangeable with another part(s)
<---- New replace Old
<---> Interchangeable

CK30C-T9100A

SOUNDPROOF GROUP

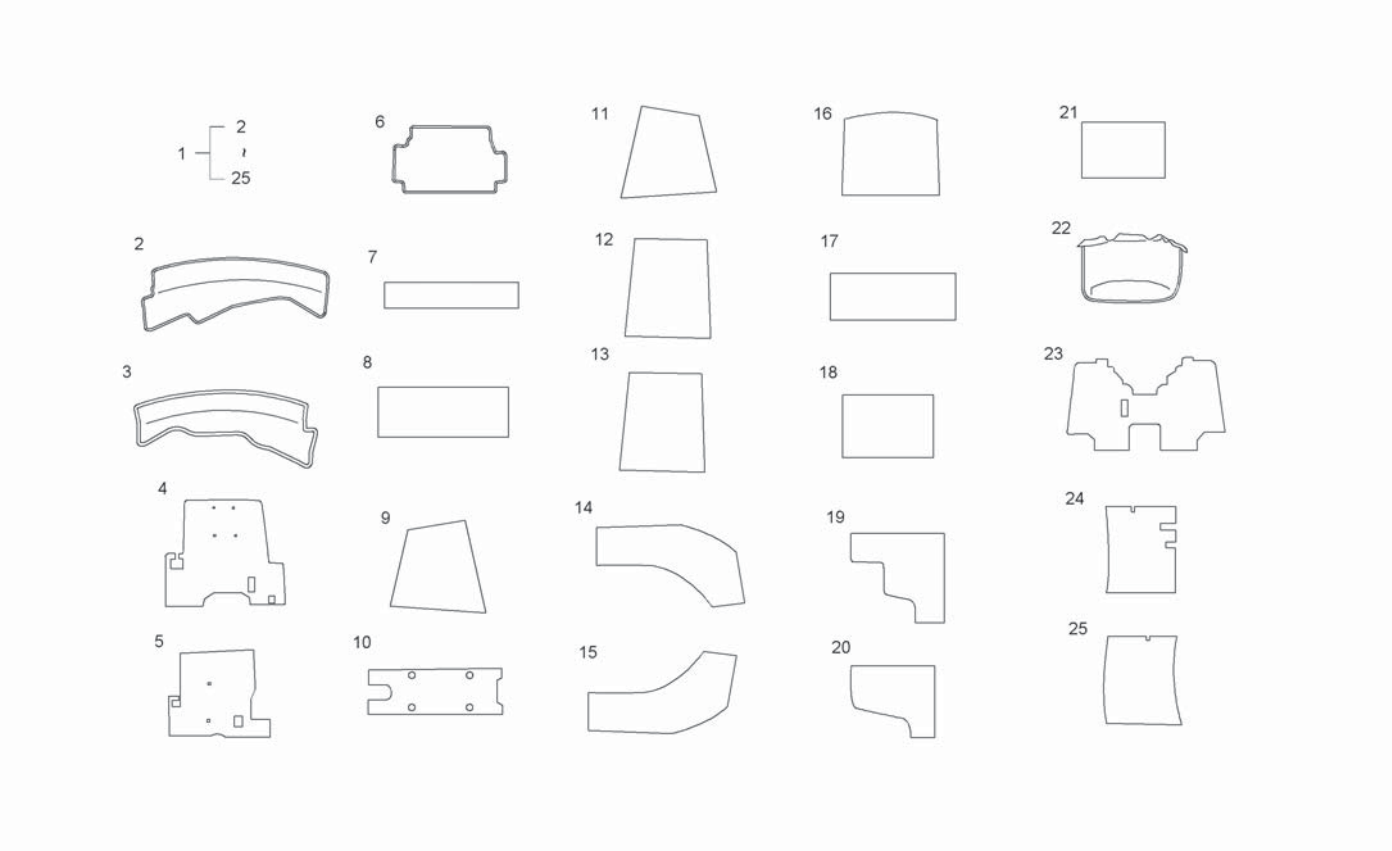

A : CK35-EU , B : CK35H-EU

No.	Part Number	Desciption	Q'TY A	B	C	D	E	I.C	Remark
1	T2135-80211	interior material ASSY	1						
2	T2131-98111	REZA COVER	1						
3	T2131-98121	REZA COVER	1						
4	T2135-96171	REZA COVER	1						
5	T2131-96211	REZA COVER (FLOOR, SEAT RR)	1						
6	T2131-96221	SOUND ABSORPTION PAD	1						
7	T2131-96231	SOUND ABSORPTION PAD	1						
8	T2131-94191	SOUND ABSORPTION PAD	1						
9	T2131-94151	SOUND ABSORPTION PAD	1						
10	T2131-94161	SOUND ABSORPTION PAD	1						
11	T2131-94171	SOUND ABSORPTION PAD	1						
12	T2131-94181	SOUND ABSORPTION PAD	1						
13	T2131-91251	SOUND ABSORPTION PAD	1						
14	T2131-91261	SOUND ABSORPTION PAD	1						
15	T2131-91111	SOUND ABSORPTION PAD	1						
16	T2131-91121	SOUND ABSORPTION PAD	1						
17	T2131-91131	SOUND ABSORPTION PAD	1						
18	T2131-91141	SOUND ABSORPTION PAD	1						
19	T2131-91151	SOUND ABSORPTION PAD	1						

----> Old replace New
<-X-> Not interchangeable
<-O-> Interchangeable with another part(s)
<---- New replace Old
<---> Interchangeable

CK30C-T9100A

SOUNDPROOF GROUP

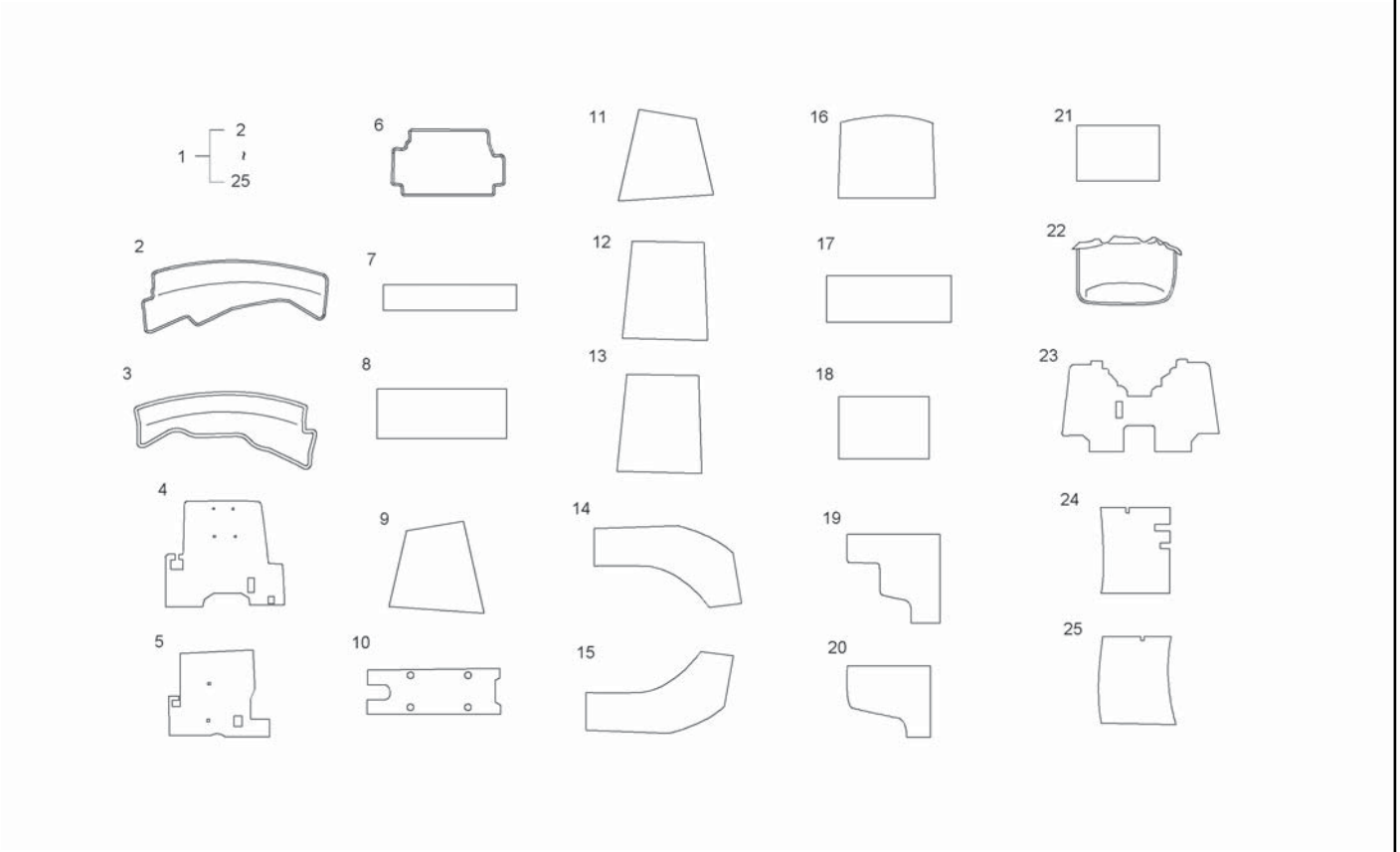

A : CK35-EU , B : CK35H-EU

No.	Part Number	Desciption	Q'TY A	B	C	D	E	I.C	Remark
20	T2131-91161	SPONGE, ENGINE ROOM COVER	1						
21	T2131-91171	SOUND ABSORPTION PAD, PLATE LH	1						
22	T2131-96111	SOUND INSULATION PAD	1						
23	T2131-96121	SOUND ABSORPTION PAD	1						
24	T2131-94131	SOUND INSULATION PAD	1						
25	T2131-94141	SOUND INSULATION PAD (INSTRUMENT RH	1						

----> Old replace New
<-X-> Not interchangeable
<-O-> Interchangeable with another part(s)
<---- New replace Old
<---> Interchangeable

CK30C-T9101A

SOUNDPROOF GROUP

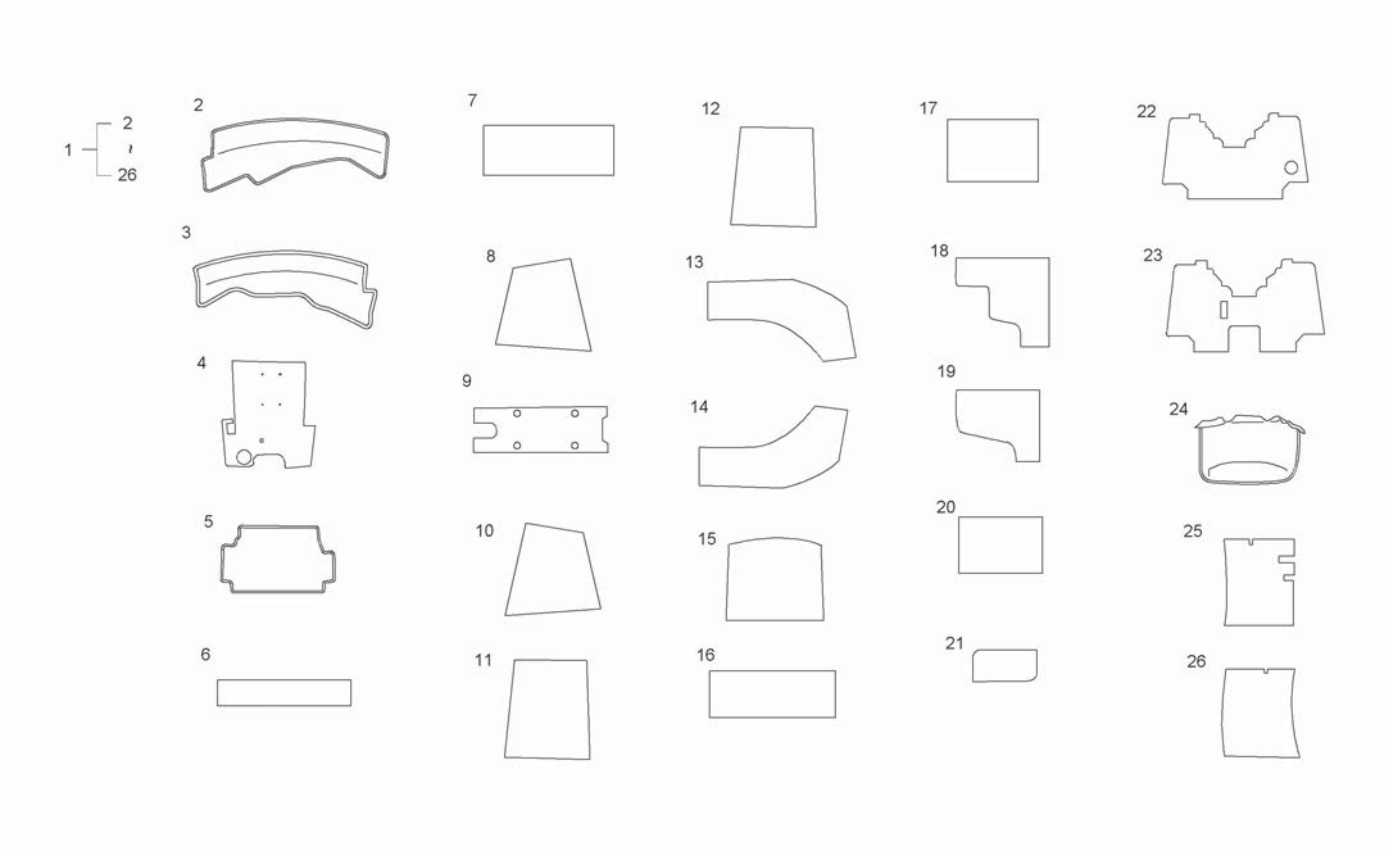

A : CK35-EU , B : CK35H-EU

No.	Part Number	Desciption	Q'TY					I.C	Remark
			A	B	C	D	E		
1	T2132-80211	interior material ASSY		1					
2	T2131-98111	REZA COVER		1					
3	T2131-98121	REZA COVER		1					
4	T2132-96171	REZA COVER(PLATE, FLOOR LWR/HST)		1					
5	T2131-96211	REZA COVER (FLOOR, SEAT RR)		1					
6	T2131-96221	SOUND ABSORPTION PAD		1					
7	T2131-96231	SOUND ABSORPTION PAD		1					
8	T2131-94191	SOUND ABSORPTION PAD		1					
9	T2131-94151	SOUND ABSORPTION PAD		1					
10	T2131-94161	SOUND ABSORPTION PAD		1					
11	T2131-94171	SOUND ABSORPTION PAD		1					
12	T2131-94181	SOUND ABSORPTION PAD		1					
13	T2131-91251	SOUND ABSORPTION PAD		1					
14	T2131-91261	SOUND ABSORPTION PAD		1					
15	T2131-91111	SOUND ABSORPTION PAD		1					
16	T2131-91121	SOUND ABSORPTION PAD		1					
17	T2131-91131	SOUND ABSORPTION PAD		1					
18	T2131-91141	SOUND ABSORPTION PAD		1					
19	T2131-91151	SOUND ABSORPTION PAD		1					

----> Old replace New
<-X-> Not interchangeable
<-O-> Interchangeable with another part(s)
<---- New replace Old
<---> Interchangeable

CK30C-T9101A

SOUNDPROOF GROUP

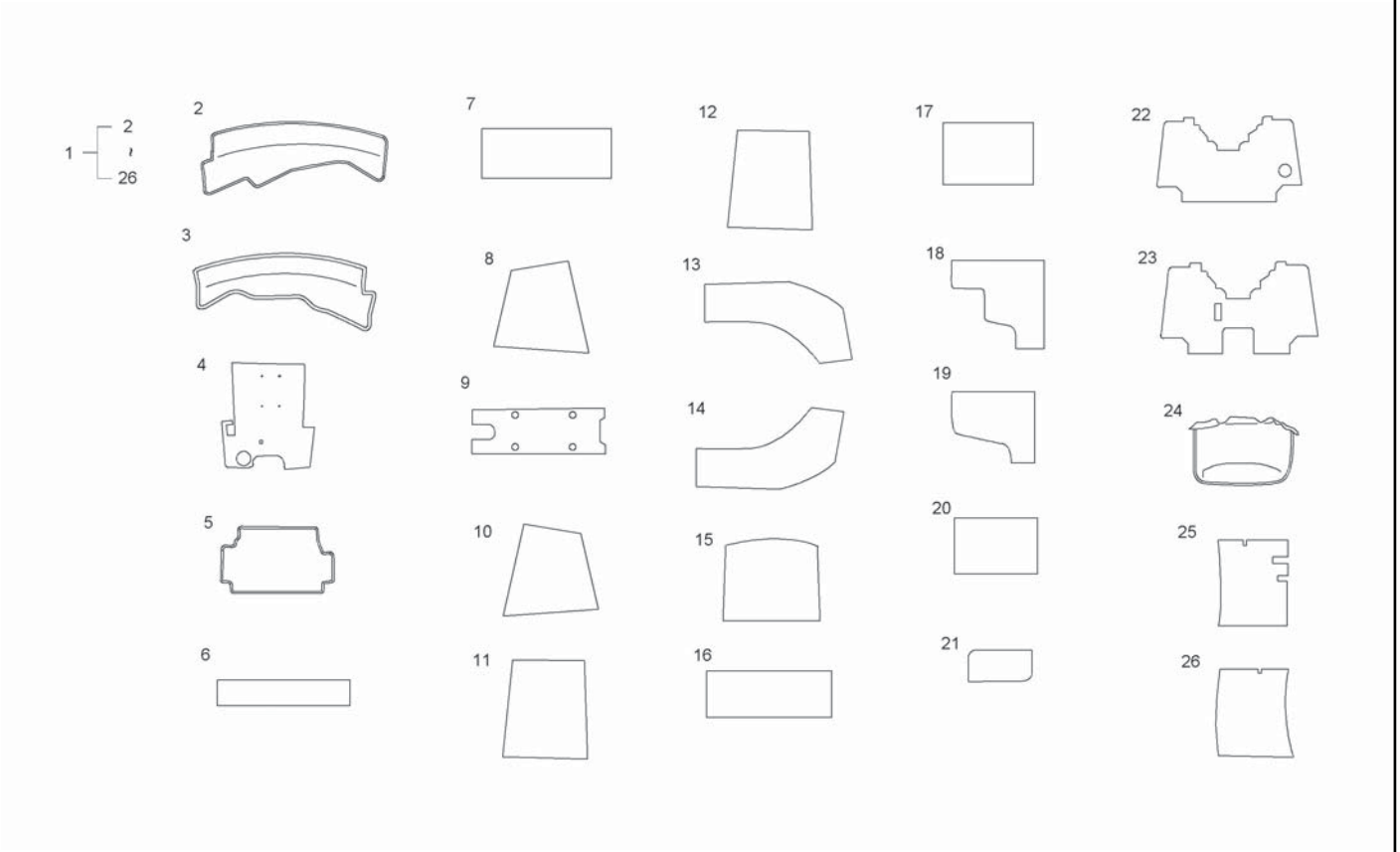

A : CK35-EU , B : CK35H-EU

No.	Part Number	Desciption	Q'TY A	Q'TY B	Q'TY C	Q'TY D	Q'TY E	I.C	Remark
20	T2131-91161	SPONGE, ENGINE ROOM COVER		1					
21	T2131-91171	SOUND ABSORPTION PAD, PLATE LH		1					
22	T2132-96111	SOUND ABSORPTION PAD(PLATE, FLOOR/H		1					
23	T2132-96131	SOUND ABSORPTION COVER, HST MISSION		1					
24	T2132-96121	SOUND ABSORPTION PAD(PLATE, FLOOR/H		1					
25	T2131-94131	SOUND INSULATION PAD		1					
26	T2131-94141	SOUND INSULATION PAD (INSTRUMENT RH		1					

----> Old replace New
<-X-> Not interchangeable
<-O-> Interchangeable with another part(s)

<---- New replace Old
<---> Interchangeable

CK20C-T9110A

BEACON LIGHT GROUP

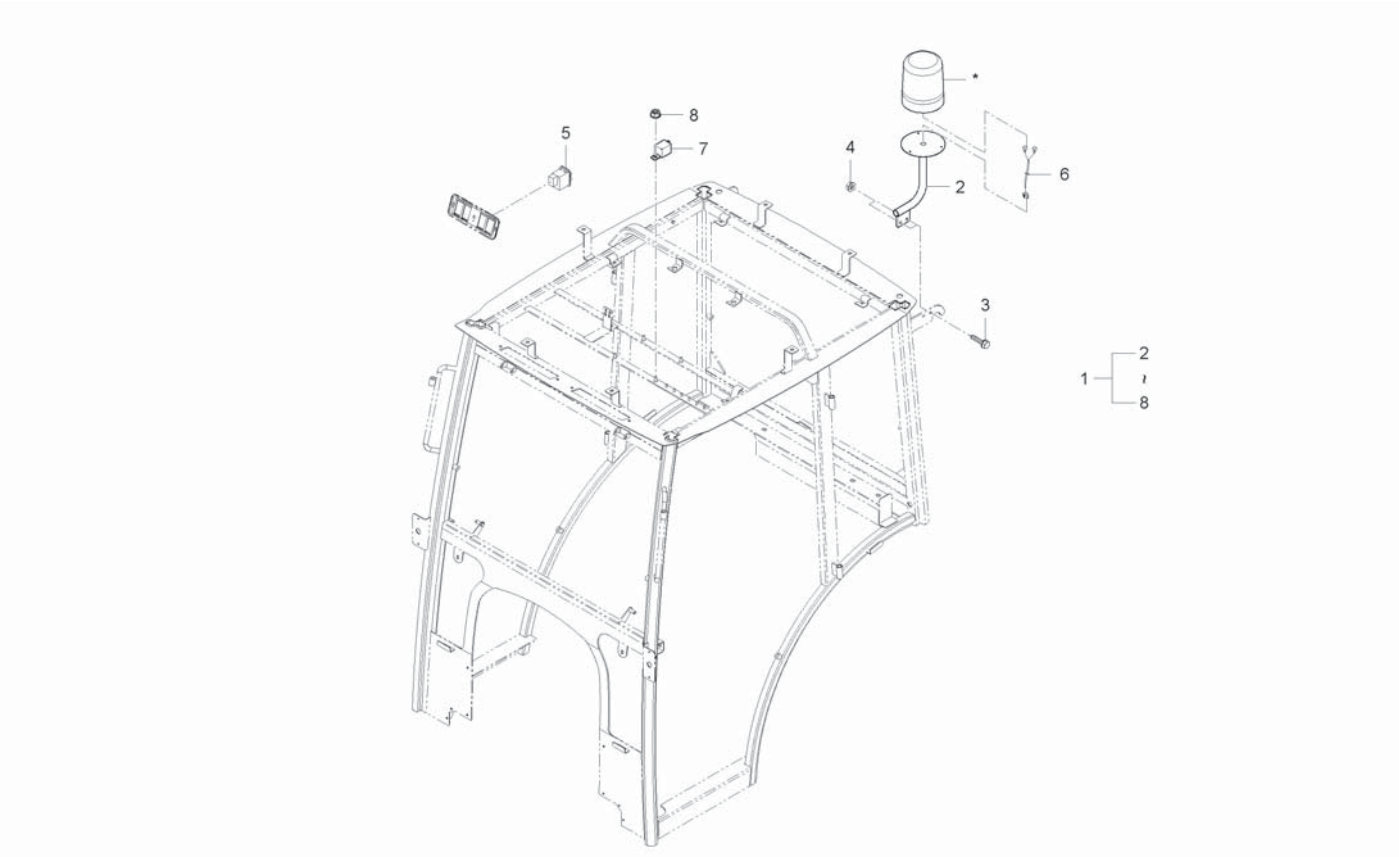

A : CK35-EU , B : CK35H-EU

No.	Part Number	Desciption	Q'TY A	Q'TY B	Q'TY C	Q'TY D	Q'TY E	I.C	Remark
1	T2131-88201	KIT, LAMP	1	1					
2	T4688-69312	BRACKET, PARKING BRAKE	1	1					
3	01754-50812	BOLT, FLANGE	2	2					M8*P1.25
4	02751-50080	FLANGE NUT	2	2					M8X1.25
5	T4520-54222	SWITCH, WORKING LAMP	1	1					
6	T4688-69321	WIRE 2, LAMP CONNECTION HARNESS	1	1					
7	T4180-69961	RELAY(5P)	1	1					
8	02751-50060	FLANGE NUT	2	2					M6*P1.0

----> Old replace New
<-X-> Not interchangeable
<-O-> Interchangeable with another part(s)
<---- New replace Old
<---> Interchangeable

CK20C-T9120A

WORKING LIGHT GROUP

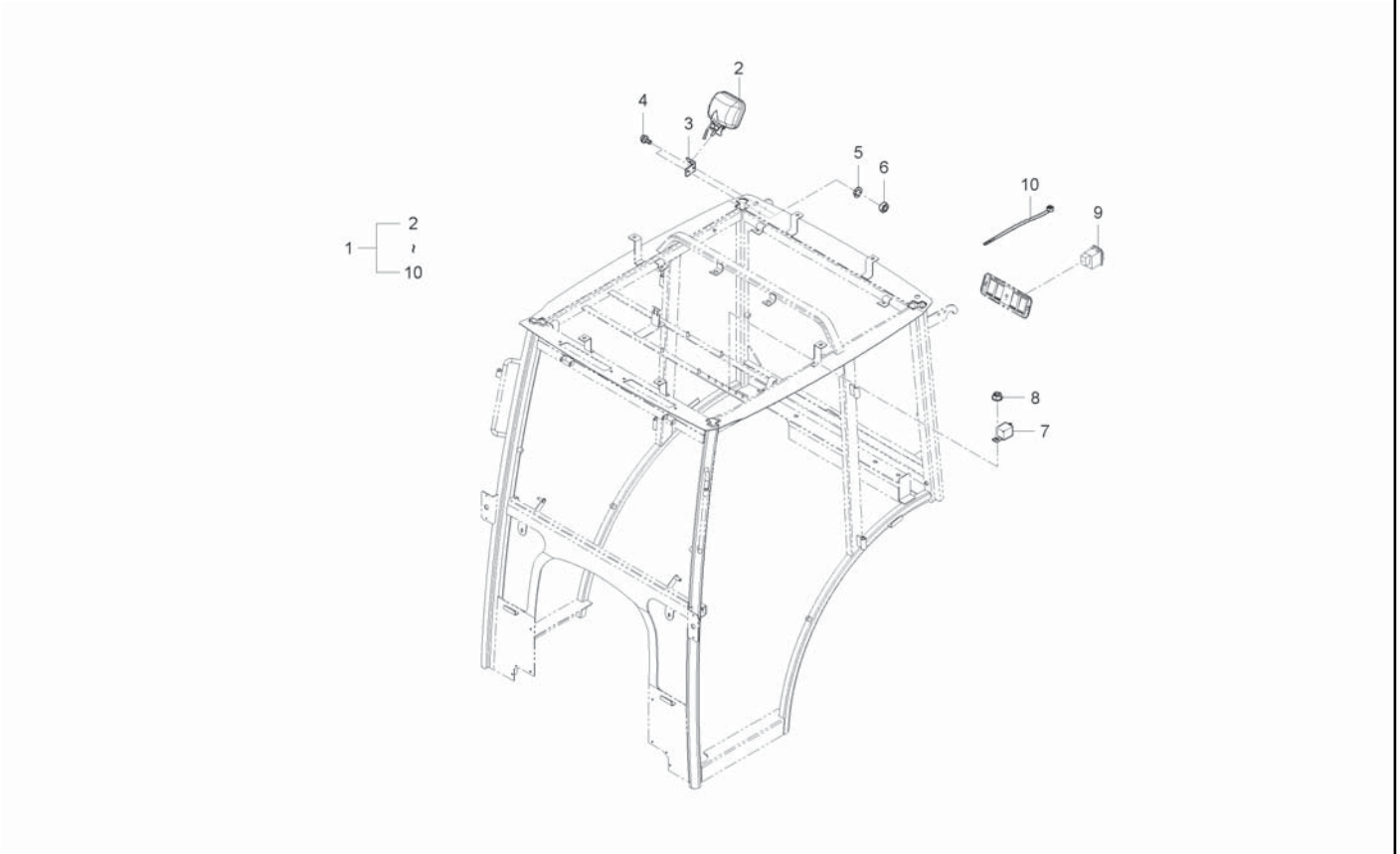

A : CK35-EU , B : CK35H-EU

No.	Part Number	Desciption	Q'TY A	Q'TY B	Q'TY C	Q'TY D	Q'TY E	I.C	Remark
1	T2131-88301	KIT, WORKING LAMP	1	1					
2	T2131-89101	ASSY LAMJP,WORKING	1	1					
3	T2131-89111	BRACKET, REAR WORKING LAMP	1	1					
4	01754-50812	BOLT, FLANGE	2	2					M8*P1.25
5	04512-50080	SPRING WASHER	2	2					M08
6	02114-50080	NUT	2	2					M8*P1.25
7	T4180-69961	RELAY(5P)	1	1					
8	02751-50060	FLANGE NUT	1	1					M6*P1.0
9	T4520-54222	SWITCH, WORKING LAMP	1	1					
10	T4520-82551	BAND, CORD	3	3					

----> Old replace New
<-X-> Not interchangeable
<-O-> Interchangeable with another part(s)
<---- New replace Old
<---> Interchangeable

CK20C-T9130A

CD PLATER GROUP

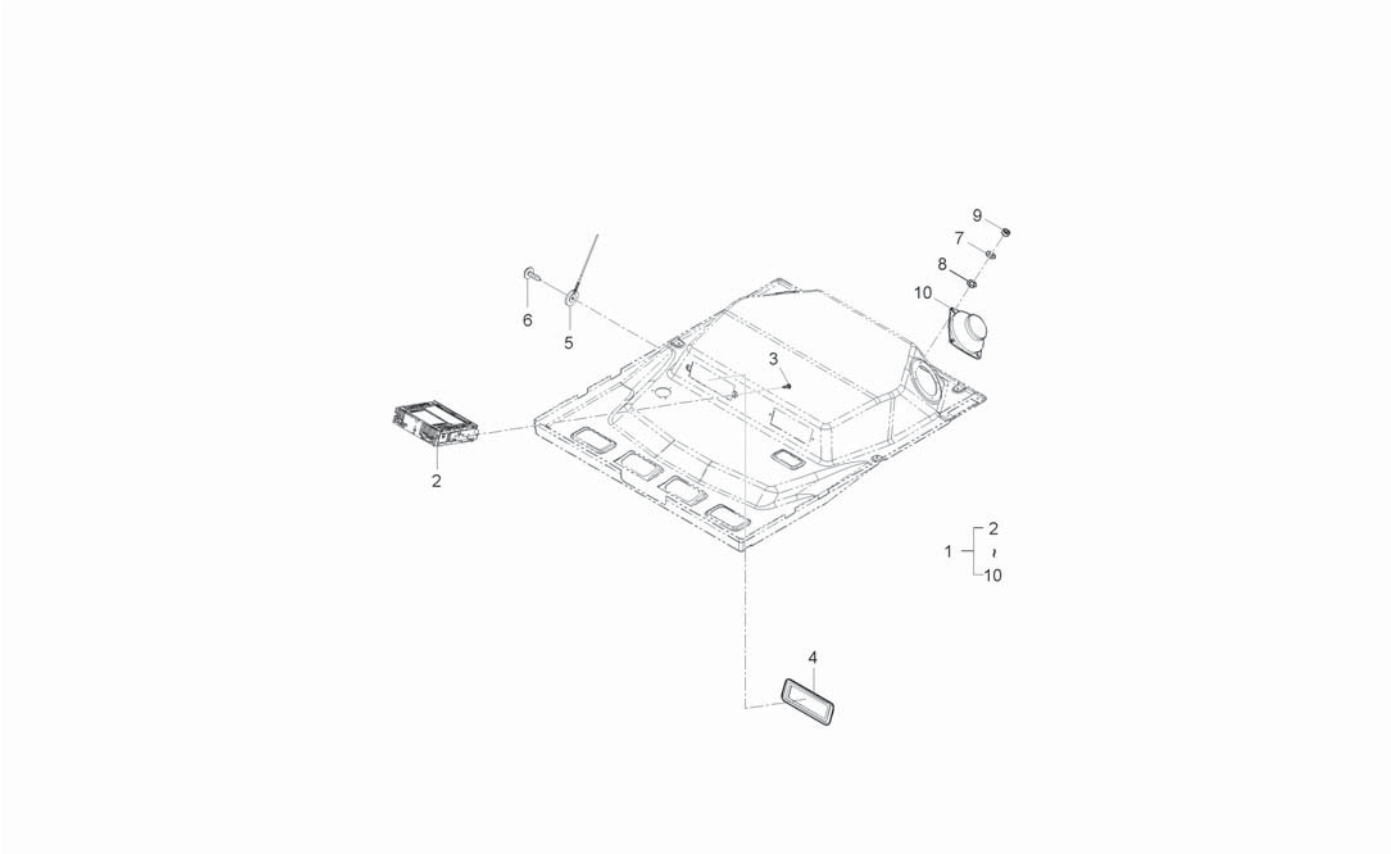

A : CK35-EU , B : CK35H-EU

No.	Part Number	Desciption	Q'TY A	Q'TY B	Q'TY C	Q'TY D	Q'TY E	I.C	Remark
1	T2131-89401	KIT, CD PALYER	1	1					
2	T4930-55411	ASSY,STEREO	1	1					
3	03024-50420	SCREW, WASHER	2	2					
4	T4930-54501	COVER	1	1					
5	T4810-82421	ANTENNA ASSY	1	1					
6	03014-50625	SCREW	1	1					
7	04512-50060	WASHER, SPRING	1	1					M6
8	04013-50060	WASHER, PLAIN	1	1					M6
9	02114-50060	NUT	1	1					
10	T4810-82341	ASSY,SPKER	2	2					

----> Old replace New
<-X-> Not interchangeable
<-O-> Interchangeable with another part(s)
<---- New replace Old
<---> Interchangeable

CK30M-T490A

REAR WHEEL GROUP

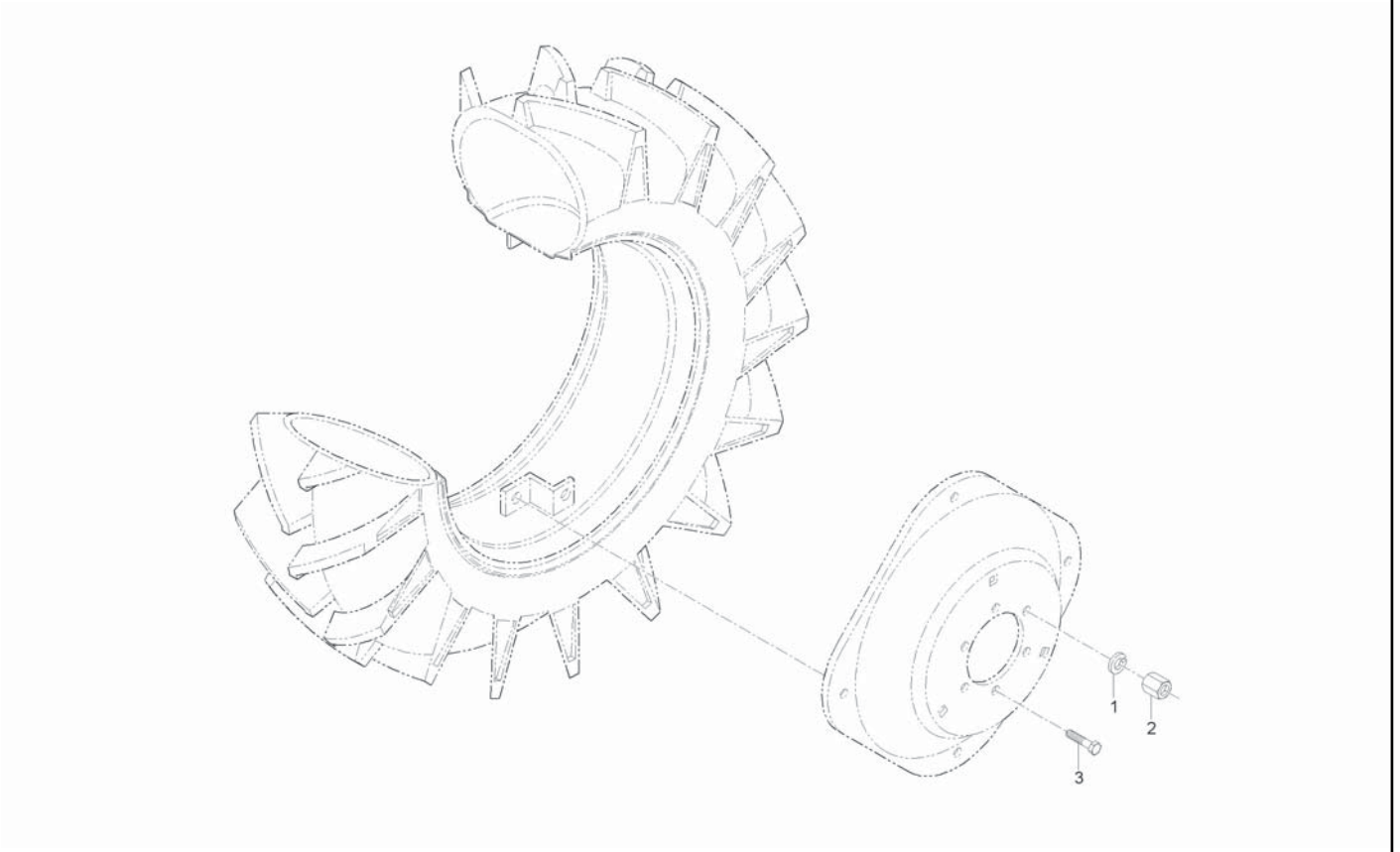

A : CK35-EU , B : CK35H-EU

No.	Part Number	Desciption	Q'TY A	Q'TY B	Q'TY C	Q'TY D	Q'TY E	I.C	Remark
1	04512-50160	WASHER, SPRING	12	12					M16
2	T4340-27131	NUT	4	4					
2	02076-50160	NUT	4	4				<-O->	
3	01173-51635	BOLT	8	8					M16*P1.5
3	01073-51630	BOLT	8	8				<----	

----> Old replace New
<-X-> Not interchangeable
<-O-> Interchangeable with another part(s)
<---- New replace Old
<---> Interchangeable

CK30ME-T490A

REAR WHEEL GROUP

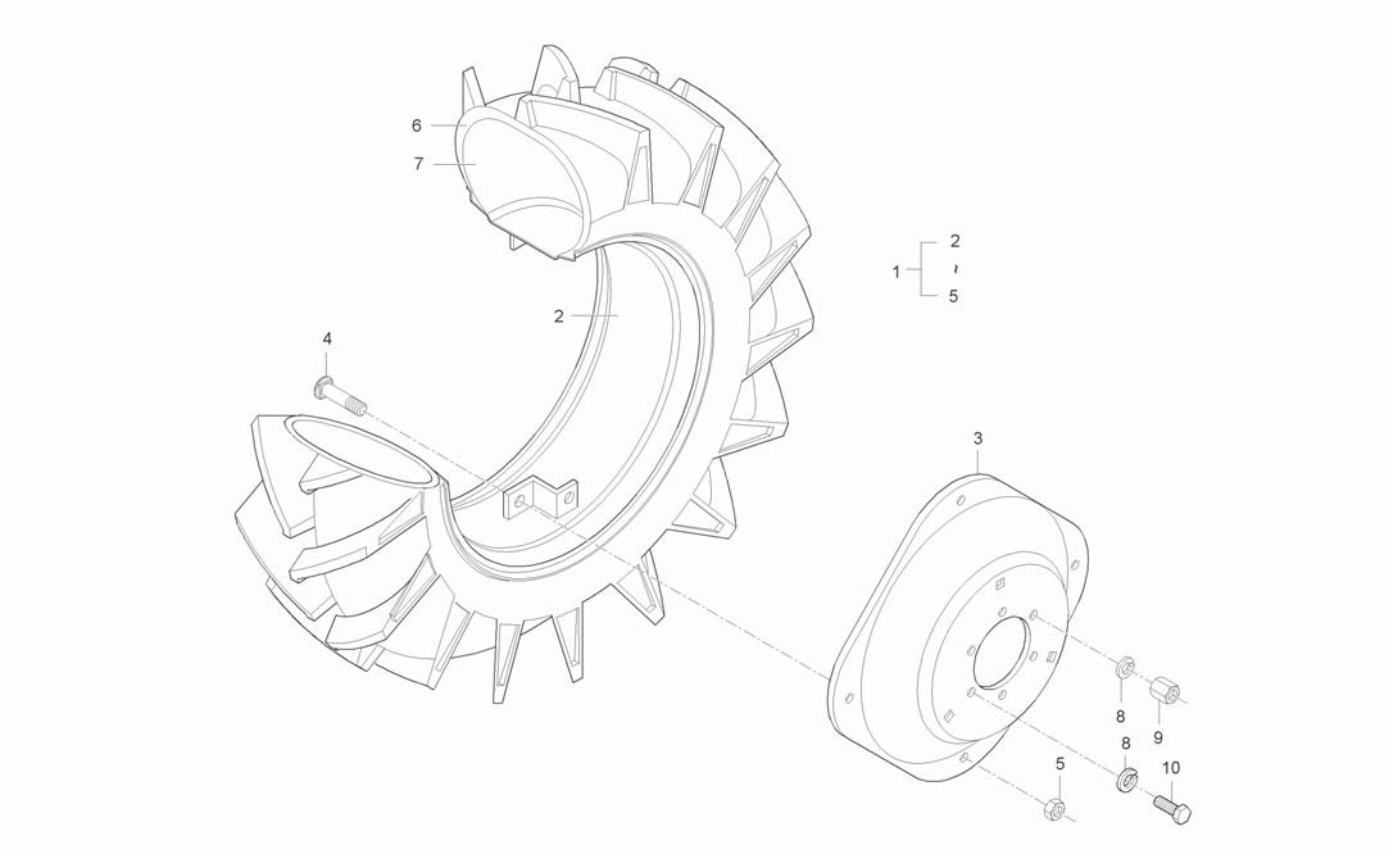

A : CK35-EU , B : CK35H-EU

No.	Part Number	Desciption	Q'TY A	Q'TY B	Q'TY C	Q'TY D	Q'TY E	I.C	Remark
1	T2540-A0040BE	REAR WHEEL ASSY	2	2					
2	T2540-27651	WHEEL, RR	2	2					
3	T4240-27672	DISK	2	2					
4	T4240-27682	BOLT	8	8					
5	T4260-27691	NUT, FIXING	8	8					
6	T2540-27621	TIRE, 11.2X24 4H	2	2					
7	T2540-27631	TUBE, 11.2X24	2	2					
8	04512-50160	WASHER, SPRING	12	12					M16
9	T4340-27131	NUT	4	4					
10	01173-51635	BOLT	8	8					M16*P1.5

----> Old replace New
<-X-> Not interchangeable
<-O-> Interchangeable with another part(s)
<---- New replace Old
<---> Interchangeable

DK45HSE-T495A

REAR WHEEL GROUP

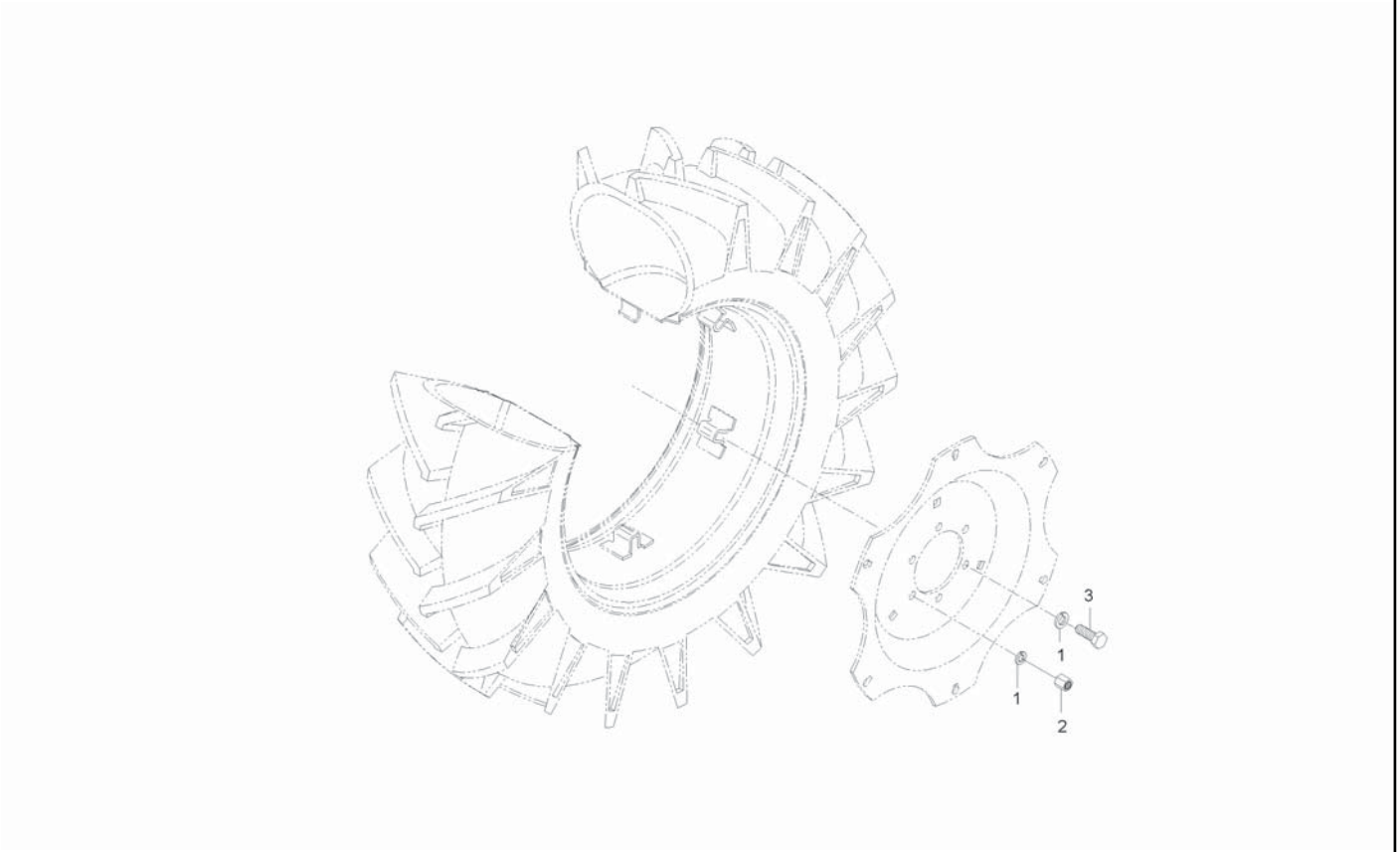

A : CK35-EU , B : CK35H-EU

No.	Part Number	Desciption	Q'TY A	Q'TY B	Q'TY C	Q'TY D	Q'TY E	I.C	Remark
1	04512-50160	WASHER, SPRING	12	12					M16
2	T4340-27131	NUT	4	4					
3	01173-51635	BOLT	8	8					M16*P1.5
3	01073-51630	BOLT	8	8				<--->	

----> Old replace New
<-X-> Not interchangeable
<-O-> Interchangeable with another part(s)
<---- New replace Old
<---> Interchangeable

CK30M-T570A

FRONT WHEEL GROUP

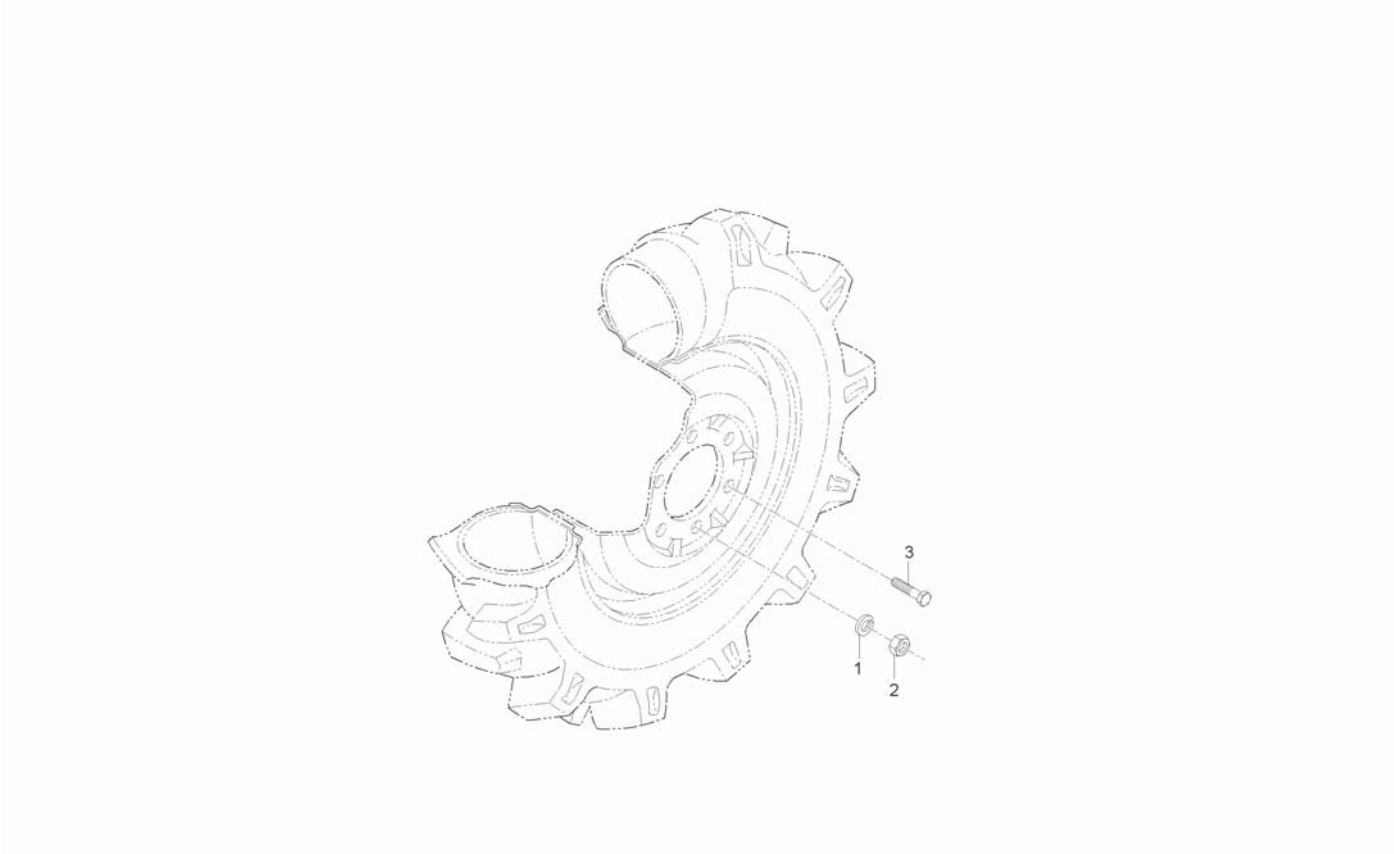

A : CK35-EU , B : CK35H-EU

No.	Part Number	Desciption	Q'TY A	Q'TY B	Q'TY C	Q'TY D	Q'TY E	I.C	Remark
1	04512-50120	WASHER, SPRING	12	12					M12
1	04512-50120	WASHER, SPRING	4	4				<--->	M12
2	02176-50120	NUT	4	4					M12*1.25
3	01173-51225	BOLT	8	8					M10*1.25
3	01133-51225	BOLT, WASHER	8	8				<--->	M12*P1.25

----> Old replace New
<-X-> Not interchangeable
<-O-> Interchangeable with another part(s)
<---- New replace Old
<---> Interchangeable

CK30ME-T570A

FRONT WHEEL GROUP

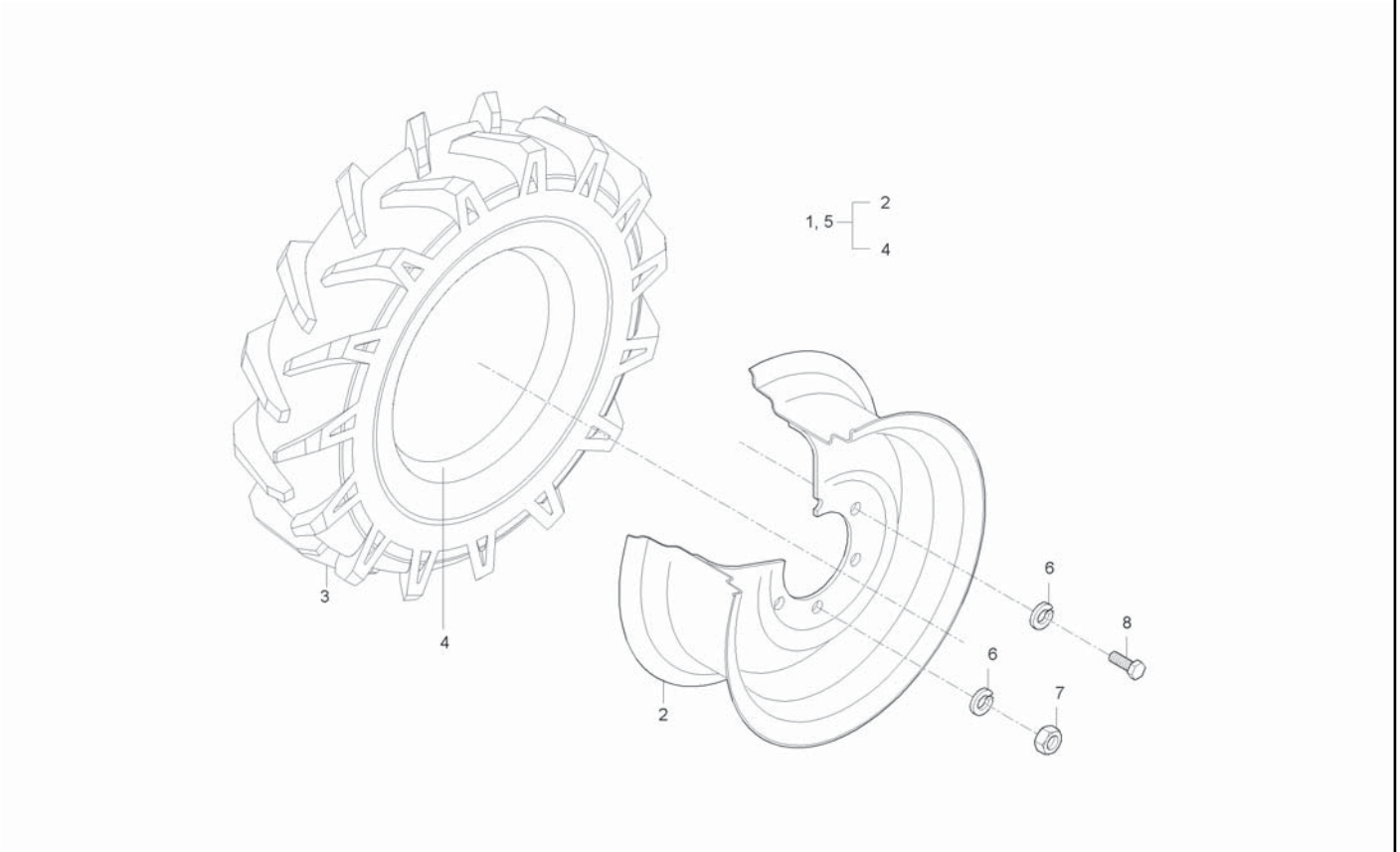

A : CK35-EU , B : CK35H-EU

No.	Part Number	Desciption	Q'TY A	Q'TY B	Q'TY C	Q'TY D	Q'TY E	I.C	Remark
1	T2185-49401	FRONT WHEEL ASSY, LH	1	1					
2	T2185-49281	RIM ASSY, 5JAX14	1	1					
3	T2540-43751	TIRE, 7X14 4L	1	1					
4	T2540-43761	TUBE, 7X14	1	1					
5	T2185-49451	FRONT WHEEL ASSY, RH	1	1					
6	04512-50120	WASHER, SPRING	12	12					M12
7	02176-50120	NUT	4	4					M12*1.25
8	01173-51225	BOLT	8	8					M10*1.25

----> Old replace New
<-X-> Not interchangeable
<-O-> Interchangeable with another part(s)
<---- New replace Old
<---> Interchangeable

CK30M-T767-4A REMOTE HYDRAULIC LEVER GROUP

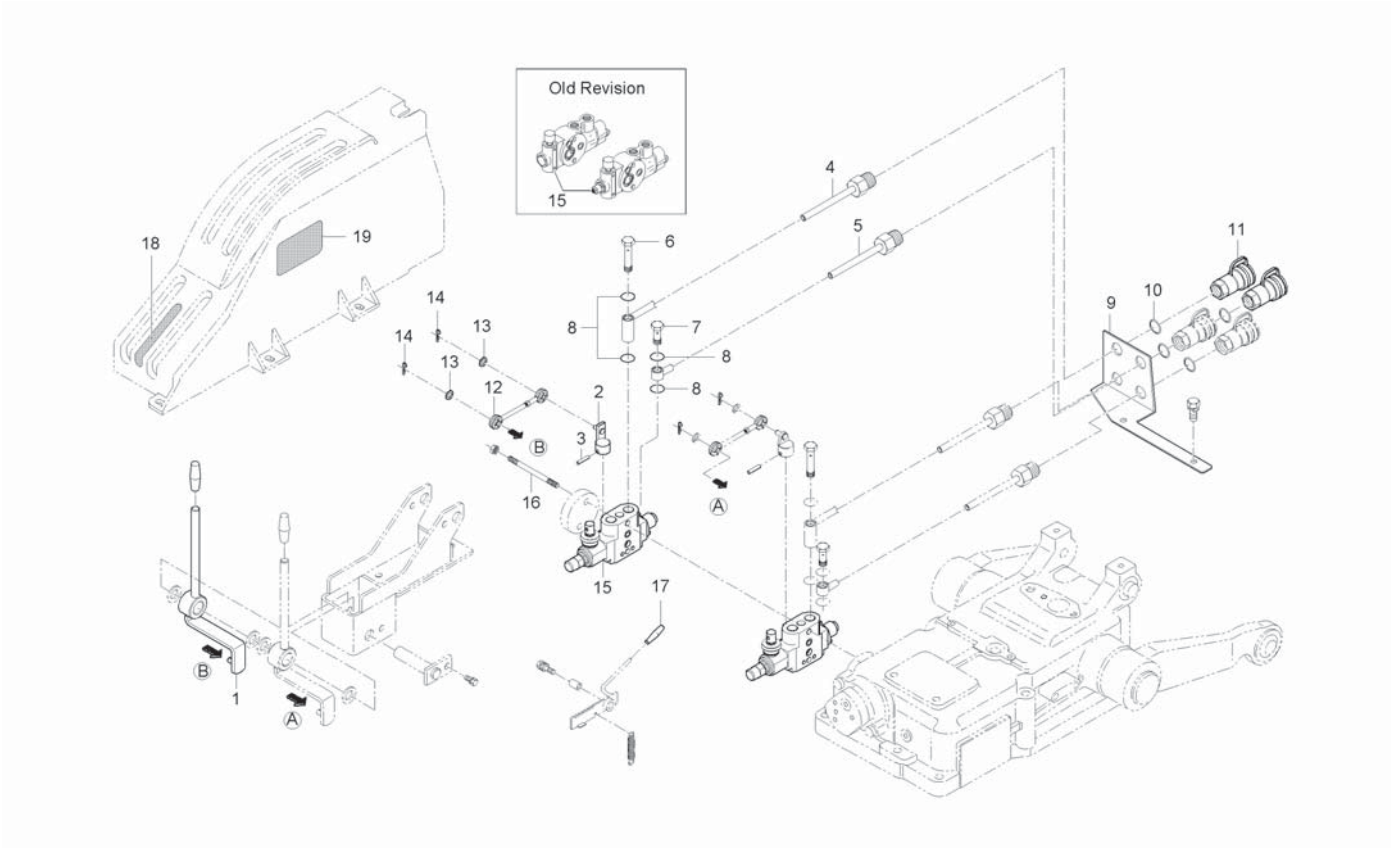

A : CK35-EU , B : CK35H-EU

No.	Part Number	Desciption	Q'TY A	Q'TY B	Q'TY C	Q'TY D	Q'TY E	I.C	Remark
1	T2185-65364	LEVER, DOUBLE ACTING RH	1	1 ~JT8900085					
1	T2155-65361	LEVER,DOUBLE(RH)	1	1 KT8900001~				<-X->	
2	T2185-68502	LEVER 2, DOUBLE ACTING	1	1 ~JT8900085					
2	T2155-68501	LEVER 2 (DOUBLE)	1	1 KT8900001~				<-X->	
3	05411-00630	PIN, SPRING	1	1 ~JT8900085					DIA6*30
3	T2610-39572	SCREW, HOLDER	1	1 KT8900001~				<-X->	
4	T2185-90032	TUBE C, HYDRAULIC	1	1 ~JT8900085					
4	T2155-90031	TUBE C, HYD	1	1 KT8900001~				<-X->	
5	T2185-90042	TUBE D, COOLING	1	1 ~JT8900085					
5	T2155-90041	TUBE D, HYD	1	1 KT8900001~				<-X->	
6	T4520-37372	BOLT 2, JOINT	1	1					
7	T4520-90042	BOLT,JOINT	1	1					
8	04811-00200	O RING	4	4					
9	T2185-90072	SUPPORT, SOCKET	1	1					
10	04612-00220	SNAP RING	2	2					
11	T4520-90093	COUPLER SOCKET ASSY	2	2					
12	T4686-68521	ROD 2, DOUBLE ACTING	1	1					
13	04013-50080	WASHER	2	2					M8
14	05525-50800	PIN, SNAP	2	2					

----> Old replace New
<-X-> Not interchangeable
<-O-> Interchangeable with another part(s)
<---- New replace Old
<---> Interchangeable

CK30M-T767-4A REMOTE HYDRAULIC LEVER GROUP

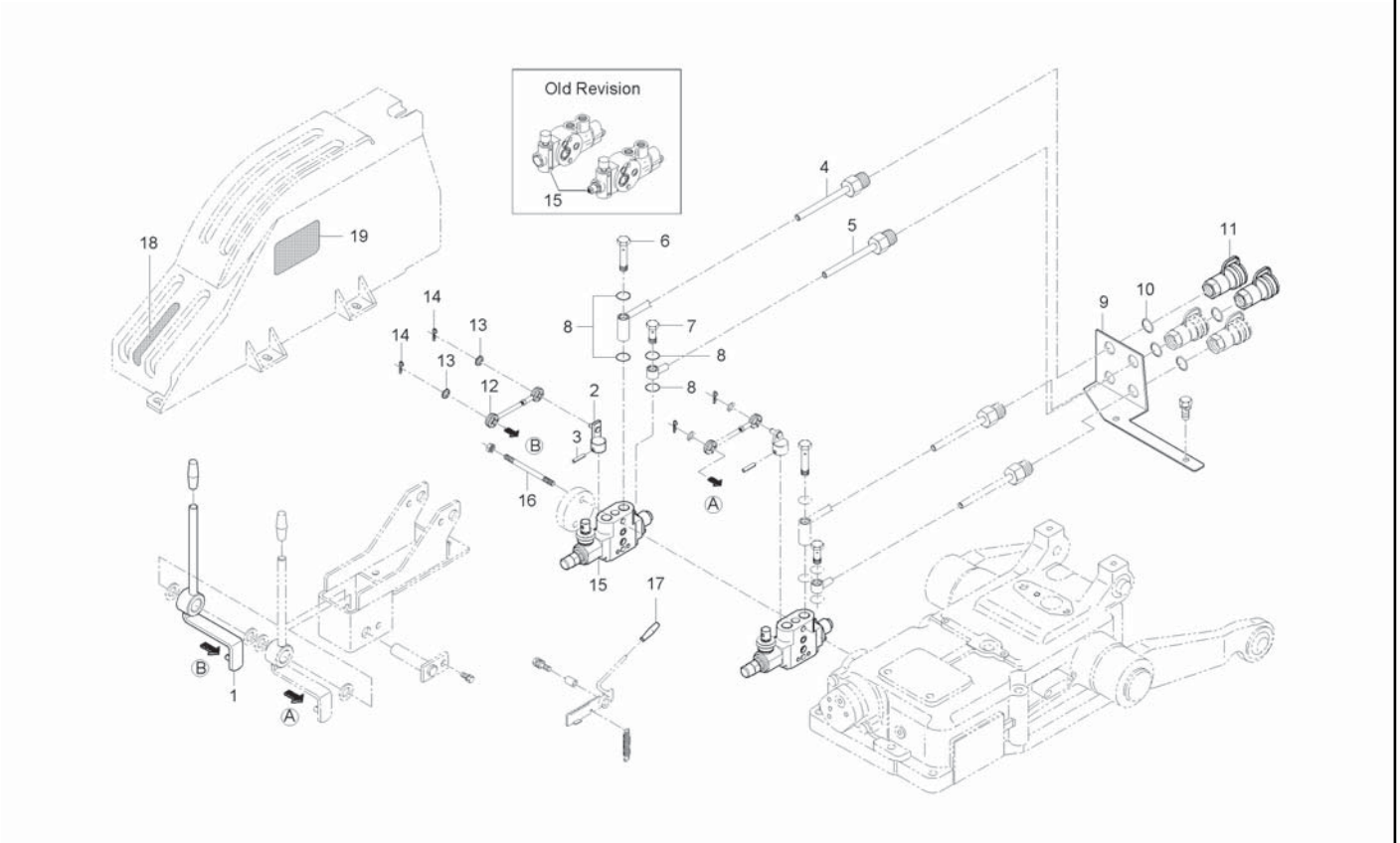

A : CK35-EU , B : CK35H-EU

No.	Part Number	Desciption	Q'TY A	Q'TY B	Q'TY C	Q'TY D	Q'TY E	I.C	Remark
15	008274	VALVE, DOUBLE ACTING FLOATING	1	1 ~JT8900085					
15	T2610-39021	VALVE, FLOATING	1	1 KT8900001~				<-X->	
16	T4681-37861	STUD, M10X120MM	2	2 ~JT8900085					
16	T2610-37852	STUD, M10X131MM	2	2 KT8900001~				<-X->	
17	T2350-55922	GRIP, PARKING BRAKE	1	1					
18	T2181-53271	LABEL, DOLBLE ACTING	1	1					
18	T2181-53272	LABEL, DOLBLE ACTING	1	1				<--->	
19	T2615-52141	LABEL, FLOATING WARNING	1	1					

----> Old replace New
<-X-> Not interchangeable
<-O-> Interchangeable with another part(s)
<---- New replace Old
<---> Interchangeable

CK30E-T1000A

TURF TIRES GROUP

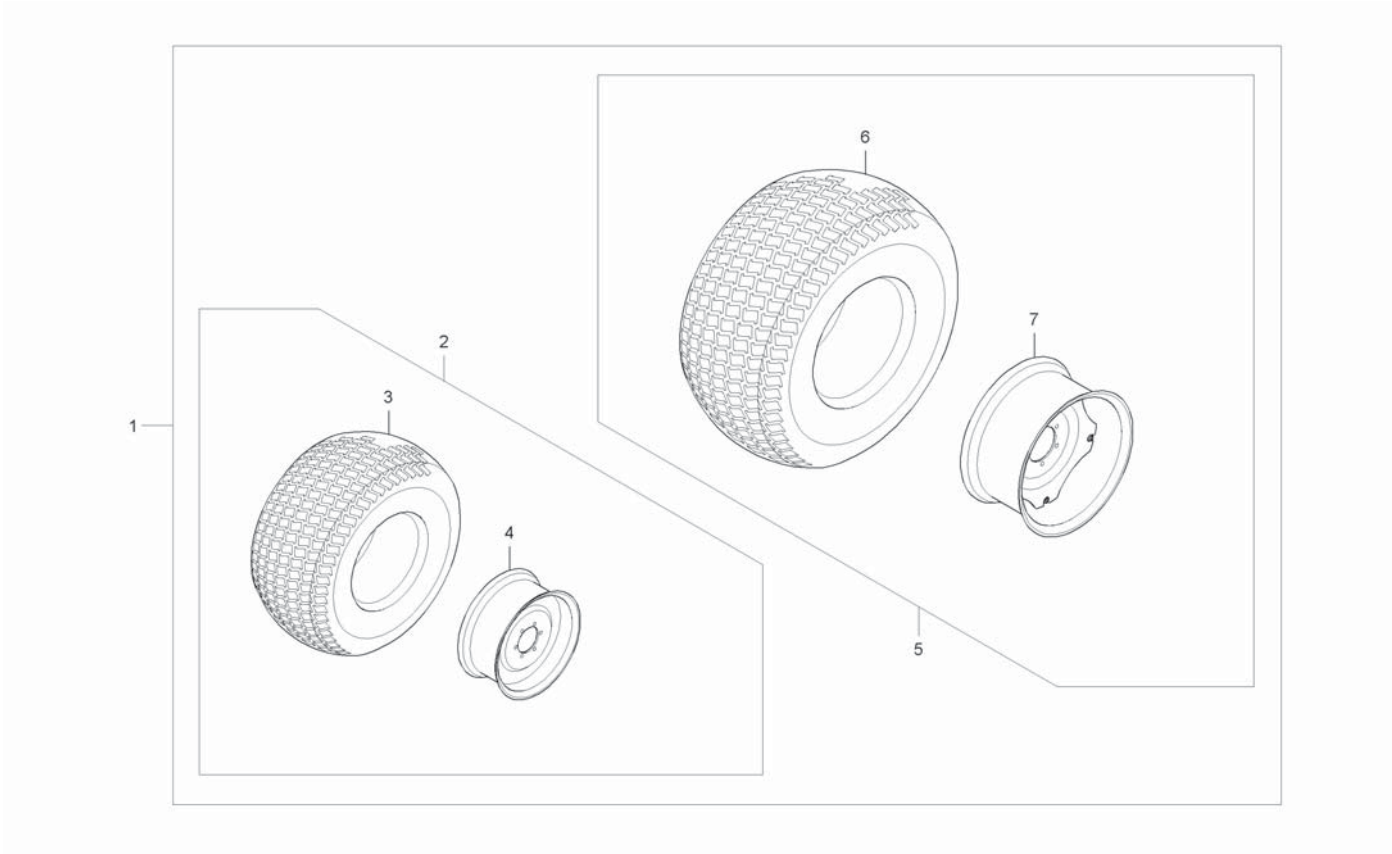

A : CK35-EU , B : CK35H-EU

No.	Part Number	Desciption	Q'TY A	Q'TY B	Q'TY C	Q'TY D	Q'TY E	I.C	Remark
1	T2188-A03000101	TURF TIRES GROUP	1	1					
2	T2188-47501	ASSY, FRONT WHEEL	2	2					
3	T2188-47531	TIRE	1	1					
4	T2188-47551	ASS'Y, RIM	1	1					
5	T2188-43501	REAR TIRE ASS'Y	2	2					
6	T2188-43531	TIRE	1	1					
7	T2188-43751	ASS'Y, RIM	1	1					

----> Old replace New
<-X-> Not interchangeable
<-O-> Interchangeable with another part(s)
<---- New replace Old
<---> Interchangeable

CK30ME-T1020A

PIN SOCKET GROUP

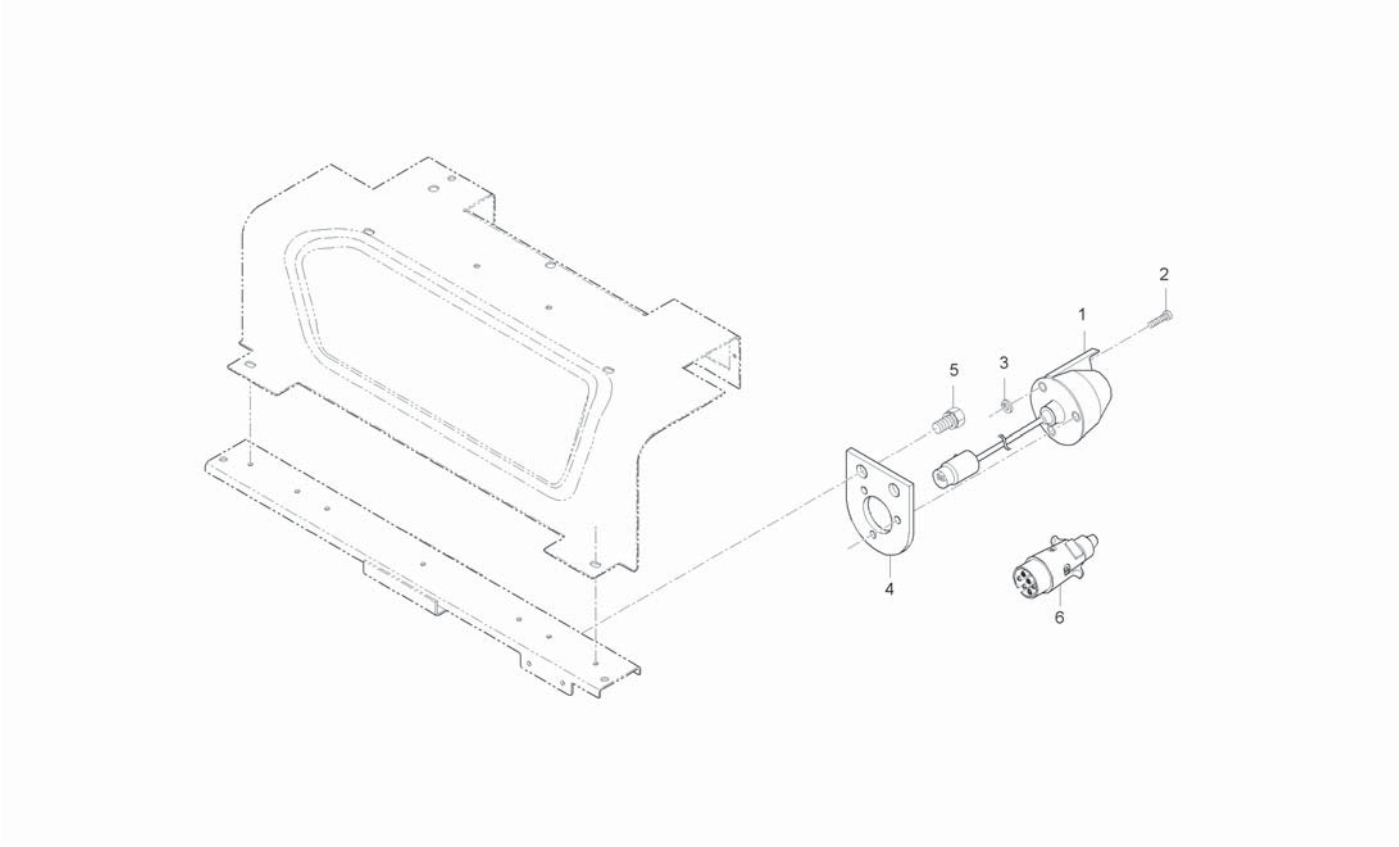

A : CK35-EU , B : CK35H-EU

No.	Part Number	Desciption	Q'TY A	Q'TY B	Q'TY C	Q'TY D	Q'TY E	I.C	Remark
1	T2611-69932	SOCKET, 7 PIN	1	1					
2	03054-50540	BOLT	3	3					
3	04512-50050	WASHER, SPRING	3	3					M5
4	T2185-95611	BRACKET, SOCKET 7 PIN	1 ~FT8100016						
4	T2185-95612	BRACKET, SOCKET 7 PIN	1 GT8100001~	1				<-X->	
5	01123-50816	BOLT, WASHER	2	2					M8*P1.25
6	T4810-69941	SOCKET, 7 PIN 2	1	1					

----> Old replace New
<-X-> Not interchangeable
<-O-> Interchangeable with another part(s)
<---- New replace Old
<---> Interchangeable

CK30ME-T1030A

REAR VIEW MIRROR GROUP

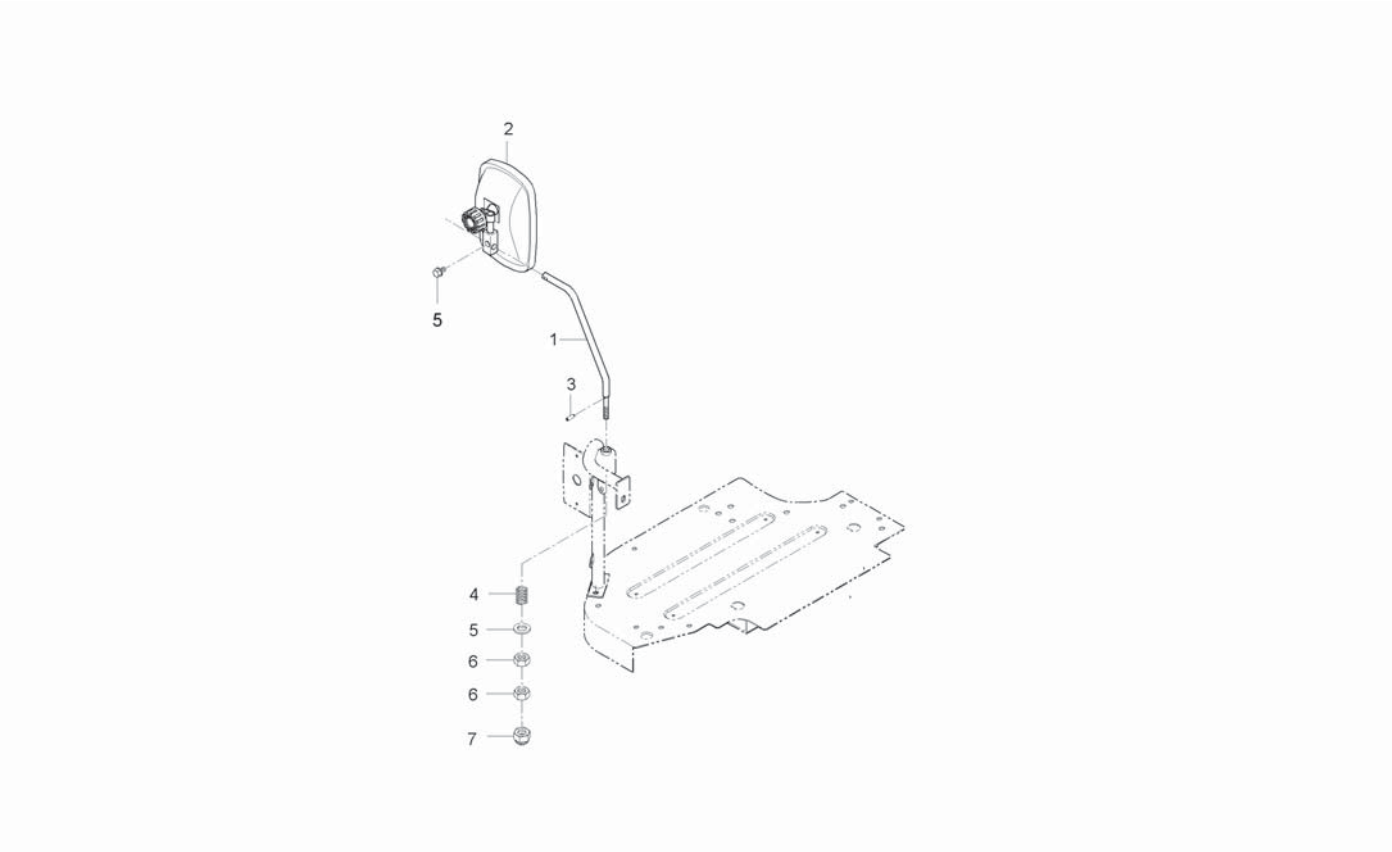

A : CK35-EU , B : CK35H-EU

No.	Part Number	Desciption	Q'TY A	Q'TY B	Q'TY C	Q'TY D	Q'TY E	I.C	Remark
1	T2181-81532	ROD, REAR VIEW MIRROR SUPPORT	1	1					
2	T2611-87822	REARVIEW MIRROR	1	1					
3	05411-00525	PIN, SPRING	1	1					DIA5*25
4	T2611-81541	SPRING, REARVIEW MIRROR	1	1					
5	04011-50120	WASHER, PLAIN	1	1					M12
6	02174-50120	NUT	2	2					M12*P1.25
7	T4520-53891	CAP, RUBBER	1	1					

----> Old replace New
<-X-> Not interchangeable
<-O-> Interchangeable with another part(s)

<---- New replace Old
<---> Interchangeable

CK30M-T1040A

SUN ROOF GROUP

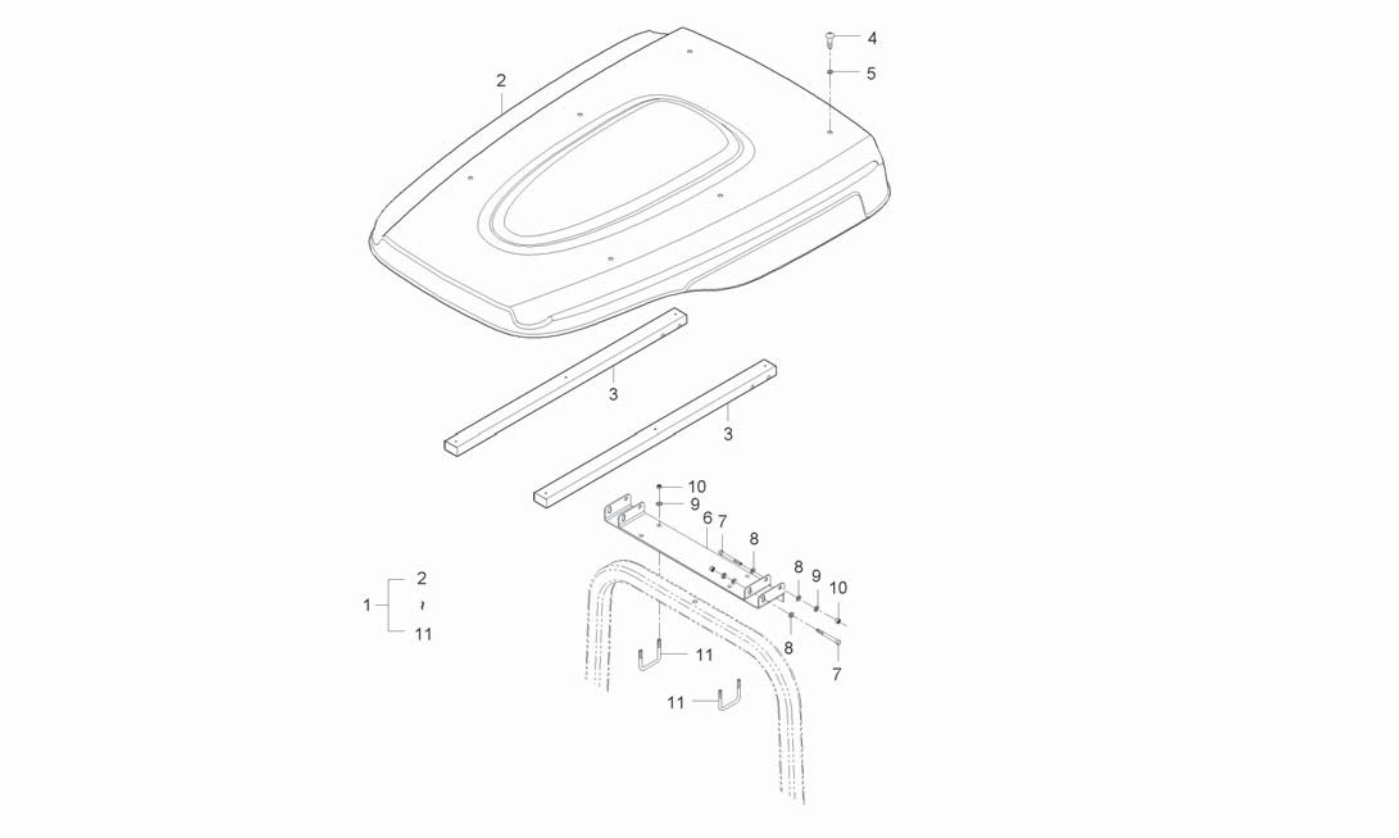

A : CK35-EU , B : CK35H-EU

No.	Part Number	Desciption	Q'TY A	Q'TY B	Q'TY C	Q'TY D	Q'TY E	I.C	Remark
1	T2185-85103	SUNROOF ASSY	1	1					
1	T2185-85104	SUNROOF ASSY	1	1				<----	
2	T2185-85112	SUNROOF	1	1					
3	T2615-85112	TUBE	2 ~HT8100038	2 ~HT8900076					
3	T2615-85112BB	TUBE	2 HT8100039~	2 JT8900001~				<-X->	
4	38240-1883-1	SCREW	8	8					
5	04015-50050	WASHER, PLAIN	8	8					M5
6	T2185-85131	SUPPORT ASSY	1 ~HT8100038	1 ~HT8900076					
6	T2185-85131BB	SUPPORT ASSY	1 HT8100039~	1 JT8900001~				<-X->	
7	01173-51000	BOLT	4	4					M10*P1.25*100
8	04013-50100	WASHER, PLAIN	12	12					M10
9	04512-50100	WASHER, SPRING	8	8					M10
10	02014-50100	NUT	8	8					M10*P1.25
11	T2615-85131	U BOLT	2	2					
11	T2185-85101005	U BOLT	2	2				<----	

----> Old replace New
<-X-> Not interchangeable
<-O-> Interchangeable with another part(s)
<---- New replace Old
<---> Interchangeable

CK30M-T1050A WORKING LIGHT A GROUP

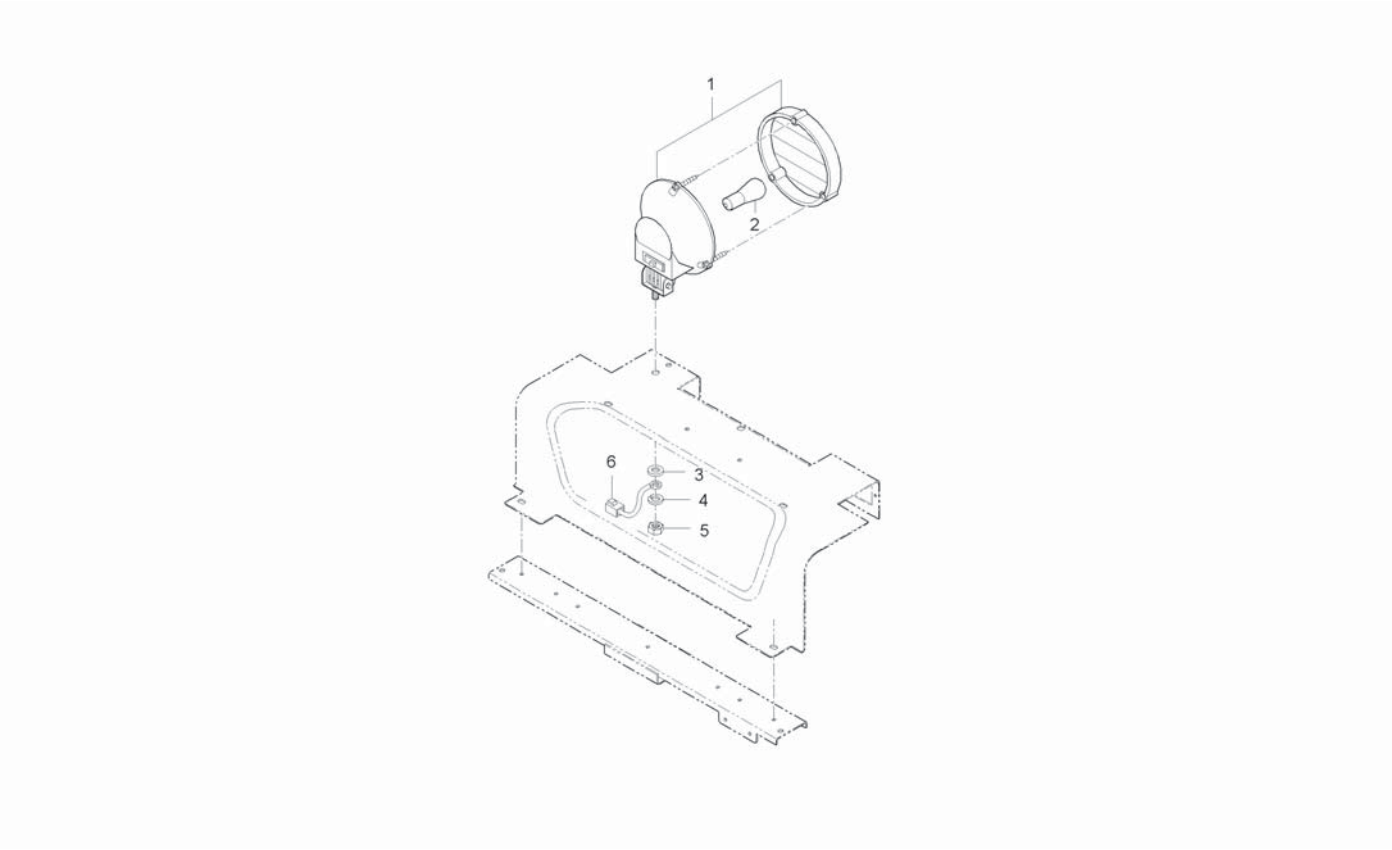

A : CK35-EU , B : CK35H-EU

No.	Part Number	Desciption	Q'TY A	Q'TY B	Q'TY C	Q'TY D	Q'TY E	I.C	Remark
1	T2350-46611	WORKING LIGHT ASSY	1	1					
2	T4620-69272	BULB, 12VX21W	1	1					
3	04013-50080	WASHER	1	1					M8
4	04512-50080	SPRING WASHER	1	1					M08
5	02114-50080	NUT	1	1					M8*P1.25
6	T4620-69362	WIRE HARNESS 1	1	1					

----> Old replace New
<-X-> Not interchangeable
<-O-> Interchangeable with another part(s)
<---- New replace Old
<---> Interchangeable

CK30E-T1055B

MID PTO GROUP

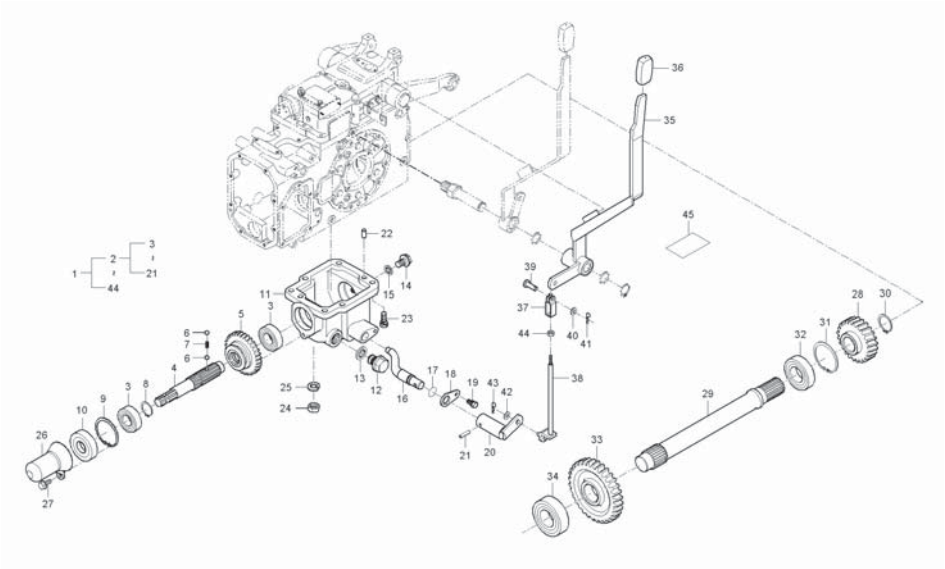

A : CK35-EU , B : CK35H-EU

No.	Part Number	Desciption	Q'TY A	Q'TY B	Q'TY C	Q'TY D	Q'TY E	I.C	Remark
1	T2181-A74000101	ASS'Y, MID PTO		1					
2	T2185-24104	PTO ASSY, MID		1					
3	08101-06205	BALL BEARING		2					DIA25
4	T2185-24122	SHAFT, PTO MID		1					
5	T2185-24161	GEAR, 32 MID PTO		1					
6	07715-01605	STEEL BALL		2					5/16"
7	T2440-44251	SPRING		1					
8	04612-00300	SNAP RING		1					
9	04611-00520	SNAP RING		1					
10	09502-55210	OIL SEAL		1					
11	T2185-24114	CASE, PTO MID		1					
12	06331-35012	PLUG		1					M12*P1.25
13	04717-01200	WASHER, SEAL		1					
14	T4125-14261	PLUG, MAGNET		1					
15	04717-02650	WASHER, SEAL		1					
16	T2185-24232	ARM, SHIFT PTO MID		1					
17	04811-00150	O RING		1					
18	31355-4433-1	STOPPER		1					
19	01123-50816	BOLT, WASHER		1					M8*P1.25

----> Old replace New
<-X-> Not interchangeable
<-O-> Interchangeable with another part(s)
<---- New replace Old
<---> Interchangeable

CK30E-T1055B

MID PTO GROUP

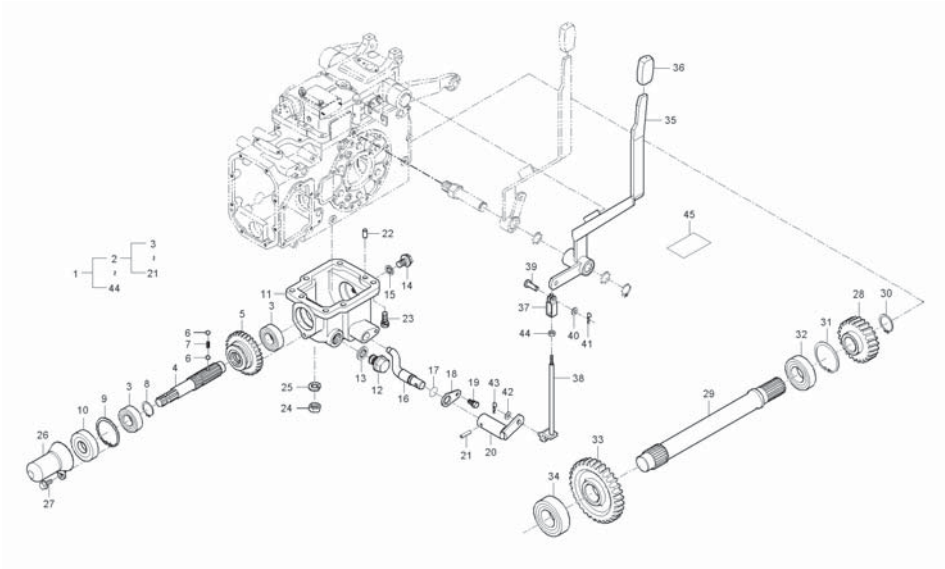

A : CK35-EU , B : CK35H-EU

No.	Part Number	Desciption	Q'TY A	Q'TY B	Q'TY C	Q'TY D	Q'TY E	I.C	Remark
20	T2185-24525	LEVER 1, MID PTO		1					
21	05411-00630	PIN, SPRING		1					DIA6*30
22	05012-01018	PIN, PARALLEL		2					
23	01133-51030	BOLT, WASHER		4					M10*1.25
24	02176-50100	NUT		2					M10X1.25
25	04512-50100	WASHER, SPRING		2					M10
26	T4125-24171	LEVER, MID PTO SHAFT		1					
27	01754-50816	BOLT, FLANGE		1					M8*P1.25
28	T2185-24131	GEAR, 23 MID PTO		1					
29	T2185-24142	SHAFT, COUNTER MID PTO		1					
30	04612-00250	SNAP RING		1					
31	04611-00620	RING, STOPPER		1					
32	08101-06305	BALL BEARING		1					DIA25
33	T2185-24152	GEAR, 31 MID PTO		1					
34	08101-06006	BALL BEARING		1					#6006
35	T2185-24273	LEVER, MID PTO		1					
36	T2350-24251	GRIP B, MID PTO		1					
37	54516-3213-1	HOLDER PLATE, ROD		1					
38	T2185-24562	ROD, CONNECTING PTO MID		1					

----> Old replace New
<-X-> Not interchangeable
<-O-> Interchangeable with another part(s)
<---- New replace Old
<---> Interchangeable

CK30E-T1055B

MID PTO GROUP

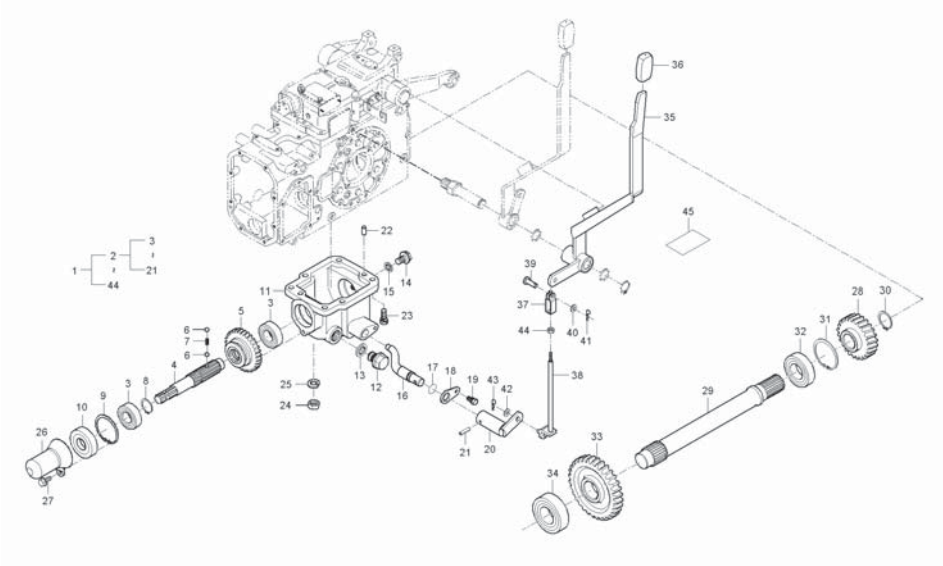

A : CK35-EU , B : CK35H-EU

No.	Part Number	Desciption	Q'TY A	Q'TY B	Q'TY C	Q'TY D	Q'TY E	I.C	Remark
39	05122-50822	JOINT PIN		1					
40	04012-50080	WASHER, PLAIN		1					DIA18*T1.2
41	05525-50800	PIN, SNAP		1					
42	04011-50100	WASHER, PLAIN		1					M10
43	05525-51000	PIN, SNAP		1					
44	02176-50100	NUT		1					M10X1.25
45	T2185-53193	LABEL, MID PTO		1					

----> Old replace New
<-X-> Not interchangeable
<-O-> Interchangeable with another part(s)
<---- New replace Old
<---> Interchangeable

EX40-T1065C FRONT WEIGHT GROUP

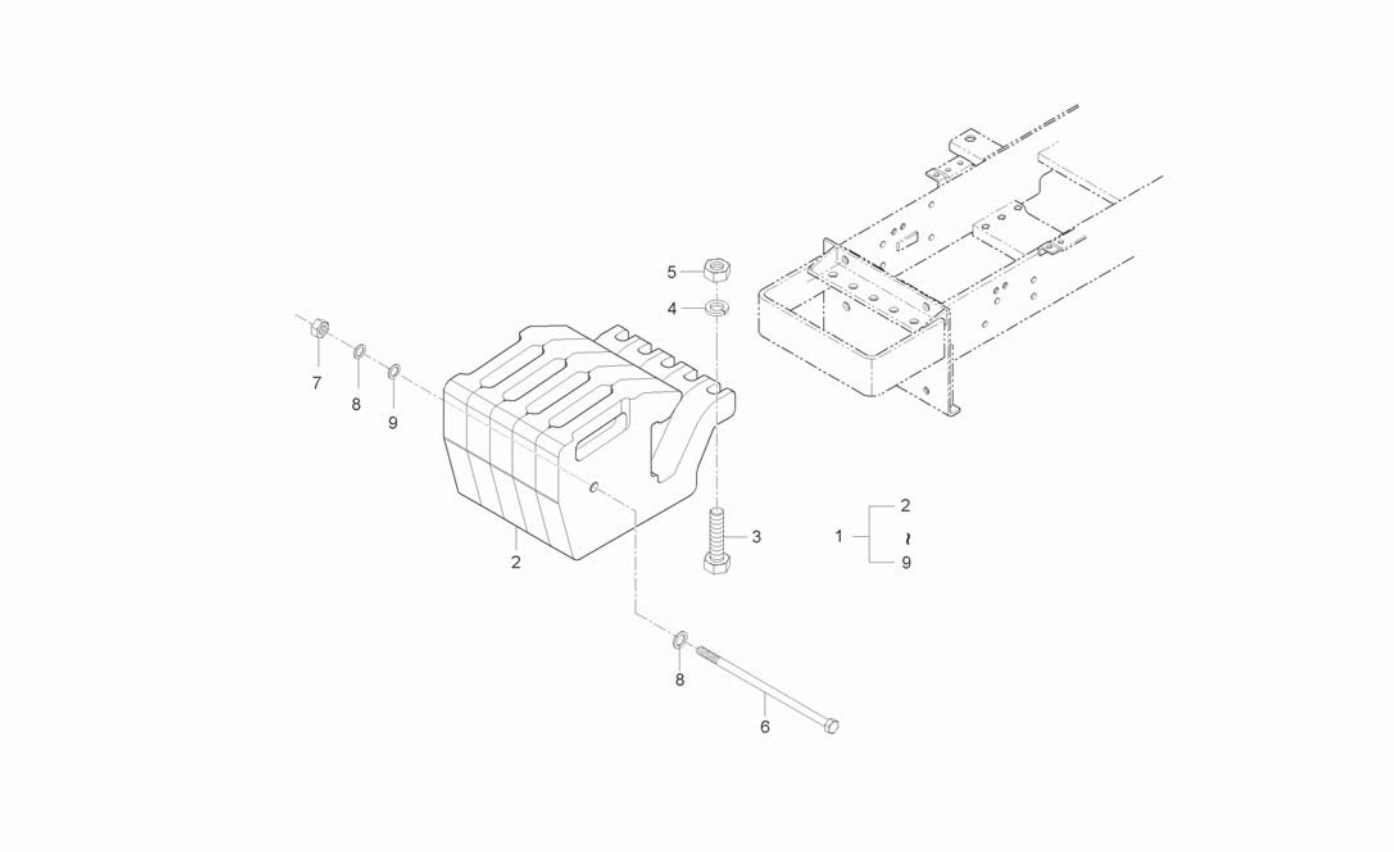

A : CK35-EU , B : CK35H-EU

No.	Part Number	Desciption	Q'TY A	Q'TY B	Q'TY C	Q'TY D	Q'TY E	I.C	Remark
1	T2165-A12000101	FRONT WEIGHT KIT	1	1					
2	T2540-54602	WEIGHT, BALANCE	5	5					
3	01073-51460	BOLT	5	5					
4	04512-50140	WASHER, SPRING	5	5					
5	02176-50140	NUT	5	5					M14*P1.5
6	T2611-44931	BOLT, WEIGHT FR	1	1					
7	02176-50120	NUT	1	1					M12*1.25
8	04512-50120	WASHER, SPRING	1	1					M12
9	04013-50120	WASHER, PLAIN	2	2					M12

----> Old replace New
<-X-> Not interchangeable
<-O-> Interchangeable with another part(s)
<---- New replace Old
<---> Interchangeable

EX40-T1075B

REAR WEIGHT GROUP

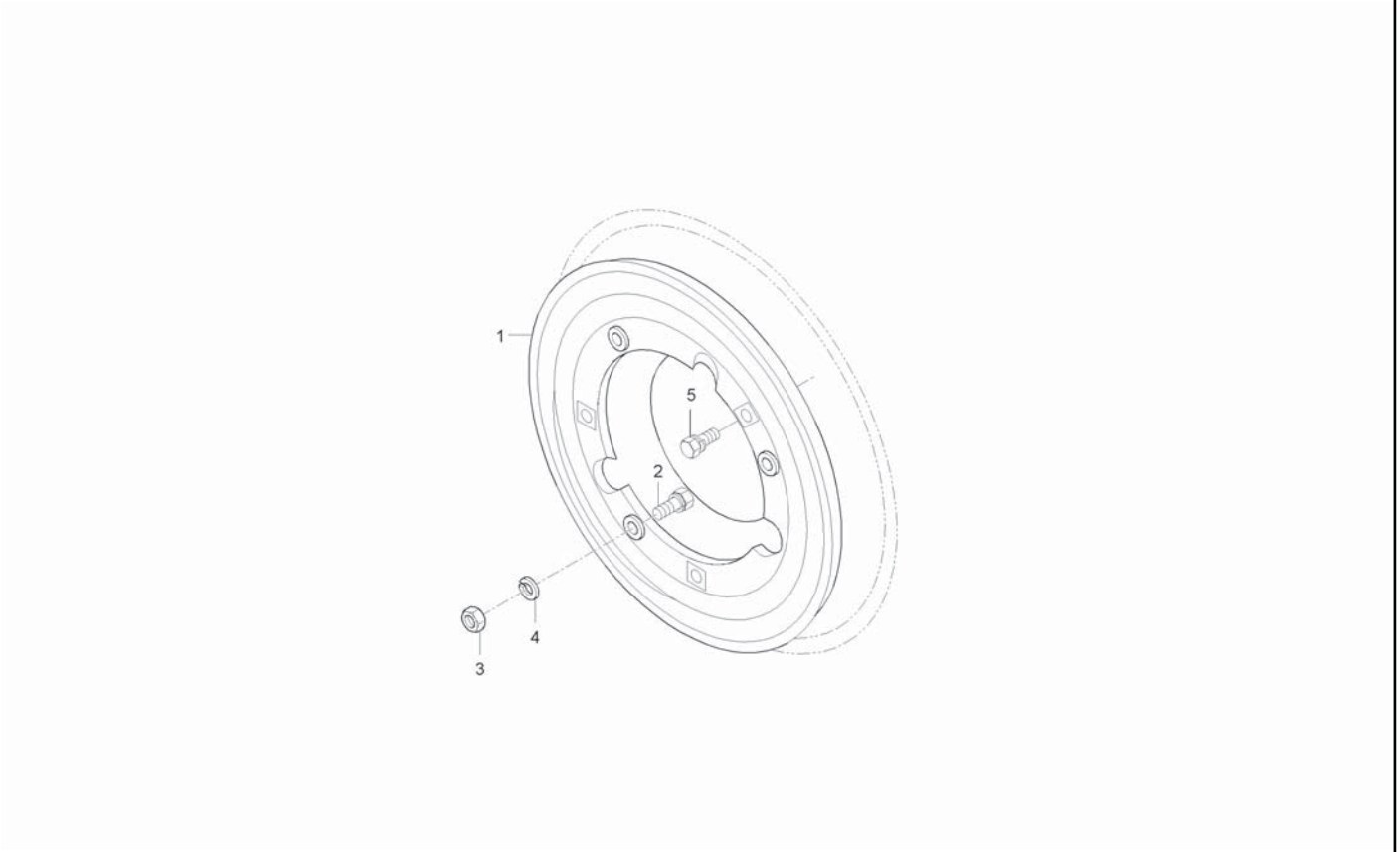

A : CK35-EU , B : CK35H-EU

No.	Part Number	Desciption	Q'TY A	Q'TY B	Q'TY C	Q'TY D	Q'TY E	I.C	Remark
1	T4240-27743	WEIGHT, WHEEL	4	4					
2	99415-1503-1	BOLT, WEIGHT	6	6					
3	02076-50160	NUT	12	12					
4	04512-50160	WASHER, SPRING	12	12					M16
5	99415-1502-2	BOLT	6	6					

----> Old replace New
<-X-> Not interchangeable
<-O-> Interchangeable with another part(s)
<---- New replace Old
<---> Interchangeable

EX40-T1075C

Rear Weights Group(Option)

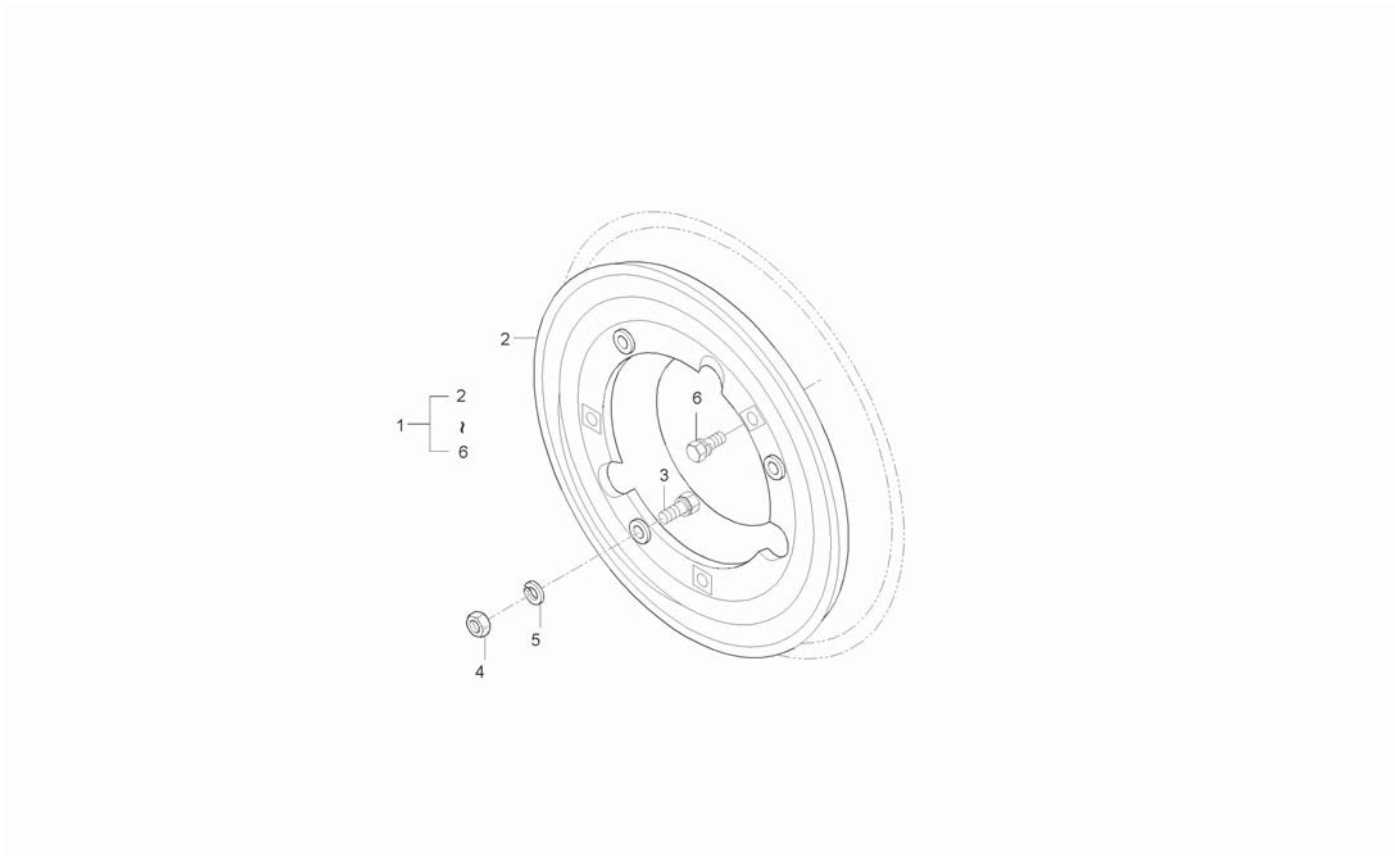

A : CK35-EU , B : CK35H-EU

No.	Part Number	Desciption	Q'TY A	Q'TY B	Q'TY C	Q'TY D	Q'TY E	I.C	Remark
1	T2181-A12000201	WEIGHT,REAR	1	1					
2	T4240-27743	WEIGHT, WHEEL	4	4					
3	99415-1503-1	BOLT, WEIGHT	6	6					
4	02076-50160	NUT	12	12					
5	04512-50160	WASHER, SPRING	12	12					M16
6	99415-1502-2	BOLT	6	6					

----> Old replace New
<-X-> Not interchangeable
<-O-> Interchangeable with another part(s)
<---- New replace Old
<---> Interchangeable

CT230-T1115B

FRONT & REAR WHEEL GROUP

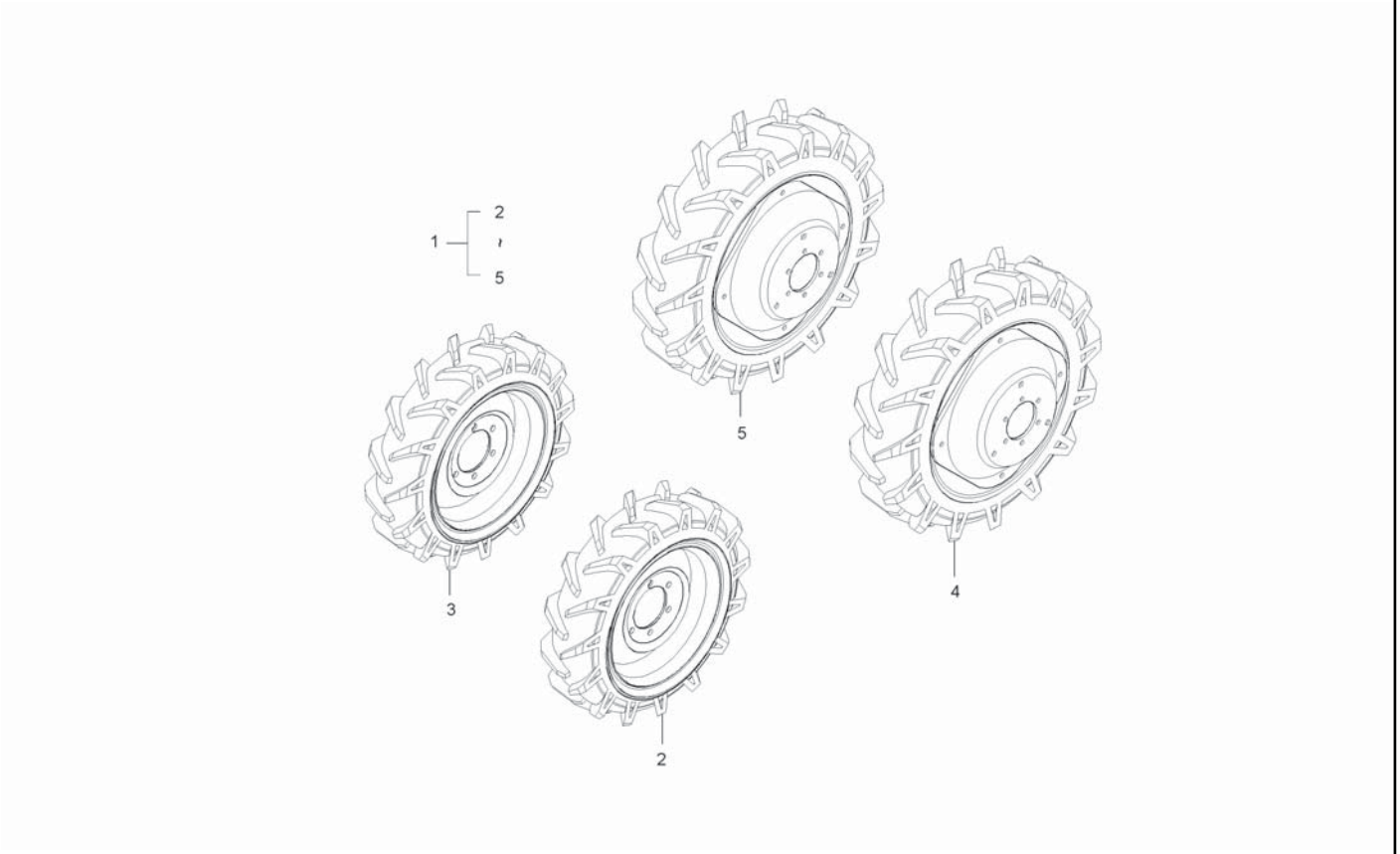

A : CK35-EU , B : CK35H-EU

No.	Part Number	Desciption	Q'TY A	Q'TY B	Q'TY C	Q'TY D	Q'TY E	I.C	Remark
1	T2185-A03000101	TIRE GROUP	1	1					
2	T2185-49401	FRONT WHEEL ASSY, LH	1	1					
3	T2185-49451	FRONT WHEEL ASSY, RH	1	1					
4	T2540-27611	TIRE ASSY, RR LH	1	1					
5	T2540-27711	ASSY WHEEL, REAR LH	1	1					

----> Old replace New
<-X-> Not interchangeable
<-O-> Interchangeable with another part(s)
<---- New replace Old
<---> Interchangeable

CK30E-T2000B

TOWING HOOK GROUP

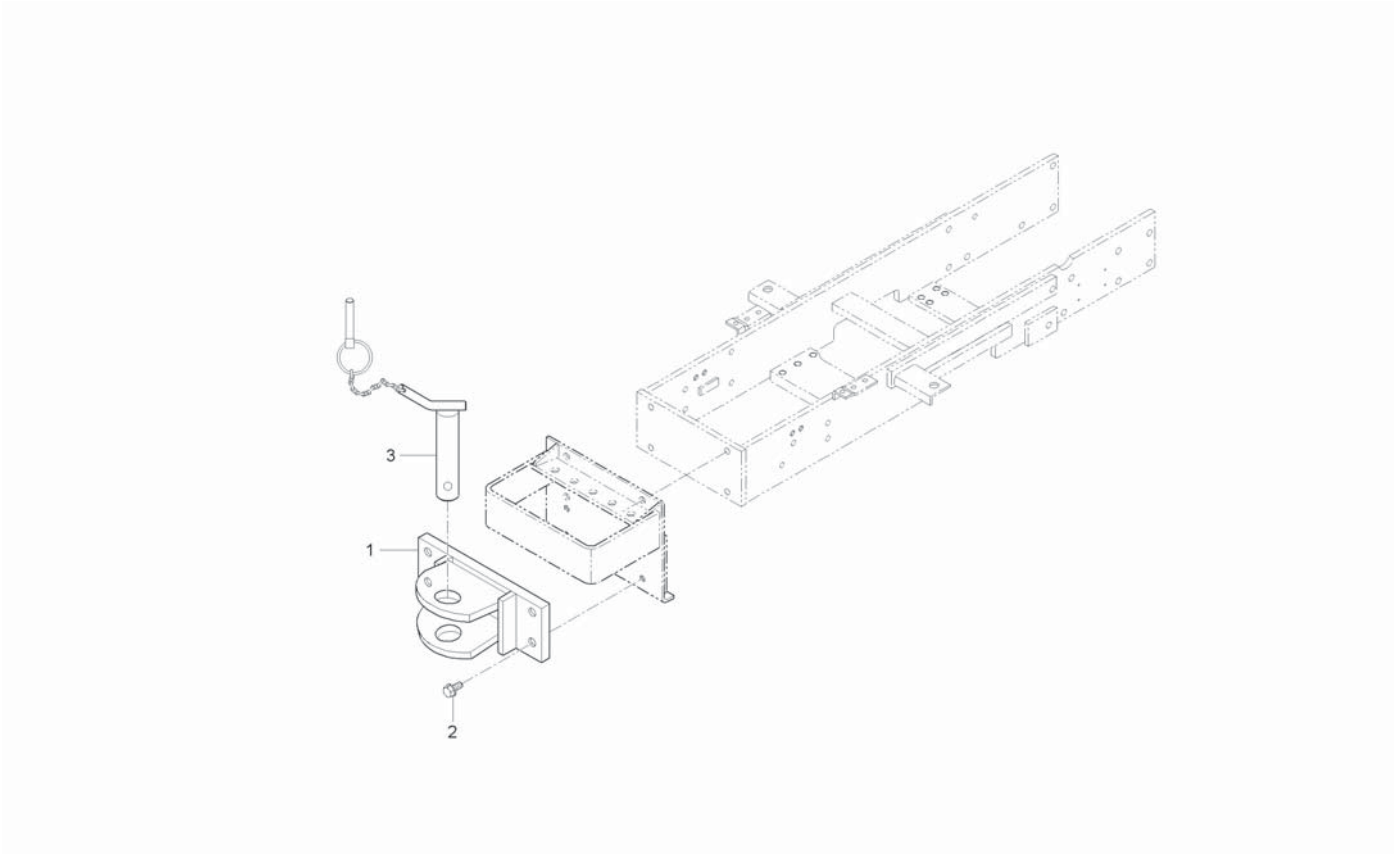

A : CK35-EU , B : CK35H-EU

No.	Part Number	Desciption	Q'TY A	Q'TY B	Q'TY C	Q'TY D	Q'TY E	I.C	Remark
1	T2611-50031	BRACKET, TOWING HOOK		1					
2	01177-51240	BOLT, WASHER		4					M12XP1.25(9T /스프링
3	T2611-50041	PIN, CONNECTING		1					

----> Old replace New
<-X-> Not interchangeable
<-O-> Interchangeable with another part(s)
<---- New replace Old
<---> Interchangeable

INDEX 1

PART NO.	PAGE	PART NO.	PAGE	PART NO.	PAGE	PART NO.	PAGE	PART NO.	PAGE
008264	189	01123-50816	54	01123-50822	221	01125-50820	269	01133-51035	157
008274	350	01123-50816	92	01123-50822	223	01125-50820	272	01133-51035	255
010001080	145	01123-50816	95	01123-50822	225	01125-50820	274	01133-51038	136
01023-50610	133	01123-50816	97	01123-50822	260	01125-50820	276	01133-51038	137
01023-50610	154	01123-50816	99	01123-50825	41	01125-50820	278	01133-51040	64
01023-50612	66	01123-50816	117	01123-50825	50	01125-50820	280	01133-51040	65
01023-50612	68	01123-50816	127	01123-50825	58	01125-50825	216	01133-51040	67
01023-50612	250	01123-50816	129	01123-50825	143	01125-50825	248	01133-51040	78
01023-50612	255	01123-50816	132	01123-50825	158	01125-50825	256	01133-51040	89
01023-50614	98	01123-50816	154	01123-50825	180	01125-50825	257	01133-51040	137
01023-50614	101	01123-50816	187	01123-50825	184	01125-50830	192	01133-51040	293
01023-50614	196	01123-50816	192	01123-50825	194	01127-50825	196	01133-51045	82
01023-50616	29	01123-50816	197	01123-50825	195	01127-50825	248	01133-51045	84
01023-50616	30	01123-50816	199	01123-50828	34	01127-50825	252	01133-51065	61
01023-50616	259	01123-50816	209	01123-50828	35	01127-50825	269	01133-51075	43
01023-50618	29	01123-50816	210	01123-50830	93	01127-50825	271	01133-51220	170
01023-50618	30	01123-50816	222	01123-50830	258	01127-50825	274	01133-51220	174
01023-50618	34	01123-50816	233	01123-50830	329	01127-50825	276	01133-51220	180
01023-50618	35	01123-50816	241	01123-50832	33	01133-51003	136	01133-51220	184
01023-50620	7	01123-50816	244	01123-50832	39	01133-51003	137	01133-51225	98
01023-50620	26	01123-50816	246	01123-50832	40	01133-51016	250	01133-51225	206
01023-50620	28	01123-50816	247	01123-50835	7	01133-51016	254	01133-51225	207
01023-50622	29	01123-50816	250	01123-50835	37	01133-51016	267	01133-51225	208
01023-50622	31	01123-50816	254	01123-50835	38	01133-51018	163	01133-51225	210
01023-50625	329	01123-50816	275	01123-50835	144	01133-51018	166	01133-51225	248
01023-50628	33	01123-50816	277	01123-50835	147	01133-51018	186	01133-51225	252
01023-50650	2	01123-50816	279	01123-50845	157	01133-51018	209	01133-51225	347
01025-50612	154	01123-50816	281	01123-50850	160	01133-51018	229	01133-51235	42
01025-50616	222	01123-50816	352	01123-50850	162	01133-51020	153	01133-51240	16
01025-50616	224	01123-50816	356	01123-50855	143	01133-51020	159	01133-51240	18
01025-50616	239	01123-50818	12	01123-50860	7	01133-51020	161	01133-51245	248
01025-50616	251	01123-50818	13	01123-50870	7	01133-51020	164	01133-51245	252
01025-50616	255	01123-50818	90	01123-50870	37	01133-51020	165	01133-51260	122
01025-50616	261	01123-50818	278	01123-50870	38	01133-51020	168	01133-51260	126
01025-50620	239	01123-50818	280	01123-50875	7	01133-51020	219	01135-51020	150
01025-50620	256	01123-50820	67	01123-50880	56	01133-51020	250	01135-51020	153
01025-50620	264	01123-50820	99	01123-50880	181	01133-51020	255	01135-51020	267
01025-50620	265	01123-50820	158	01123-50880	185	01133-51022	252	01150-50820	327
01025-50620	266	01123-50820	159	01123-50885	7	01133-51025	104	01153-50802	7
01027-50614	216	01123-50820	161	01123-51020	203	01133-51025	248	01153-50850	160
01053-50625	250	01123-50820	163	01123-51030	250	01133-51025	252	01153-50880	56
01053-50625	255	01123-50820	165	01123-51030	255	01133-51028	250	01153-50880	171
01053-50640	143	01123-50820	170	01123-51035	144	01133-51028	255	01153-50880	175
01073-51460	359	01123-50820	174	01123-51230	324	01133-51030	17	01173-51000	354
01073-51630	344	01123-50820	187	01125-50816	168	01133-51030	18	01173-51005	39
01073-51630	346	01123-50820	194	01125-50816	196	01133-51030	105	01173-51005	40
01123-50802	7	01123-50820	203	01125-50816	246	01133-51030	117	01173-51030	221
01123-50812	102	01123-50820	257	01125-50816	247	01133-51030	136	01173-51030	223
01123-50812	103	01123-50820	282	01125-50816	269	01133-51030	137	01173-51225	347
01123-50814	22	01123-50820	299	01125-50816	272	01133-51030	225	01173-51225	348
01123-50814	24	01123-50820	301	01125-50816	274	01133-51030	357	01173-51265	109
01123-50814	101	01123-50820	305	01125-50816	277	01133-51032	67	01173-51265	111
01123-50814	118	01123-50820	307	01125-50816	282	01133-51032	95	01173-51265	113
01123-50816	4	01123-50822	22	01125-50820	159	01133-51032	238	01173-51270	109
01123-50816	5	01123-50822	24	01125-50820	161	01133-51035	62	01173-51270	111
01123-50816	16	01123-50822	37	01125-50820	163	01133-51035	63	01173-51270	113
01123-50816	18	01123-50822	38	01125-50820	165	01133-51035	86	01173-51430	267
01123-50816	51	01123-50822	41	01125-50820	195	01133-51035	87	01173-51435	209
01123-50816	52	01123-50822	148	01125-50820	257	01133-51035	88	01173-51435	210
01123-50816	53	01123-50822	151	01125-50820	267	01133-51035	115	01173-51435	294

PART NO.	PAGE	PART NO.	PAGE	PART NO.	PAGE	PART NO.	PAGE	PART NO.	PAGE
01173-51440	47	01574-51225	50	01754-50830	33	02114-50080	322	02176-50100	126
01173-51470	324	01574-51230	209	01754-50830	334	02114-50080	327	02176-50100	127
01173-51490	324	01574-51230	210	01754-50835	37	02114-50080	329	02176-50100	129
01173-51600	324	01574-51240	109	01754-50835	38	02114-50080	332	02176-50100	136
01173-51635	344	01574-51240	111	01754-50870	38	02114-50080	342	02176-50100	137
01173-51635	345	01574-51240	113	01774-51016	267	02114-50080	355	02176-50100	191
01173-51635	346	01574-51285	109	01774-51020	240	02114-50100	118	02176-50100	213
01173-51690	293	01574-51285	111	01774-51020	243	02114-50100	214	02176-50100	217
01173-51690	324	01574-51285	113	01811-50612	199	02116-50100	99	02176-50100	230
01175-51250	132	01654-50820	3	02014-50060	142	02116-50100	129	02176-50100	358
01176-51235	221	01654-50830	8	02014-50100	354	02118-50100	144	02176-50120	109
01176-51235	223	01674-51032	3	02054-50030	300	02156-50080	4	02176-50120	111
01176-51235	227	01674-51032	16	02054-50040	257	02156-50080	5	02176-50120	113
01176-51240	294	01674-51032	18	02054-50040	297	02156-50080	17	02176-50120	209
01176-51675	238	01754-50610	304	02054-50040	298	02156-50080	18	02176-50120	210
01177-51035	62	01754-50610	307	02054-50040	300	02156-50080	22	02176-50120	228
01177-51035	63	01754-50612	226	02054-50040	302	02156-50080	24	02176-50120	264
01177-51045	65	01754-50612	299	02054-50040	316	02156-50080	34	02176-50120	265
01177-51065	61	01754-50612	301	02054-50040	319	02156-50080	35	02176-50120	266
01177-51235	225	01754-50612	307	02054-50040	322	02156-50080	37	02176-50120	325
01177-51235	227	01754-50612	319	02054-50040	333	02156-50080	38	02176-50120	347
01177-51240	363	01754-50612	322	02054-50050	39	02156-50080	56	02176-50120	348
01202-50612	237	01754-50616	31	02054-50050	40	02156-50080	101	02176-50120	359
01513-50614	29	01754-50616	226	02056-50060	7	02156-50080	148	02176-50140	108
01513-50614	31	01754-50616	319	02056-50060	23	02156-50080	151	02176-50140	112
01513-50616	305	01754-50616	322	02056-50060	25	02156-50080	157	02176-50140	294
01513-50618	23	01754-50620	26	02056-50060	27	02156-50080	167	02176-50140	359
01513-50618	25	01754-50620	31	02056-50060	34	02156-50080	212	02176-50160	278
01513-50620	7	01754-50620	39	02056-50060	35	02156-50080	270	02176-50160	280
01513-50822	4	01754-50620	40	02056-50060	154	02156-50080	273	02176-50160	324
01513-50822	5	01754-50620	329	02056-50060	155	02156-50080	275	02751-50060	27
01513-50822	22	01754-50625	198	02056-50060	204	02156-50080	277	02751-50060	31
01513-50822	24	01754-50625	223	02056-50060	231	02156-50080	317	02751-50060	259
01513-50822	37	01754-50625	225	02056-50060	295	02172-50120	201	02751-50060	299
01513-50822	38	01754-50812	296	02072-50140	173	02172-50120	202	02751-50060	301
01513-50822	41	01754-50812	341	02072-50140	177	02172-50160	227	02751-50060	305
01513-50822	157	01754-50812	342	02072-50140	179	02174-50120	261	02751-50060	307
01513-50880	56	01754-50816	16	02072-50140	183	02174-50120	263	02751-50060	329
01517-51028	17	01754-50816	18	02074-50120	293	02174-50120	353	02751-50060	336
01517-51028	18	01754-50816	117	02076-50120	132	02174-50140	108	02751-50060	341
01517-51030	62	01754-50816	270	02076-50160	238	02174-50140	110	02751-50060	342
01517-51030	67	01754-50816	271	02076-50160	344	02174-50160	51	02751-50080	41
01517-51030	86	01754-50816	275	02076-50160	360	02174-50160	133	02751-50080	192
01517-51030	87	01754-50816	277	02076-50160	361	02174-50180	234	02751-50080	318
01517-51030	96	01754-50816	279	02112-50080	18	02176-50100	17	02751-50080	321
01517-51035	64	01754-50816	281	02112-50080	204	02176-50100	19	02751-50080	335
01517-51035	65	01754-50816	282	02112-50080	212	02176-50100	39	02751-50080	341
01517-51035	67	01754-50816	284	02114-50060	250	02176-50100	40	02761-50040	316
01517-51035	114	01754-50816	296	02114-50060	255	02176-50100	55	02761-50060	26
01517-51035	136	01754-50816	357	02114-50060	331	02176-50100	61	02761-50060	29
01517-51035	137	01754-50820	12	02114-50060	343	02176-50100	62	02761-50060	31
01517-51040	67	01754-50820	13	02114-50080	141	02176-50100	64	02761-50060	305
01517-51050	136	01754-50820	37	02114-50080	156	02176-50100	65	02763-50080	4
01517-51050	137	01754-50820	38	02114-50080	157	02176-50100	67	02763-50080	37
01517-51055	122	01754-50820	197	02114-50080	201	02176-50100	86	02763-50080	38
01517-51055	126	01754-50820	200	02114-50080	202	02176-50100	87	03004-50616	205
01517-51060	61	01754-50825	258	02114-50080	204	02176-50100	96	03014-50625	343
01517-51632	115	01754-50825	319	02114-50080	261	02176-50100	115	03014-50630	333
01518-50822	34	01754-50825	322	02114-50080	273	02176-50100	117	03024-50412	316
01518-50822	35	01754-50825	330	02114-50080	319	02176-50100	122	03024-50414	297

PART NO.	PAGE	PART NO.	PAGE	PART NO.	PAGE	PART NO.	PAGE	PART NO.	PAGE
03024-50414	298	04013-50040	319	04013-50100	354	04512-50080	154	04512-50140	110
03024-50420	343	04013-50040	322	04013-50120	234	04512-50080	157	04512-50140	112
03024-50510	10	04013-50040	330	04013-50120	261	04512-50080	167	04512-50140	209
03024-50510	11	04013-50040	333	04013-50120	263	04512-50080	171	04512-50140	211
03024-50512	309	04013-50060	106	04013-50120	324	04512-50080	175	04512-50140	267
03024-50512	312	04013-50060	107	04013-50120	359	04512-50080	180	04512-50140	293
03024-50514	98	04013-50060	205	04013-50160	324	04512-50080	184	04512-50140	294
03024-50514	206	04013-50060	241	04014-50060	142	04512-50080	204	04512-50140	324
03024-50514	207	04013-50060	244	04014-50060	221	04512-50080	212	04512-50140	359
03024-50516	205	04013-50060	262	04014-50060	224	04512-50080	270	04512-50160	238
03024-50520	20	04013-50060	263	04014-50060	225	04512-50080	273	04512-50160	324
03027-50516	310	04013-50060	329	04014-50100	8	04512-50080	275	04512-50160	344
03027-50516	312	04013-50060	331	04014-50100	213	04512-50080	277	04512-50160	345
03054-50316	300	04013-50060	333	04014-50180	234	04512-50080	317	04512-50160	346
03054-50416	330	04013-50060	343	04015-50050	354	04512-50080	319	04512-50160	360
03054-50416	333	04013-50080	56	04015-50060	187	04512-50080	322	04512-50160	361
03054-50420	319	04013-50080	98	04015-50060	273	04512-50080	327	04512-50180	234
03054-50420	322	04013-50080	150	04015-50060	295	04512-50080	332	04611-00400	249
03054-50420	333	04013-50080	154	04015-50080	39	04512-50080	342	04611-00400	254
03054-50420	335	04013-50080	171	04015-50080	40	04512-50080	355	04611-00470	80
03054-50525	300	04013-50080	175	04015-50100	293	04512-50100	17	04611-00470	90
03054-50525	301	04013-50080	181	04015-50140	108	04512-50100	19	04611-00470	91
03054-50540	352	04013-50080	185	04015-50140	110	04512-50100	39	04611-00520	80
03054-50614	332	04013-50080	186	04015-50140	112	04512-50100	40	04611-00520	81
04011-50100	141	04013-50080	204	04111-50060	92	04512-50100	61	04611-00520	85
04011-50100	150	04013-50080	206	04111-50060	93	04512-50100	62	04611-00520	90
04011-50100	154	04013-50080	207	04512-50030	300	04512-50100	64	04611-00520	91
04011-50100	358	04013-50080	215	04512-50040	257	04512-50100	65	04611-00520	116
04011-50120	233	04013-50080	218	04512-50040	300	04512-50100	67	04611-00520	356
04011-50120	262	04013-50080	248	04512-50040	301	04512-50100	86	04611-00620	86
04011-50120	353	04013-50080	253	04512-50040	318	04512-50100	87	04611-00620	117
04011-50140	94	04013-50080	262	04512-50040	321	04512-50100	96	04611-00620	357
04011-50160	293	04013-50080	270	04512-50040	333	04512-50100	115	04611-00720	45
04011-50180	6	04013-50080	272	04512-50050	39	04512-50100	117	04611-00720	47
04011-50180	98	04013-50080	275	04512-50050	40	04512-50100	122	04611-00720	49
04011-50180	101	04013-50080	277	04512-50050	352	04512-50100	126	04611-00720	77
04011-50180	102	04013-50080	305	04512-50060	7	04512-50100	136	04611-00720	78
04011-50180	206	04013-50080	308	04512-50060	23	04512-50100	137	04611-00720	83
04011-50180	207	04013-50080	317	04512-50060	25	04512-50100	221	04611-00720	88
04011-50180	212	04013-50080	319	04512-50060	34	04512-50100	223	04611-00800	48
04011-50200	208	04013-50080	322	04512-50060	35	04512-50100	268	04611-00800	74
04011-50200	210	04013-50080	327	04512-50060	154	04512-50100	354	04611-00850	114
04011-50200	215	04013-50080	330	04512-50060	231	04512-50100	357	04612-00100	154
04011-50200	218	04013-50080	332	04512-50060	343	04512-50120	109	04612-00120	249
04011-50220	233	04013-50080	333	04512-50080	4	04512-50120	111	04612-00120	253
04012-50040	257	04013-50080	335	04512-50080	5	04512-50120	113	04612-00120	262
04012-50050	39	04013-50080	349	04512-50080	7	04512-50120	209	04612-00150	142
04012-50050	40	04013-50080	355	04512-50080	17	04512-50120	210	04612-00160	140
04012-50050	310	04013-50100	39	04512-50080	18	04512-50120	221	04612-00160	143
04012-50050	312	04013-50100	40	04512-50080	23	04512-50120	223	04612-00170	249
04012-50060	33	04013-50100	201	04512-50080	24	04512-50120	228	04612-00170	254
04012-50080	33	04013-50100	202	04512-50080	34	04512-50120	264	04612-00180	98
04012-50080	56	04013-50100	213	04512-50080	35	04512-50120	265	04612-00180	101
04012-50080	57	04013-50100	215	04512-50080	37	04512-50120	266	04612-00180	206
04012-50080	58	04013-50100	217	04512-50080	38	04512-50120	294	04612-00180	207
04012-50080	118	04013-50100	219	04512-50080	54	04512-50120	347	04612-00180	212
04012-50080	156	04013-50100	221	04512-50080	56	04512-50120	348	04612-00190	9
04012-50080	219	04013-50100	241	04512-50080	101	04512-50120	359	04612-00200	79
04012-50080	358	04013-50100	244	04512-50080	128	04512-50140	47	04612-00200	144
04012-50100	118	04013-50100	335	04512-50080	150	04512-50140	108	04612-00200	208

PART NO.	PAGE	PART NO.	PAGE	PART NO.	PAGE	PART NO.	PAGE	PART NO.	PAGE
04612-00200	210	04717-01600	183	04811-00160	97	05012-01018	88	05411-00532	237
04612-00200	215	04717-01700	222	04811-00160	103	05012-01018	89	05411-00535	96
04612-00200	218	04717-02150	42	04811-00160	140	05012-01018	95	05411-00620	92
04612-00220	165	04717-02150	109	04811-00160	258	05012-01018	117	05411-00622	236
04612-00220	186	04717-02150	111	04811-00180	6	05012-01018	357	05411-00622	249
04612-00220	209	04717-02150	112	04811-00180	108	05012-01020	47	05411-00622	254
04612-00220	349	04717-02650	64	04811-00180	110	05012-01020	62	05411-00625	93
04612-00240	22	04717-02650	86	04811-00180	112	05012-01020	63	05411-00625	97
04612-00240	24	04717-02650	87	04811-00200	95	05012-01020	64	05411-00625	144
04612-00250	52	04717-02650	116	04811-00200	102	05012-01020	65	05411-00628	150
04612-00250	53	04717-02650	356	04811-00200	103	05012-01020	67	05411-00630	92
04612-00250	80	04724-00140	28	04811-00200	349	05012-01025	16	05411-00630	95
04612-00250	86	04724-00140	30	04811-00210	143	05012-01025	18	05411-00630	97
04612-00250	90	04724-00180	142	04811-00220	6	05012-01025	61	05411-00630	102
04612-00250	91	04810-00120	138	04811-00250	143	05112-50825	219	05411-00630	103
04612-00250	117	04810-00120	139	04811-00320	159	05112-50840	57	05411-00630	117
04612-00250	157	04810-00140	131	04811-00320	165	05112-50840	58	05411-00630	204
04612-00250	214	04810-00160	163	04811-00360	6	05112-50845	204	05411-00630	349
04612-00250	217	04810-00160	167	04811-00420	52	05112-50855	332	05411-00630	357
04612-00250	249	04810-00180	158	04811-00420	53	05122-50614	221	05411-00632	99
04612-00250	254	04810-00180	167	04811-00490	42	05122-50614	224	05411-00632	127
04612-00250	357	04810-00180	170	04811-00490	227	05122-50614	225	05411-00635	52
04612-00280	203	04810-00180	174	04811-06250	138	05122-50635	205	05411-00635	53
04612-00280	249	04810-00180	180	04811-06350	52	05122-50645	241	05411-00635	99
04612-00280	254	04810-00180	184	04811-06350	53	05122-50645	244	05411-00635	106
04612-00300	76	04810-00200	131	04811-06420	59	05122-50822	118	05411-00635	107
04612-00300	78	04810-00200	160	04811-06420	60	05122-50822	358	05411-00635	130
04612-00300	86	04810-00200	164	04811-10110	66	05122-50825	99	05411-00635	140
04612-00300	90	04810-00200	165	04811-10110	68	05122-50825	127	05411-00636	78
04612-00300	91	04810-00200	169	04811-10290	258	05122-50825	129	05411-00636	80
04612-00300	116	04810-00200	170	04811-10300	15	05122-50825	156	05411-00636	90
04612-00300	356	04810-00200	175	04811-10800	157	05122-50825	215	05411-00636	91
04612-00340	69	04810-00200	180	04811-10850	157	05122-50828	215	05411-00840	214
04612-00350	73	04810-00200	184	04811-11100	48	05122-50828	218	05411-00840	217
04612-00400	70	04810-00200	186	04811-50250	72	05122-50865	262	05411-00840	219
04612-00400	71	04810-00200	208	04811-50300	10	05122-51025	201	05411-00850	139
04612-00450	139	04810-00220	134	04811-50300	229	05122-51025	202	05511-50125	219
04612-00500	48	04810-00220	135	04811-50650	258	05122-51025	219	05511-50215	99
04612-50120	156	04810-00220	160	04811-50850	227	05122-51025	241	05511-50215	127
04613-50060	141	04810-00220	162	04811-51000	115	05122-51025	244	05511-50215	129
04613-50060	150	04810-00220	163	04811-51050	47	05122-51028	215	05511-50215	150
04613-50060	153	04810-00220	167	04814-06310	29	05122-51028	217	05511-50215	153
04613-50060	327	04810-00320	159	04814-06310	31	05122-51050	240	05511-50215	187
04613-50060	332	04810-00320	161	05012-00408	1	05122-51050	243	05511-50215	273
04613-50070	140	04810-00320	163	05012-00408	8	05122-51055	221	05511-50218	204
04613-50070	144	04810-00800	139	05012-00510	70	05122-51250	233	05511-50218	216
04613-50100	330	04811-00060	28	05012-00530	69	05411-00325	93	05511-50218	218
04717-00500	153	04811-00060	30	05012-00609	1	05411-00325	216	05511-50220	57
04717-01000	42	04811-00110	135	05012-00612	1	05411-00335	96	05511-50220	58
04717-01000	49	04811-00120	143	05012-00612	6	05411-00420	26	05511-50318	201
04717-01000	59	04811-00120	153	05012-00818	58	05411-00420	28	05511-50318	202
04717-01000	60	04811-00150	6	05012-00818	93	05411-00420	30	05511-50318	215
04717-01000	72	04811-00150	116	05012-00818	122	05411-00420	237	05511-50318	217
04717-01000	138	04811-00150	356	05012-00818	126	05411-00422	232	05511-50320	148
04717-01200	3	04811-00160	3	05012-01018	1	05411-00425	204	05511-50320	151
04717-01200	116	04811-00160	57	05012-01018	43	05411-00522	248	05511-50320	191
04717-01200	139	04811-00160	58	05012-01018	68	05411-00522	253	05511-50320	221
04717-01200	356	04811-00160	67	05012-01018	78	05411-00525	93	05511-50320	230
04717-01400	139	04811-00160	92	05012-01018	82	05411-00525	353	05511-50325	51
04717-01600	179	04811-00160	95	05012-01018	84	05411-00528	79	05511-50325	191

PART NO.	PAGE	PART NO.	PAGE	PART NO.	PAGE	PART NO.	PAGE	PART NO.	PAGE
05511-50325	219	06311-75018	1	08101-06207	50	09318-88080	20	110001110	145
05511-50325	246	06311-75045	1	08101-06207	73	09318-88180	10	110001160	145
05511-50325	247	06311-75045	236	08101-06207	78	09318-88180	11	110002062	147
05511-50335	51	06331-35010	49	08101-06207	81	09318-88180	37	110003040	145
05511-50335	133	06331-35010	59	08101-06207	83	09318-88180	38	110003150	145
05511-50425	191	06331-35010	60	08101-06207	114	09318-89022	171	110004040	147
05511-50430	233	06331-35012	3	08101-06208	71	09318-89022	175	110004080	145
05511-50445	233	06331-35012	116	08101-06208	76	09318-89022	181	110004090	145
05511-51615	155	06331-35012	356	08101-06209	114	09318-89022	185	110005040	145
05511-51615	222	06331-45010	42	08101-06210	114	09318-89045	199	110006032	145
05511-51615	224	06611-15675	132	08101-06212	43	09318-89048	199	110009032	145
05511-51615	226	06611-15675	216	08101-06305	75	09500-16287	93	110011020	145
05515-50080	253	06611-15675	218	08101-06305	81	09500-16287	106	110012020	146
05515-50800	156	06611-15675	219	08101-06305	83	09500-16287	107	110053004	145
05515-50800	231	06613-10010	51	08101-06305	86	09500-25408	90	110083004	145
05515-50800	248	06613-10010	132	08101-06305	117	09500-45609	139	14911-4275-1	197
05515-50800	253	06613-10010	143	08101-06305	357	09502-55210	91	14911-4275-1	228
05515-51000	241	06613-10010	227	08101-06306	50	09502-55210	116	14911-4275-1	259
05515-51000	244	06613-10675	236	08101-06306	78	09502-55210	356	14971-4275-1	20
05515-51200	234	07715-00805	108	08101-06307	74	09503-86211	71	14971-4275-1	259
05515-51600	94	07715-00805	110	08101-06907	72	09661-40300	20	15021-1424-1	9
05515-51600	232	07715-00805	112	08121-06002	14	09661-60030	246	15021-3366-1	1
05515-51600	237	07715-01605	90	08141-06005	90	09661-60030	247	15108-5728-4	27
05525-50060	241	07715-01605	91	08141-06203	249	09661-80300	258	15108-7287-3	197
05525-50060	244	07715-01605	92	08141-06203	254	09661-80370	258	15108-7287-3	199
05525-50080	262	07715-01605	93	08151-06305	81	09661-80450	259	15109-7336-4	197
05525-50600	205	07715-01605	95	08151-06305	85	100010	123	15121-5385-2	20
05525-50600	262	07715-01605	97	08153-06205	22	100011	123	15221-0175-1	4
05525-50600	263	07715-01605	116	08153-06205	24	100012	123	15221-0175-1	5
05525-50800	98	07715-01605	356	08240-00001	22	100013	123	15221-0337-3	4
05525-50800	101	07715-03213	7	08240-00001	24	100014	123	15221-0337-3	5
05525-50800	118	07811-10820	27	08241-05205	157	100015	123	15221-0338-3	1
05525-50800	186	07918-00001	27	08490-00001	57	100016H	123	15221-0339-2	1
05525-50800	204	08101-06005	80	08511-01615	138	100017	123	15221-0349-3	4
05525-50800	206	08101-06005	90	08511-01715	100	100018	123	15221-0349-3	5
05525-50800	207	08101-06005	91	08511-01825	213	100019	123	15221-1324-2	9
05525-50800	212	08101-06006	70	08511-02030	57	100020	123	15221-1632-1	22
05525-50800	270	08101-06006	86	08511-02030	58	100023	123	15221-1632-1	24
05525-50800	272	08101-06006	117	08511-02030	99	100024	124	15221-2336-1	15
05525-50800	275	08101-06006	357	08511-02030	127	100025	124	15221-3361-1	1
05525-50800	277	08101-06007	73	08511-02030	129	100026	124	15221-3365-1	1
05525-50800	349	08101-06008	71	08511-02520	57	100027	124	15221-3375-2	3
05525-50800	358	08101-06009	105	08511-04530	138	100028	124	15221-6382-4	16
05525-51000	118	08101-06010	48	08511-04540	138	100029	124	15221-6382-4	18
05525-51000	208	08101-06010	105	08511-05040	138	100030	124	15221-8821-1	26
05525-51000	210	08101-06012	48	08711-30306	45	100031	124	15221-8821-1	29
05525-51000	213	08101-06204	79	08811-62216	140	100032	124	15221-8821-1	31
05525-51000	358	08101-06205	76	08822-02617	75	100033	124	15221-8821-1	34
05624-20408	285	08101-06205	80	08822-02620	79	100034	124	15221-8821-1	35
05624-20408	289	08101-06205	81	08822-53013	70	100035	124	15241-3695-2	6
05712-00410	2	08101-06205	84	08822-53017	73	100051	125	15241-5214-1	23
05712-00525	22	08101-06205	86	08822-53017	248	100052	125	15271-4271-1	259
05712-00525	24	08101-06205	90	08822-53017	252	100053	125	15291-0456-2	8
05712-00720	12	08101-06205	91	08822-53020	72	100054	125	15301-7242-0	197
05712-00720	13	08101-06205	116	08822-53020	78	100056	125	15301-7244-0	197
05712-00720	15	08101-06205	356	08823-54027	74	100058	125	15301-7245-0	197
05712-00720	39	08101-06206	76	08824-04527	81	100104	125	15301-7247-0	197
05712-00720	40	08101-06206	81	08824-04527	83	100811	125	15301-7247-0	200
06311-45030	221	08101-06207	47	08824-04718	71	102020058	173	15301-7247-0	228
06311-55010	138	08101-06207	48	08824-55017	71	102020058	177	15381-5203-0	23

PART NO.	PAGE	PART NO.	PAGE	PART NO.	PAGE	PART NO.	PAGE	PART NO.	PAGE
15471-2331-1	15	300011	124	32210-2758-1	224	36001-0049	178	36001-0180	172
15471-5798-1	26	300012	124	32210-2758-1	226	36001-0049	182	36001-0180	176
15471-5798-1	28	300013	124	32240-7121-4	232	36001-0050	173	36001-0180	179
15471-5798-1	30	300014	124	32240-7122-4	232	36001-0050	177	36001-0180	183
15471-9536-1	157	300016	125	32244-7118-1	232	36001-0050	179	36001-0210	172
15475-6024-2	303	300017000	189	32244-7167-1	236	36001-0050	183	36001-0210	177
15475-6024-2	306	300024	125	32294-7177-1	236	36001-0054	178	36001-0330	179
15521-0468-2	16	300025	125	32350-2898-4	214	36001-0054	182	36001-0330	183
15521-0468-2	18	300026	125	32350-2898-4	217	36001-0055	178	360011000	145
15521-0479-2	16	300027	125	32353-7189-3	234	36001-0055	182	360011000	190
15521-0479-2	18	300043	125	32O1-12024	149	36001-0058	178	36001-1063	178
15521-1651-1	12	300070000	189	32O1-12024	152	36001-0058	182	36001-1063	182
15521-1651-1	13	300090000	190	32O1-P10A	149	36001-0060	173	36001-1069	178
15521-2353-1	15	300091000	189	32O1-P10A	153	36001-0060	177	36001-1069	182
15521-3229-1	6	300093000	146	34150-1283-1	51	36001-0060	179	360013000	189
15521-5426-1	28	300129000	146	34150-1283-1	133	36001-0060	183	360037000	189
15521-5426-1	30	300180000	146	34150-1426-1	42	36001-0062	178	360046000	190
15521-7299-2	197	310001000	146	34150-1426-1	109	36001-0062	182	360047000	189
15521-7332-1	7	310003000	146	34150-1426-1	111	36001-0063	178	360049000	190
15521-9402-1	8	310006000	189	34150-1426-1	112	36001-0063	182	360054000	145
15521-9602-2	152	310021000	189	34150-2156-1	81	36001-0066	178	360073000	146
15601-5412-1	26	31220-1429-3	16	34150-2156-1	84	36001-0066	182	360076000	145
19202-2354-1	15	31220-1429-3	18	34150-2194-2	90	36001-0069	178	360077000	146
19202-3566-1	2	31220-1429-3	59	34150-2758-1	60	36001-0069	182	360156000	146
200001000	189	31220-1429-3	60	34150-2758-1	66	36001-0072	179	360157000	147
200002050	189	31220-1429-3	66	34150-2758-1	68	36001-0072	183	36205-4825-2	114
200004020	189	31220-1429-3	68	34150-2843-1	219	36001-0077	178	36919-5665-0	309
200005060	190	31220-1429-3	224	34150-3764-4	237	36001-0077	182	36919-5666-1	309
200007180	189	31220-1429-3	226	34220-1451-2	54	36001-0080	173	37150-2616-1	105
200010	123	31220-2628-1	104	34260-2938-1	255	36001-0080	177	37150-2617-1	105
200011	123	31220-2639-2	104	34354-7158-3	237	36001-0080	179	37150-2618-1	105
200012	124	31220-7172-1	236	350005000	146	36001-0080	183	37150-3447-1	222
200015	124	31355-2662-1	106	350011000	146	36001-0082	179	37150-3447-1	224
200016	125	31355-2662-1	107	350024000	190	36001-0082	183	37150-3447-1	226
200017	125	31355-2669-1	107	350027000	146	36001-0097	178	37155-3447-1	256
200018	123	31355-2949-1	191	350027000	189	36001-0097	182	37155-3447-1	310
200019	125	31355-2949-1	230	350043000	146	36001-0100	173	37155-3447-1	313
200021	125	31355-2949-1	249	350044000	145	36001-0100	177	37300-1450-1	54
200024010	189	31355-2949-1	253	350046000	146	36001-0100	179	37300-2643-2	105
200027100	190	31355-3819-1	160	350073000	190	36001-0100	183	37300-2644-2	105
200036	126	31355-3819-1	161	35265-2321-1	67	36001-0120	172	37300-2648-1	105
200040	126	31355-4433-1	116	35265-2321-1	95	36001-0120	177	37300-2649-1	105
200041	126	31355-4433-1	356	35820-7556-1	309	36001-0120	179	37300-2661-4	105
21911312	158	31365-2278-1	72	360003000	146	36001-0120	183	37300-2817-2	104
21911313	158	31N1-08100	148	360009000	145	36001-0130	173	37305-2817-1	108
26001-0001	178	31N1-08100	151	360010000	146	36001-0130	177	37305-2817-1	111
26001-0001	182	31SB-01040	149	36001-0010	172	36001-0130	179	37305-2817-1	112
26001-0002	178	31SB-01040	152	36001-0010	177	36001-0130	183	37305-2817-1	114
26001-0002	182	320047000	190	36001-0010	179	36001-0140	173	37650-1128-1	51
26001-0010	171	320048000	189	36001-0010	183	36001-0140	177	37650-1128-1	133
26001-0010	176	32155-2648-1	115	36001-0030	173	36001-0140	179	37650-4314-0	71
26001-0010	179	32210-2758-1	59	36001-0030	177	36001-0140	183	37650-4317-0	71
26001-0010	183	32210-2758-1	60	36001-0030	179	36001-0150	173	37650-4368-0	50
26001-0040	172	32210-2758-1	62	36001-0030	183	36001-0150	177	37720-2821-7	110
26001-0040	176	32210-2758-1	63	36001-0041	178	36001-0150	179	37800-4387-1	105
26001-0040	179	32210-2758-1	64	36001-0041	182	36001-0150	183	37805-4350-1	108
26001-0040	183	32210-2758-1	66	36001-0042	178	36001-0160	172	37805-4350-1	110
300002000	146	32210-2758-1	68	36001-0042	182	36001-0160	176	37805-4350-1	112
300004000	146	32210-2758-1	115	36001-0043	178	36001-0160	179	37805-4350-1	136
300010	123	32210-2758-1	222	36001-0043	182	36001-0160	183	37805-4350-1	137

PART NO.	PAGE	PART NO.	PAGE	PART NO.	PAGE	PART NO.	PAGE	PART NO.	PAGE
37805-4452-1	78	3DG4-12121	151	5CIN305	172	C5510-43102	308	E5610-16171	22
37805-4452-1	80	3DG4-12605	149	5CIN305	176	C7170-83172	300	E5610-53714	20
380015000	189	3DG4-12605	152	5COR211661	176	C7170-83172	301	E5610-53723	20
38240-1883-1	268	3DG4-23340	152	5COR211761	172	C7910-42204	295	E5610-53733	20
38240-1883-1	315	3DH4-100000	150	5COR211761	176	C7910-42204	296	E5610-53734	20
38240-1883-1	354	3DH4-100000	153	5KC1858002	176	C7910-95382	81	E5615-25013	16
38240-2647-2	105	3DH4-12000	149	5KC1858010	172	C7910-95382	84	E5615-25014	16
38240-2651-5	104	3DH4-12000	153	5KC1858010	176	DX505515	120	E5616-74252	34
38240-3241-1	297	3DS1-14000	150	5TEL107110	172	E5205-54271	29	E5616-74252ED	34
38240-3241-1	298	3DS1-14000	153	5TEL107110	177	E5205-54271	31	E5619-12311	41
38245-2925-3	333	3DS1-22000	149	5V13306020	172	E5500-01623	3	E5620-72532	39
38260-2216-1	114	3DS1-22000	152	5V13306020	176	E5500-04463	8	E5627-04115	6
38325-1398-1	193	3DU4-08800	153	5V13505400	172	E5500-04464	8	E5627-04116	6
38360-2178-1	74	3SOF204100	176	5V13505400	176	E5500-11302	15	E5627-04132	7
38430-1827-1	241	3SOF204111	171	62331-1853-2	92	E5500-13332	9	E5627-32313	6
38430-1827-1	245	3SOF204111	176	62331-1853-2	93	E5500-13362	9	E5627-32323	6
38430-1827-1	268	3SP1109181	172	62331-1853-2	95	E5500-14232	9	E5627-56051	33
38430-1827-1	316	3SP1109181	177	62331-1853-2	97	E5500-15553	12	E5627-73031	34
38430-2633-3	104	3XTAP817130	173	66116-4135-3	203	E5500-15553	13	E5627-73031	35
38430-2634-3	104	3XTAP817130	177	66116-4135-3	249	E5500-16272	12	E5627-73032	35
38430-3556-1	259	3XTAP822150	172	66116-4135-3	254	E5500-16272	13	E5627-73341	37
38430-4515-1	259	3XTAP822150	176	66204-3623-1	199	E5500-22142	14	E5627-73341	38
38435-2179-1	74	400049000	190	67111-5832-3	259	E5500-23382	15	E5627-73411	34
38435-2716-1	115	410003000	189	700010	123	E5500-25164	16	E5627-73411	35
38440-4467-3	227	41011-5151-4	319	700011	124	E5500-33142	10	E5627-73432	34
38440-4475-1	227	41011-5151-4	322	700012	125	E5500-35154	1	E5627-73432	35
38450-2197-1	82	41011-5151-4	327	70515-1633-4	238	E5500-36932	7	E5627-73521	34
38450-2197-1	83	41182-5151-1	188	76KP-1308-1	267	E5500-39013	2	E5627-73521	35
38455-2314-1	86	41182-5151-1	190	82KC-0641	242	E5500-51662	29	E5627-73522	35
38630-4329-2	88	41387100	158	82KC-0641	245	E5500-51662	31	E5627-74282	39
38630-4476-1	227	440008000	147	84612-1445-0	214	E5500-52112	22	E5627-91131	6
39656100	158	440031000	189	84612-1445-0	217	E5500-52112	24	E5627-91141	6
39666200	158	440144000	145	84612-1823-0	318	E5500-52122	22	E5627-A0024	6
39700000	158	44512-6881-3	304	84612-1823-0	321	E5500-52122	24	E5627-A0025	6
39800000	158	450005000	147	84612-3473-0	264	E5500-63015	16	E5627-A0027	6
3CU5242100	172	450006000	190	84612-3473-0	265	E5500-63016	16	E5629-24401	23
3CU5242100	176	450007000	190	84612-3473-0	266	E5500-63016	18	E5629-25014	18
3CU5262120	172	460002000	146	84612-3777-0	159	E5500-72922	37	E5629-36412	3
3CU5262120	176	460006000	190	84612-4315-0	258	E5500-72922	38	E5629-64421	39
3DG4-00025	148	4CAV600650	172	84612-4316-0	258	E5500-73263	37	E5629-64421	40
3DG4-00025	151	4CAV600650	177	84612-4317-0	258	E5500-73263	38	E5629-74111	39
3DG4-00026	152	52200-2523-1	134	84612-4354-0	258	E5500-73272	37	E5629-74111	40
3DG4-00027	152	52200-2523-1	135	84612-4393-0	258	E5500-73272	38	E5640-14501	11
3DG4-00028	149	52200-2523-1	171	94612-1833-1	285	E5500-73332	7	E5640-14511	11
3DG4-00028	151	52200-2523-1	175	94612-1833-1	289	E5500-73342	1	E5640-16171	24
3DG4-00030	149	52300-3411-1	106	94612-4817-1	286	E5500-73342	37	E5640-72531	40
3DG4-00030	153	52300-3411-1	107	94612-4817-1	290	E5500-73342	38	E5640-72911	38
3DG4-00031	149	52320-4142-2	311	94612-9459-1	286	E5600-0304A	5	E5640-74281	40
3DG4-00031	153	52320-4142-2	312	94612-9459-1	290	E5600-03315	5	E5640-74282	40
3DG4-00059	149	52794-4242-1	309	99415-1502-2	360	E5600-03316	5	E5640-A0011	1
3DG4-00059	152	53650-6127-1	279	99415-1502-2	361	E5600-A0032	12	E5640-A0013	1
3DG4-00060	149	53650-6127-1	280	99415-1503-1	360	E5600-A0032	13	E5700-73361	171
3DG4-00060	152	54516-3213-1	117	99415-1503-1	361	E5603-52111	23	E5700-73361	175
3DG4-00061	149	54516-3213-1	357	AO034	121	E5603-52111	24	E5700-73361	196
3DG4-00061	152	55571-3238-1	187	AO035	121	E5603-A0301	4	E5752-35692	2
3DG4-00062	149	55571-3238-1	273	AO149	121	E5603-A0302	4	E5775-52031	23
3DG4-00062	152	56713-2813-1	158	BB6305	119	E5610-04611	16	E5775-52031	25
3DG4-10121	149	56713-6716-4	281	C5510-43101	305	E5610-04612	16	E5800-01601	3
3DG4-10121	151	57781-5121-1	216	C5510-43101	308	E5610-04612	18	E5800-01602	3
3DG4-12121	149	57781-5121-1	221	C5510-43102	305	E5610-04613	16	E5800-11766	41

PART NO.	PAGE	PART NO.	PAGE	PART NO.	PAGE	PART NO.	PAGE	PART NO.	PAGE
E5800-11822	41	E5850-56021	33	E6300-21313	14	E6305-54281	26	JA1C2008A	121
E5800-12352	41	E5850-56603	29	E6300-21332	14	E6305-54421	26	JA1C2009A	121
E5800-12373	194	E5850-56603	31	E6300-21353	14	E6305-92021	26	JA1C2010A	122
E5800-12373	195	E5850-56604	31	E6300-22026	14	E6305-96652	26	JA1C2012	121
E5800-14001	9	E5850-56605	31	E6300-22027	14	E6313-56421	33	JA4C2005	119
E5800-14051	9	E5850-57112	26	E6300-22028	14	E6403-13361	9	JA4C2010	119
E5800-14505	10	E5850-57112	28	E6300-22312	14	E6500-03142	4	JA4C2011	119
E5800-14514	10	E5850-57112	30	E6300-23531	15	E6500-42412	23	JA4C2015	120
E5800-22141	14	E5850-57212	26	E6300-23541	15	E6500-42413	24	JA4C2018	120
E5800-33144	29	E5850-57212	28	E6300-24012	12	E6510-05551	10	JA4C2019	121
E5800-33144	31	E5850-57212	30	E6300-24012	13	E6510-05551	41	JA5G3001	119
E5800-42501	20	E5850-57482	32	E6300-24251	12	E6510-05552	10	JA5G3002	119
E5800-51011	22	E5850-57483	27	E6300-24252	12	E6510-05552	11	JA5G3003	119
E5800-51012	22	E5850-57711	30	E6300-24253	12	E6510-05552	41	JA5G3004	119
E5800-51014	22	E5850-57712	30	E6300-24253	13	E6510-14532	10	JA5G3005	119
E5800-51015	22	E5850-57731	28	E6300-24281	12	E6510-14532	11	JA5G3006	119
E5800-51015	24	E5850-57731	30	E6300-24281	13	E6510-14671	10	JA5G3007	119
E5800-52111	22	E5850-57741	28	E6300-24321	12	E6510-14671	11	JA5G3008	119
E5800-52111	24	E5850-57742	28	E6300-24321	13	E6510-23251	15	JA5G3009	120
E5800-64102	39	E5850-57921	26	E6300-24361	12	E6510-33661	10	JA5G3010	120
E5800-64102	40	E5850-57921	28	E6300-24371	12	E6510-33661	11	JA5G3010A	120
E5800-65562	20	E5850-57921	30	E6300-24371	13	E6510-91501	9	JA5G3011	120
E5800-72711	197	E5850-60011	31	E6300-35681	2	E6510-91502	9	JA5G3012	121
E5800-72711	200	E5850-92011	28	E6300-51051	22	E6520-74151	39	K050508	122
E5800-72914	37	E5850-92011	30	E6300-51052	22	E6520-74151	40	K2400-22521	203
E5800-73011	37	E5900-96021	1	E6300-51052	24	E6720-21312	14	K2400-22541	204
E5800-73011	38	E5900-96021	4	E6300-53002	20	E6820-60011	31	K2400-22541	212
E5800-73052	34	E5900-96021	5	E6300-53003	20	E6850-03451	4	K5400-14571	75
E5800-73052	35	E5900-96031	1	E6300-53004	20	E6850-13561	4	K5400-14581	75
E5800-73513	34	E6200-04622	16	E6300-53005	20	E6850-13561	5	K5400-14591	75
E5800-73513	35	E6200-04623	16	E6300-53021	21	E6850-13581	4	KX97382-S51	192
E5800-73551	34	E6200-04623	18	E6300-53621	20	E6850-13581	5	KX97382-S51	193
E5800-73551	35	E6200-23472	15	E6300-53651	20	E6850-33661	10	MS50D110	121
E5800-74252	35	E6200-23482	15	E6300-56414	33	E6850-57151	26	NBRLM2015	121
E5800-74252ED	35	E6200-24112	14	E6300-A0033	8	E6850-57152	26	NBRLM2020	120
E5800-96031	6	E6200-25163	18	E6300-A0043	8	E6850-57311	32	OSAP1013	121
E5800-A0100	14	E6200-32113	3	E6300-A0053	8	E6850-60011	29	OSAP1314	120
E5850-03312	4	E6200-35012	1	E6301-03148	5	E6850-60012	29	P10000P3	120
E5850-03312	5	E6200-35013	1	E6301-13111	9	E6850-60012	31	P10000P4	120
E5850-05511	10	E6200-52142	23	E6301-13121	9	E7100-72411	200	P10000P6	121
E5850-05511	11	E6200-52142	25	E6301-13151	9	E7230-11081	192	P20000P1	120
E5850-14502	10	E6200-72412	197	E6301-14111	9	E7230-11081	193	P4510-41301	203
E5850-14503	10	E6200-72631	196	E6301-14311	9	E7230-11111002	192	P4510-41312	254
E5850-14512	10	E6200-72711	200	E6301-14351	9	E7230-11111002	193	P5370-32511	150
E5850-14521	10	E6201-32443	7	E6301-14431	9	E7230-11222	192	P5370-32511	153
E5850-14521	11	E6201-50619	34	E6301-21016	14	E7230-64012	39	P5370-41091	103
E5850-14561	10	E6201-50619	36	E6301-21053	14	E7230-64012	40	P5370-68481	310
E5850-14561	11	E6300-03453	5	E6301-21114	14	E7240-32731	38	P5370-68481	312
E5850-33111	29	E6300-04361	8	E6301-21152	14	E7310-36431	3	P5370-69321	310
E5850-33111	31	E6300-04362	8	E6301-21202	14	E8103-52111	24	P5370-82551	310
E5850-54251	28	E6300-04541	8	E6301-33812	2	GO065	120	P5370-82551	312
E5850-54252	30	E6300-04542	8	E6301-54121	26	J93E2008	119	PO014	121
E5850-54261	28	E6300-04811	8	E6301-54122	26	J93E2009	120	SFM0616	120
E5850-54261	30	E6300-04812	8	E6301-65512	20	J93E2014	120	SR25CS	119
E5850-54272	28	E6300-04813	8	E6302-04931	299	J93E2015	120	SR28CH	119
E5850-54272	30	E6300-04821	8	E6302-04931	301	J93E2016	120	SR35CH	121
E5850-54282	28	E6300-04822	8	E6302-04931	305	J93E2021	121	SR62CH	119
E5850-54282	30	E6300-15113	12	E6302-04931	307	J93E2022	121	T2131-33121	324
E5850-54291	28	E6300-15113	13	E6305-36422	3	JA1C1013	121	T2131-33131	324
E5850-54291	30	E6300-21162	14	E6305-54221	26	JA1C2001	119	T2131-33161	324

PART NO.	PAGE	PART NO.	PAGE	PART NO.	PAGE	PART NO.	PAGE	PART NO.	PAGE
T2131-33171	324	T2131-84581	323	T2131-94181	339	T2155-50011	223	T2181-25442	238
T2131-51031	329	T2131-84731	330	T2131-94191	337	T2155-50011	225	T2181-25491	238
T2131-69071	335	T2131-85101	330	T2131-94191	339	T2155-50011BB	223	T2181-25861	101
T2131-69171	335	T2131-85111	319	T2131-96111	338	T2155-50011BB	225	T2181-25862	101
T2131-69341	335	T2131-85121	319	T2131-96121	338	T2155-50012	223	T2181-28221	110
T2131-69351	335	T2131-85121	330	T2131-96211	337	T2155-50012	225	T2181-28231	110
T2131-69601	335	T2131-85131	320	T2131-96211	339	T2155-50013	223	T2181-37124	138
T2131-69801	335	T2131-85131	330	T2131-96221	337	T2155-50013	225	T2181-52024	285
T2131-70031	325	T2131-85141	320	T2131-96221	339	T2155-50201	223	T2181-52024	289
T2131-70041	325	T2131-85141	323	T2131-96231	337	T2155-50201ED	223	T2181-52026	285
T2131-70051	325	T2131-85211	330	T2131-96231	339	T2155-50202	223	T2181-52026	289
T2131-70061	325	T2131-86111	331	T2131-98111	337	T2155-50203	223	T2181-52027	285
T2131-80021	318	T2131-86121	331	T2131-98111	339	T2155-50611	243	T2181-52027	289
T2131-80021	321	T2131-86401	318	T2131-98121	337	T2155-50612	243	T2181-52028	285
T2131-82001	333	T2131-86401	321	T2131-98121	339	T2155-50613	243	T2181-52028	289
T2131-82011	333	T2131-86501	318	T2132-31111	323	T2155-50821	247	T2181-52029	285
T2131-82111	326	T2131-86501	321	T2132-80211	339	T2155-50821BB	247	T2181-52029	289
T2131-82121	326	T2131-87021	318	T2132-96111	340	T2155-50831	247	T2181-52451	287
T2131-82141	326	T2131-87021	321	T2132-96121	340	T2155-50831BB	247	T2181-52451	291
T2131-82151	326	T2131-87031	318	T2132-96131	340	T2155-53011	285	T2181-52452	287
T2131-82161	327	T2131-87031	321	T2132-96171	339	T2155-53011	289	T2181-52452	291
T2131-82161	332	T2131-87041	318	T2135-80011	318	T2155-65361	349	T2181-53271	350
T2131-82171	327	T2131-87041	321	T2135-80211	337	T2155-66101BB	249	T2181-53272	350
T2131-82211	318	T2131-87111	331	T2135-96171	337	T2155-66101BB	253	T2181-54121	287
T2131-82211	321	T2131-88111	331	T2136-80011	321	T2155-66121	249	T2181-55931	111
T2131-82221	318	T2131-88121	331	T2145-50201	225	T2155-66121	254	T2181-55941	219
T2131-82221	321	T2131-88201	341	T2145-50202	225	T2155-66131	249	T2181-55942	219
T2131-82421	334	T2131-88301	342	T2145-50203	225	T2155-66131	254	T2181-55951	219
T2131-82511	333	T2131-89101	342	T2145-69011	297	T2155-68491	165	T2181-55961	219
T2131-82521	333	T2131-89111	342	T2145-69012	297	T2155-68491	186	T2181-55981	219
T2131-83011	320	T2131-89401	343	T2145-69013	297	T2155-68491	208	T2181-55991	219
T2131-83011	323	T2131-91111	337	T2145-69421	309	T2155-68501	349	T2181-69701	316
T2131-83021	320	T2131-91111	339	T2145-69424	309	T2155-72162	198	T2181-70311	278
T2131-83021	323	T2131-91121	337	T2145-69425	309	T2155-73341	199	T2181-70311	280
T2131-83111	327	T2131-91121	339	T2145-69471	310	T2155-90011	165	T2181-70411	271
T2131-83121	327	T2131-91131	337	T2145-69472	311	T2155-90011	208	T2181-70413	271
T2131-83211	328	T2131-91131	339	T2145-97151	293	T2155-90012	186	T2181-70413	276
T2131-83761	329	T2131-91141	337	T2155-13111	199	T2155-90021	165	T2181-70461	274
T2131-83771	330	T2131-91141	339	T2155-13111ED	199	T2155-90021	186	T2181-70461	276
T2131-84101	329	T2131-91151	337	T2155-13522	198	T2155-90021	208	T2181-70511	220
T2131-84121	329	T2131-91151	339	T2155-13523	198	T2155-90031	349	T2181-81532	353
T2131-84131	329	T2131-91161	338	T2155-13531	198	T2155-90041	349	T2181-90072	166
T2131-84141	319	T2131-91161	340	T2155-13531ED	198	T2155-90111	178	T2181-90072	186
T2131-84141	322	T2131-91171	338	T2155-13541	198	T2155-90111	182	T2181-90072ED	209
T2131-84151	319	T2131-91171	340	T2155-13541ED	198	T2155-90201	178	T2181-95431	275
T2131-84151	322	T2131-91251	337	T2155-13571	199	T2155-90201	182	T2181-95431	277
T2131-84161	319	T2131-91251	339	T2155-13581	199	T2165-	359	T2181-95432	275
T2131-84161	322	T2131-91261	337	T2155-13591	199	T2180-12111	195	T2181-95432	277
T2131-84171	318	T2131-91261	339	T2155-13651	198	T2180-12121	195	T2181-97112	293
T2131-84171	321	T2131-94131	338	T2155-13661	198	T2180-12161	195	T2181-97121	293
T2131-84211	329	T2131-94131	340	T2155-13691	224	T2180-12171	195	T2181-97131	293
T2131-84251	329	T2131-94141	338	T2155-13691	226	T2180-55421	195	T2181-97191	293
T2131-84511	319	T2131-94141	340	T2155-13711	198	T2181-17551	284	T2181-	361
T2131-84511	322	T2131-94151	337	T2155-13711ED	198	T2181-19501	282	T2181-	356
T2131-84521	319	T2131-94151	339	T2155-13721	198	T2181-21312	205	T2185-00101	297
T2131-84521	322	T2131-94161	337	T2155-13721ED	198	T2181-21322	93	T2185-11622	192
T2131-84551	320	T2131-94161	339	T2155-30011	119	T2181-23142	67	T2185-11622	193
T2131-84551	323	T2131-94171	337	T2155-30012	119	T2181-24271	117	T2185-11623	193
T2131-84561	322	T2131-94171	339	T2155-31001	123	T2181-24751	137	T2185-11624	193
T2131-84571	322	T2131-94181	337	T2155-31002	123	T2181-25441	238	T2185-11732	192

PART NO.	PAGE	PART NO.	PAGE	PART NO.	PAGE	PART NO.	PAGE	PART NO.	PAGE
T2185-12114	194	T2185-22171	92	T2185-24332	103	T2185-28221	108	T2185-38062	161
T2185-12114	195	T2185-22171	97	T2185-24461	187	T2185-28221	112	T2185-38062	165
T2185-12124	194	T2185-22192	92	T2185-24525	117	T2185-28231	108	T2185-38071	160
T2185-13111	196	T2185-22341	89	T2185-24525	357	T2185-28231	112	T2185-38071	162
T2185-13122	196	T2185-22511	71	T2185-24562	118	T2185-28351	109	T2185-38072	160
T2185-13502	196	T2185-22512	71	T2185-24562	357	T2185-28351	111	T2185-38072	162
T2185-13521	196	T2185-22521	71	T2185-25121	83	T2185-28351	113	T2185-38072BB	160
T2185-13531	196	T2185-22531	71	T2185-25122	81	T2185-29813	210	T2185-38072BB	162
T2185-13541	196	T2185-22581	72	T2185-25122	83	T2185-29813	238	T2185-38111	161
T2185-13551	196	T2185-22626	71	T2185-25141	84	T2185-29813BB	209	T2185-38112	161
T2185-13561	196	T2185-22627	71	T2185-25142	81	T2185-31101	137	T2185-38113	159
T2185-13571	196	T2185-22712	72	T2185-25142	84	T2185-31102	136	T2185-38113	161
T2185-13581	197	T2185-22723	72	T2185-25161	83	T2185-31102	137	T2185-38121	161
T2185-13592	196	T2185-22771	72	T2185-25211	80	T2185-31103	136	T2185-38121	165
T2185-13611	197	T2185-22811	71	T2185-25221	80	T2185-31104	136	T2185-38402	171
T2185-13631	196	T2185-22812	71	T2185-25231	83	T2185-31132	51	T2185-38402	175
T2185-13641	196	T2185-22823	71	T2185-25311	83	T2185-31132	132	T2185-38403	171
T2185-14116	60	T2185-22844	71	T2185-25312	83	T2185-31132BB	132	T2185-38403	175
T2185-14117	60	T2185-22845	71	T2185-25313	83	T2185-31142	51	T2185-38404	171
T2185-14352	55	T2185-22852	72	T2185-25314	83	T2185-31142	133	T2185-38404	175
T2185-14362	55	T2185-23112	97	T2185-25315	81	T2185-31151	133	T2185-38404	181
T2185-14521	55	T2185-23121	97	T2185-25411	84	T2185-31202	132	T2185-38404	185
T2185-14713	58	T2185-23233	67	T2185-25412	84	T2185-31302	132	T2185-39271	143
T2185-14714	57	T2185-23313	78	T2185-25413	84	T2185-31332	133	T2185-39292	143
T2185-14714	58	T2185-23512	78	T2185-25414	81	T2185-31332BB	133	T2185-39301	143
T2185-14723	58	T2185-23623	78	T2185-25414	84	T2185-31342	133	T2185-41601	227
T2185-14752	58	T2185-23672	78	T2185-25452	65	T2185-31342BB	133	T2185-41611	227
T2185-14753	58	T2185-23686	78	T2185-25452	68	T2185-32201	132	T2185-41621	227
T2185-14811	58	T2185-23701	78	T2185-25453	65	T2185-32301	51	T2185-41631	227
T2185-21117	67	T2185-23823	89	T2185-25453	68	T2185-32301	132	T2185-41691	227
T2185-21119	67	T2185-23882	89	T2185-25461	82	T2185-33611	148	T2185-42142	42
T2185-21122	89	T2185-24104	116	T2185-25461	84	T2185-33611	151	T2185-42143	42
T2185-21153	64	T2185-24104	356	T2185-25863	212	T2185-33651	310	T2185-42291	46
T2185-21154	64	T2185-24114	116	T2185-25864	212	T2185-33661	310	T2185-42361	49
T2185-21155	64	T2185-24114	356	T2185-25902	65	T2185-33751	275	T2185-42371	49
T2185-21215	93	T2185-24122	116	T2185-25902OE	66	T2185-33751	277	T2185-42381	49
T2185-21243	93	T2185-24122	356	T2185-25902OE	68	T2185-33761	101	T2185-42391	49
T2185-21261	93	T2185-24131	86	T2185-26101	104	T2185-33762	101	T2185-42451	45
T2185-21351	93	T2185-24131	117	T2185-26102	104	T2185-33771	98	T2185-42461	45
T2185-21365	93	T2185-24131	357	T2185-26103	104	T2185-33772	98	T2185-42471	45
T2185-21366	93	T2185-24141	86	T2185-26104	104	T2185-33781	101	T2185-42481	45
T2185-21375	93	T2185-24142	117	T2185-26111	89	T2185-33782	101	T2185-42491	45
T2185-21514	74	T2185-24142	357	T2185-26121	88	T2185-35004	165	T2185-42751	45
T2185-21521	74	T2185-24151	86	T2185-26121	89	T2185-35004	229	T2185-42761	45
T2185-21531	74	T2185-24152	86	T2185-26341	104	T2185-35004BB	163	T2185-42771	45
T2185-21561	74	T2185-24152	117	T2185-26511	104	T2185-37011	167	T2185-42781	45
T2185-21611	74	T2185-24152	357	T2185-26521	104	T2185-37021	167	T2185-42791	45
T2185-21621	74	T2185-24161	116	T2185-26551	105	T2185-37161	167	T2185-42801	45
T2185-21631	74	T2185-24161	356	T2185-26561	105	T2185-37201	139	T2185-43201	45
T2185-21643	74	T2185-24174	86	T2185-26683	107	T2185-38002	159	T2185-43202	45
T2185-21651	74	T2185-24174	87	T2185-26684	107	T2185-38002	161	T2185-43211	45
T2185-21714	73	T2185-24232	116	T2185-26712	114	T2185-38003	159	T2185-43212	45
T2185-21715	73	T2185-24232	356	T2185-26721	114	T2185-38003	161	T2185-43311	45
T2185-21781	73	T2185-24273	357	T2185-26831	114	T2185-38003	165	T2185-43312	45
T2185-21981	81	T2185-24283	208	T2185-27112	114	T2185-38003BB	163	T2185-43442	47
T2185-21981	83	T2185-24283	210	T2185-27141	114	T2185-38031	159	T2185-43462	48
T2185-22111	89	T2185-24283	212	T2185-27142	114	T2185-38031	161	T2185-43471	48
T2185-22141	89	T2185-24292	101	T2185-27201	114	T2185-38031	163	T2185-43541	49
T2185-22151	92	T2185-24292	212	T2185-27202	114	T2185-38041	161	T2185-43621	50
T2185-22162	92	T2185-24324	97	T2185-27312	114	T2185-38061	161	T2185-43632	48

PART NO.	PAGE	PART NO.	PAGE	PART NO.	PAGE	PART NO.	PAGE	PART NO.	PAGE
T2185-43642	48	T2185-50091	222	T2185-51142	240	T2185-55323BB	266	T2185-60415	206
T2185-43651	48	T2185-50203	221	T2185-51142	243	T2185-55471	248	T2185-60415	207
T2185-43652	48	T2185-50261	295	T2185-51142BB	240	T2185-55471	252	T2185-60416	98
T2185-43661	50	T2185-50441	222	T2185-51142BB	243	T2185-55471ED	248	T2185-60416	206
T2185-43671	50	T2185-50441	224	T2185-51151	240	T2185-55471ED	252	T2185-60416	207
T2185-43681	50	T2185-50441	226	T2185-51151	243	T2185-55513	202	T2185-60416	208
T2185-43691	48	T2185-50612	240	T2185-51151BB	240	T2185-55514	202	T2185-60416	210
T2185-43812	47	T2185-50641	241	T2185-51151BB	243	T2185-55671	264	T2185-60422	98
T2185-43822	47	T2185-50641	244	T2185-51161	240	T2185-55671	265	T2185-60422	207
T2185-43831	48	T2185-50651	241	T2185-51161	243	T2185-55671	266	T2185-60434	207
T2185-43832	48	T2185-50651	245	T2185-51161BB	240	T2185-55682	264	T2185-60435	207
T2185-43841	47	T2185-50692	221	T2185-51161BB	244	T2185-55682	265	T2185-60932	213
T2185-43842	47	T2185-50706	240	T2185-51172	240	T2185-55682	266	T2185-60933	213
T2185-43851	48	T2185-50706	243	T2185-51172	244	T2185-55712	217	T2185-62101	134
T2185-43861	47	T2185-50707	243	T2185-51172BB	240	T2185-55722	217	T2185-62241	249
T2185-43871	47	T2185-50802	239	T2185-51172BB	244	T2185-55731	214	T2185-62241	254
T2185-43881	47	T2185-50802BB	239	T2185-51182	241	T2185-55731	217	T2185-64301	316
T2185-43881	49	T2185-50811	239	T2185-51182	244	T2185-55731BB	214	T2185-65012	272
T2185-43891	47	T2185-50811BB	239	T2185-51182BB	241	T2185-55761	215	T2185-65013	272
T2185-43891	49	T2185-50824	246	T2185-51182BB	244	T2185-55761	217	T2185-65013	276
T2185-43901	47	T2185-50834	246	T2185-51194	316	T2185-55781	215	T2185-65233BB	186
T2185-43901	49	T2185-50841	246	T2185-51462	287	T2185-55781	218	T2185-65353BB	187
T2185-44312	102	T2185-50841	247	T2185-51462	291	T2185-55782	208	T2185-65364	349
T2185-44312	103	T2185-50852	246	T2185-52102	241	T2185-55782	210	T2185-65371	191
T2185-44313	102	T2185-50852	247	T2185-52102	244	T2185-55782	215	T2185-65413	187
T2185-44313	103	T2185-50862	246	T2185-53153	287	T2185-55782	218	T2185-65433	186
T2185-44364	213	T2185-50862	247	T2185-53153	291	T2185-55792	215	T2185-65472	209
T2185-44365	210	T2185-50872	246	T2185-53162	286	T2185-55792	218	T2185-65472	210
T2185-44365	213	T2185-50872	247	T2185-53162	290	T2185-55793	208	T2185-65472	231
T2185-44365BB	208	T2185-50872ED	247	T2185-53173	287	T2185-55793	210	T2185-65514	187
T2185-44531	91	T2185-50882	246	T2185-53173	291	T2185-55793	215	T2185-65581	203
T2185-44551	89	T2185-50882	247	T2185-53174	287	T2185-55793	218	T2185-65581001	203
T2185-44562	91	T2185-50882ED	247	T2185-53174	291	T2185-55801	215	T2185-65606	203
T2185-44571	91	T2185-50891	246	T2185-53184	286	T2185-55801	217	T2185-65613	203
T2185-44572	91	T2185-50902	239	T2185-53184	290	T2185-55802	208	T2185-65623	203
T2185-44581	53	T2185-50911	241	T2185-53193	118	T2185-55802	210	T2185-65624	203
T2185-44612	90	T2185-50911	244	T2185-53193	358	T2185-55802	215	T2185-65633	203
T2185-44612	91	T2185-50921	241	T2185-54113	290	T2185-55802	218	T2185-65634	203
T2185-44641	227	T2185-50921	244	T2185-54151	290	T2185-55811	215	T2185-65641	203
T2185-44764	103	T2185-50921ED	241	T2185-55104	252	T2185-55811	218	T2185-65651	203
T2185-44773	102	T2185-50921ED	244	T2185-55105	252	T2185-55812	208	T2185-65651001	203
T2185-44773	103	T2185-50952	242	T2185-55106	252	T2185-55812	210	T2185-65662	204
T2185-45003	134	T2185-50952	245	T2185-55107	252	T2185-55812	215	T2185-65672	204
T2185-45003	135	T2185-50953	245	T2185-55108	252	T2185-55812	218	T2185-66001	135
T2185-45012	134	T2185-50962	242	T2185-55109	252	T2185-55911	216	T2185-66011	250
T2185-45012	135	T2185-50962	245	T2185-5510A	252	T2185-55912	216	T2185-66011	254
T2185-45021	134	T2185-50963	245	T2185-5510B	252	T2185-60023	261	T2185-66021	134
T2185-45021	135	T2185-51111	240	T2185-55313	264	T2185-60034	262	T2185-66021	135
T2185-45032	134	T2185-51111	243	T2185-55313	265	T2185-60085	261	T2185-66041	248
T2185-45032	135	T2185-51111BB	240	T2185-55313	266	T2185-60091	261	T2185-66041	252
T2185-45043	157	T2185-51111BB	243	T2185-55313BB	265	T2185-60091	263	T2185-66053	248
T2185-45044	157	T2185-51121	240	T2185-55313BB	266	T2185-60131	261	T2185-66053	253
T2185-45044BB	158	T2185-51121	243	T2185-55322	264	T2185-60141	262	T2185-66061	248
T2185-49281	348	T2185-51121BB	240	T2185-55322	265	T2185-60151	262	T2185-66061	253
T2185-49401	348	T2185-51121BB	243	T2185-55322	266	T2185-60152	262	T2185-66062	248
T2185-49401	362	T2185-51132	240	T2185-55323	264	T2185-60161	262	T2185-66062	253
T2185-49451	348	T2185-51132	243	T2185-55323	265	T2185-60241	303	T2185-66104	253
T2185-49451	362	T2185-51132BB	198	T2185-55323	266	T2185-60241	306	T2185-66105	249
T2185-50015	221	T2185-51132BB	240	T2185-55323BB	264	T2185-60372	205	T2185-66105	253
T2185-50051	222	T2185-51132BB	243	T2185-55323BB	265	T2185-60414	207	T2185-66105BB	249

PART NO.	PAGE	PART NO.	PAGE	PART NO.	PAGE	PART NO.	PAGE	PART NO.	PAGE
T2185-66105BB	253	T2185-69871	306	T2185-71513	236	T2185-90222BB	171	T2195-21123	88
T2185-66112	249	T2185-69872	303	T2185-71513BB	236	T2185-90222BB	175	T2195-21141	62
T2185-66112	253	T2185-69872	306	T2185-71613	236	T2185-90253	174	T2195-21142	62
T2185-66121	249	T2185-69873	303	T2185-71613BB	236	T2185-90263	164	T2195-21143	62
T2185-66121	253	T2185-69873	306	T2185-71621	236	T2185-90264	164	T2195-21144	62
T2185-66132	249	T2185-69874	303	T2185-71631	236	T2185-90264	170	T2195-21152	63
T2185-66132	254	T2185-69874	306	T2185-71641	236	T2185-90264	174	T2195-21153	63
T2185-66151	158	T2185-69875	303	T2185-71651	236	T2185-90264	180	T2195-21154	63
T2185-66161	250	T2185-69875	306	T2185-71661	236	T2185-90264	184	T2195-21411	70
T2185-66161	255	T2185-69971	304	T2185-71671	236	T2185-90264BB	170	T2195-21423	70
T2185-66221	134	T2185-69971	307	T2185-71691	236	T2185-90264BB	174	T2195-21432	70
T2185-66221	135	T2185-70116	280	T2185-72462	197	T2185-95013	267	T2195-21443	70
T2185-66231	134	T2185-70117	280	T2185-72462	199	T2185-95023	267	T2195-21452	70
T2185-66231	135	T2185-70126	280	T2185-72462ED	199	T2185-95052	267	T2195-21471	70
T2185-66531	186	T2185-70191	281	T2185-76021	157	T2185-95052BB	267	T2195-21622	69
T2185-66671	270	T2185-70223	279	T2185-76101	157	T2185-95111	314	T2195-21623	69
T2185-66671	272	T2185-70223	281	T2185-76102	157	T2185-95121	314	T2195-21624	69
T2185-66671	275	T2185-70231	280	T2185-79011	315	T2185-95131	314	T2195-21625	69
T2185-66671	277	T2185-70233	280	T2185-79051	315	T2185-95141	314	T2195-21632	69
T2185-66721	187	T2185-70272	279	T2185-81112	257	T2185-95214	268	T2195-22052	88
T2185-68381	312	T2185-70272	281	T2185-81112BB	257	T2185-95423	272	T2195-22062	88
T2185-68421	312	T2185-70322	278	T2185-81123	257	T2185-95424	272	T2195-22072	88
T2185-68441	312	T2185-70322	280	T2185-81124	257	T2185-95424BB	272	T2195-22082	88
T2185-68442	312	T2185-70331	278	T2185-81124BB	257	T2185-95425	277	T2195-22092	88
T2185-68502	349	T2185-70331	280	T2185-81132	17	T2185-95431	272	T2195-22111	88
T2185-68661	315	T2185-70341	278	T2185-81132BB	17	T2185-95432	270	T2195-23113	95
T2185-69014	298	T2185-70341	280	T2185-81132BB	19	T2185-95432	272	T2195-23122	95
T2185-69015	298	T2185-70425	271	T2185-81153	259	T2185-95432	275	T2195-23232	95
T2185-69071	315	T2185-70427	269	T2185-81154	259	T2185-95432	277	T2195-23233	95
T2185-69161	296	T2185-70427	271	T2185-81155	259	T2185-95432BB	270	T2195-23262	95
T2185-69223	310	T2185-70427	274	T2185-81155BB	259	T2185-95432BB	272	T2195-23263	95
T2185-69252	303	T2185-70427	276	T2185-81162	259	T2185-95611	352	T2195-23521	76
T2185-69252	306	T2185-70433	282	T2185-81162ED	259	T2185-95612	352	T2195-23533	76
T2185-69262	257	T2185-70433	284	T2185-81172	260	T2185-97161	293	T2195-23541	76
T2185-69321	257	T2185-70442	271	T2185-82551	310	T2185-97171	293	T2195-23561	76
T2185-69385	309	T2185-70443	269	T2185-82551	312	T2185-97182	293	T2195-23613	77
T2185-69387	309	T2185-70443	271	T2185-82561	200	T2185-	362	T2195-23633	76
T2185-69388	309	T2185-70444	269	T2185-82561	310	T2188-43501	351	T2195-23661	76
T2185-69394	309	T2185-70444	271	T2185-82561	313	T2188-43531	351	T2195-23671	76
T2185-69395	309	T2185-70444	274	T2185-82571	310	T2188-43751	351	T2195-23681	76
T2185-69446	310	T2185-70444	276	T2185-82571	312	T2188-47501	351	T2195-23691	76
T2185-69473	313	T2185-70455	269	T2185-85101005	354	T2188-47531	351	T2195-23711	76
T2185-69474	313	T2185-70455	271	T2185-85103	354	T2188-47551	351	T2195-24323	95
T2185-69532	316	T2185-70455	274	T2185-85104	354	T2188-	351	T2195-24324	95
T2185-69562	315	T2185-70455	276	T2185-85112	354	T2195-14114	59	T2195-25232	81
T2185-69563	315	T2185-70471	269	T2185-85131	354	T2195-14115	59	T2195-25241	79
T2185-69582	310	T2185-70471	271	T2185-85131BB	354	T2195-14116	59	T2195-25272	79
T2185-69611	255	T2185-70471	274	T2185-90032	349	T2195-14451	54	T2195-26101	104
T2185-69651	314	T2185-70471	276	T2185-90042	349	T2195-14721	57	T2195-26111	88
T2185-69661	315	T2185-70471BB	269	T2185-90072	349	T2195-14813	57	T2195-26511	104
T2185-69692	315	T2185-70471BB	271	T2185-90111	174	T2195-21112	65	T2195-26521	104
T2185-69713	314	T2185-70481	269	T2185-90112	170	T2195-21113	65	T2195-26684	106
T2185-69723	314	T2185-70481	272	T2185-90112	174	T2195-21114	65	T2195-31111	148
T2185-69732	314	T2185-70482	269	T2185-90211	174	T2195-21115	65	T2195-31112	148
T2185-69732BB	314	T2185-70482	272	T2185-90211BB	174	T2195-21116	65	T2195-31112BB	148
T2185-69742	314	T2185-70482	274	T2185-90212	184	T2195-21117	65	T2195-31112BB	151
T2185-69742BB	314	T2185-70482	276	T2185-90222	171	T2195-21118	65	T2195-31122	148
T2185-69771	310	T2185-70621	273	T2185-90222	175	T2195-21119	65	T2195-31122	151
T2185-69771	312	T2185-71221	187	T2185-90222	180	T2195-2111A	65	T2195-31132	148
T2185-69871	303	T2185-71513	235	T2185-90222	184	T2195-2111B	65	T2195-31133	148

PART NO.	PAGE	PART NO.	PAGE	PART NO.	PAGE	PART NO.	PAGE	PART NO.	PAGE
T2195-32111	99	T2195-37071BB	131	T2195-65011	270	T2198-69262	257	T2350-44621	53
T2195-32111	127	T2195-37081	163	T2195-65011	274	T2198-69263	257	T2350-46611	317
T2195-32111	129	T2195-37081	167	T2195-65011BB	270	T2198-69511	118	T2350-46611	355
T2195-32121	99	T2195-37113	167	T2195-65371	230	T2198-70471	275	T2350-50021	222
T2195-32121	127	T2195-37132	168	T2195-65651	101	T2198-70471	277	T2350-50021	224
T2195-32121	129	T2195-37133	168	T2195-65651	212	T2198-90251	170	T2350-50021	226
T2195-32132	150	T2195-37134	168	T2195-69611	295	T2198-90251	174	T2350-50031	193
T2195-32132	153	T2195-37135BB	168	T2195-69611	296	T2198-90251	180	T2350-50252	296
T2195-32141	148	T2195-37136	168	T2195-70116	278	T2198-90251	184	T2350-50252ED	296
T2195-32142	148	T2195-37141	168	T2195-70126	278	T2198-90251BB	170	T2350-50421	196
T2195-32152	99	T2195-37142	168	T2195-70232	278	T2198-90251BB	174	T2350-50421	248
T2195-32153	99	T2195-37143	168	T2195-70233	278	T2198-90252	180	T2350-50421	252
T2195-32163	99	T2195-37144BB	168	T2195-70234	278	T2198-90252	184	T2350-50421	269
T2195-32172	99	T2195-37145	168	T2195-70415	269	T2230-85242	293	T2350-50421	271
T2195-32212	99	T2195-37151	167	T2195-70416	269	T2240-12602	51	T2350-50421	274
T2195-32222	99	T2195-37161	167	T2195-70416	274	T2240-12602	132	T2350-50421	276
T2195-32222	127	T2195-37162	167	T2195-70462	269	T2240-12702	51	T2350-50431	196
T2195-32222	129	T2195-38031	164	T2195-70462	271	T2240-12702	133	T2350-50431	248
T2195-32232	99	T2195-38031	168	T2195-76001	157	T2240-26353	104	T2350-50431	252
T2195-32232	127	T2195-38041	159	T2195-90111	170	T2240-26354	104	T2350-50431	269
T2195-32232	130	T2195-38041	163	T2195-90111	174	T2240-28242	108	T2350-50431	271
T2195-32241	128	T2195-38051	168	T2195-90211	170	T2240-28242	110	T2350-50431	274
T2195-32241	150	T2195-38052	164	T2195-90211	180	T2240-28272	108	T2350-50431	276
T2195-32241	154	T2195-38052	168	T2195-90211BB	170	T2240-28272	110	T2350-52171	285
T2195-32612	148	T2195-38062	159	T2195-95424	270	T2241-50311	286	T2350-52171	289
T2195-32612	151	T2195-38062ED	163	T2195-95424BB	270	T2241-50311	290	T2350-53121	285
T2195-32631	148	T2195-38111	159	T2195-95425	275	T2305-14151	136	T2350-53141	285
T2195-32631	151	T2195-38111	163	T2195-	116	T2305-14151	137	T2350-53141	289
T2195-32651	149	T2195-38122	163	T2195-	116	T2305-21761	84	T2350-54131	287
T2195-32651	152	T2195-38122	168	T2198-24461	187	T2305-21762	75	T2350-54131	291
T2195-32661	152	T2195-44341	208	T2198-27831	250	T2305-21762	78	T2350-54141	287
T2195-32692	152	T2195-44341	210	T2198-27831	253	T2305-21762	84	T2350-54141	291
T2195-32701	152	T2195-44341	213	T2198-31131	128	T2305-21891	73	T2350-55291	250
T2195-33111	155	T2195-44531	90	T2198-31131	151	T2305-25191	74	T2350-55291	255
T2195-33112	155	T2195-44563	90	T2198-32142	151	T2305-43883	54	T2350-55292	250
T2195-33113	155	T2195-44572	90	T2198-33121	155	T2305-43883	56	T2350-55292	255
T2195-33113BB	155	T2195-44581	52	T2198-33141	155	T2305-51191	59	T2350-55452	264
T2195-33144	155	T2195-44591	52	T2198-33141BB	148	T2325-50192	286	T2350-55452	265
T2195-33161	155	T2195-44761	102	T2198-33141BB	163	T2325-50192	290	T2350-55452	266
T2195-33162	155	T2195-44762	102	T2198-33661	118	T2325-50512	286	T2350-55453	265
T2195-33171	156	T2195-52151	286	T2198-35112	154	T2325-50512	290	T2350-55453	266
T2195-33171	163	T2195-54112	286	T2198-38111	159	T2325-50743	286	T2350-55462	265
T2195-33201	155	T2195-54151	287	T2198-38112BB	159	T2325-50743	290	T2350-55462	266
T2195-33201003	155	T2195-55106	248	T2198-38113	161	T2330-50471	241	T2350-55531	201
T2195-33611	148	T2195-55107	248	T2198-38113BB	159	T2350-21332	93	T2350-55531	202
T2195-33611	151	T2195-55512	201	T2198-60021	261	T2350-24251	117	T2350-55541	201
T2195-37011	167	T2195-55512BB	201	T2198-60021	263	T2350-24251	357	T2350-55541	202
T2195-37031	169	T2195-55521	201	T2198-60081	261	T2350-25361	75	T2350-55871	201
T2195-37032	169	T2195-55521	202	T2198-60081	263	T2350-25361	82	T2350-55871	202
T2195-37033	169	T2195-55531	214	T2198-60081BB	261	T2350-25361	84	T2350-55881	201
T2195-37034	169	T2195-55712	214	T2198-60081BB	263	T2350-25871	101	T2350-55881	202
T2195-37034BB	164	T2195-55713	214	T2198-60111	261	T2350-25871	212	T2350-55881	261
T2195-37043	167	T2195-55714	214	T2198-60111	263	T2350-25891001	155	T2350-55922	216
T2195-37044	167	T2195-55722	214	T2198-60431	98	T2350-25891002	155	T2350-55922	350
T2195-37044BB	163	T2195-55723	214	T2198-60432	98	T2350-26661	273	T2350-55942	216
T2195-37052	131	T2195-55723BB	214	T2198-66031	250	T2350-37551	222	T2350-55951	216
T2195-37052BB	131	T2195-60425	206	T2198-66031	255	T2350-37551	226	T2350-55961	201
T2195-37061	131	T2195-60425BB	206	T2198-68811	299	T2350-42171	228	T2350-55961	202
T2195-37061BB	131	T2195-60431	206	T2198-68811	304	T2350-44611	53	T2350-55961	214
T2195-37071	131	T2195-60431BB	206	T2198-69251	299	T2350-44621	52	T2350-55961	217

PART NO.	PAGE	PART NO.	PAGE	PART NO.	PAGE	PART NO.	PAGE	PART NO.	PAGE
T2350-60131	262	T2360-32641	149	T2440-14591	55	T2565-14371	55	T2610-39562	141
T2350-60442	206	T2360-32641	151	T2440-14621	55	T2565-14411	55	T2610-39572	128
T2350-60442	207	T2360-32651	149	T2440-14641	55	T2565-14421	55	T2610-39572	141
T2350-69551	315	T2360-32681	152	T2440-14671	55	T2565-14431	55	T2610-39572	150
T2350-69571	315	T2360-32711	152	T2440-14971	58	T2565-14441	55	T2610-39572	151
T2350-70152	278	T2360-32731	149	T2440-21361	72	T2567-12152	194	T2610-39572	165
T2350-70152	280	T2360-32731	153	T2440-21681	83	T2610-21754	74	T2610-39572	186
T2350-70161	278	T2360-33123	155	T2440-21901	74	T2610-21812	72	T2610-39572	208
T2350-70161	280	T2360-33131	155	T2440-21901	84	T2610-21812	74	T2610-39572	349
T2350-70171	278	T2360-33192	155	T2440-21981	83	T2610-22171	92	T2610-39582	141
T2350-70171	280	T2360-33192	187	T2440-25131	83	T2610-23811	89	T2610-39601	141
T2350-70181	278	T2360-33192	249	T2440-26572	108	T2610-23831	89	T2610-39611	142
T2350-70181	280	T2360-33192	253	T2440-26572	110	T2610-23841	89	T2610-39621	141
T2350-70182	278	T2360-34141	150	T2440-26572	112	T2610-23851	89	T2610-39631	141
T2350-70182	280	T2360-34141	153	T2440-26632	106	T2610-24461	187	T2610-39641	141
T2350-70492	269	T2360-34151	150	T2440-26632	107	T2610-31311	51	T2610-39652	142
T2350-70492	272	T2360-34151	153	T2440-27353	115	T2610-31311	132	T2610-39661	141
T2350-70492	274	T2360-34161	150	T2440-28162	109	T2610-37303	139	T2610-39672	141
T2350-70492	276	T2360-34161	154	T2440-28162	111	T2610-37312	139	T2610-39681	142
T2350-71102	232	T2360-37081	168	T2440-28182	108	T2610-37322	139	T2610-39802	144
T2350-71102BB	232	T2360-37101	131	T2440-28182	110	T2610-37331	139	T2610-39811	144
T2350-71112	232	T2360-37151	158	T2440-28182	112	T2610-37352	139	T2610-39821	144
T2350-71211	232	T2360-44591	75	T2440-28192	109	T2610-37362	139	T2610-39832	144
T2350-71231	232	T2360-44591	79	T2440-28192	111	T2610-37421	139	T2610-39842	144
T2350-71241	232	T2360-53151	286	T2440-28202	108	T2610-37442	139	T2610-39852	144
T2350-90171	171	T2360-95081	267	T2440-28202	110	T2610-37453	139	T2610-39862	144
T2350-90171	175	T2360-95091	267	T2440-28203	108	T2610-37461	139	T2610-39882	191
T2350-90311	170	T2368-32151	127	T2440-28203	112	T2610-37471	138	T2610-39882	230
T2350-90311	174	T2368-32151	129	T2440-43492	50	T2610-37473	138	T2610-39901	144
T2350-90311	180	T2368-32161	127	T2440-43611	50	T2610-37852	350	T2610-39911	144
T2350-90311	184	T2368-32161	129	T2440-44251	90	T2610-37862	188	T2610-39921	144
T2350-90331	170	T2368-32171	127	T2440-44251	91	T2610-37871	190	T2610-39931	144
T2350-90331	174	T2368-32171	129	T2440-44251	116	T2610-39021	350	T2610-39951	144
T2350-90331	180	T2368-32191	127	T2440-44251	356	T2610-39031	188	T2610-39961	144
T2350-90331	184	T2368-32191	129	T2445-28147	108	T2610-39202	143	T2610-50271	295
T2350-95082	267	T2368-32251	129	T2445-28147	110	T2610-39212	143	T2610-50271	296
T2350-95082BB	267	T2368-32252	127	T2445-28147	112	T2610-39222	143	T2610-52461	285
T2350-95092	267	T2368-32252	129	T2445-28157	108	T2610-39233	143	T2610-52461	289
T2350-95092BB	267	T2368-32261	129	T2445-28157	110	T2610-39252	143	T2610-55751	214
T2350-95471	273	T2368-32262	127	T2445-28157	112	T2610-39261	143	T2610-55751	217
T2350-95472	187	T2368-32262	129	T2445-29781	238	T2610-39281	143	T2610-55772	215
T2350-95472	273	T2368-35122	154	T2445-29822	233	T2610-39351	140	T2610-55772	218
T2351-52101	285	T2368-35131	154	T2445-50724	286	T2610-39352	140	T2610-55772BB	215
T2351-52101	289	T2368-35132	154	T2445-50724	290	T2610-39371	140	T2610-55772BB	218
T2351-52102	285	T2368-35141	154	T2540-27611	362	T2610-39402	140	T2610-66441	205
T2351-52102	289	T2368-60441	98	T2540-27621	345	T2610-39411	140	T2611-26692	286
T2351-55462	264	T2368-60441	206	T2540-27631	345	T2610-39422	140	T2611-26692	290
T2360-32182	99	T2368-60441	207	T2540-27651	345	T2610-39431	140	T2611-26693	286
T2360-32182	127	T2368-69961	304	T2540-27711	362	T2610-39441	140	T2611-26693	290
T2360-32182	129	T2368-69961	307	T2540-38251	194	T2610-39451	140	T2611-29821	238
T2360-32251	99	T2380-50271	296	T2540-43751	348	T2610-39462	140	T2611-29822	238
T2360-32251	127	T2380-50272	296	T2540-43761	348	T2610-39463	140	T2611-29831	238
T2360-32251	129	T2391-84241	329	T2540-54602	359	T2610-39472	140	T2611-29841	238
T2360-32353	100	T2440-14201	114	T2540-73341	197	T2610-39473	140	T2611-29852	238
T2360-32353	127	T2440-14531	55	T2540-A0040BE	345	T2610-39481	141	T2611-44931	359
T2360-32353	130	T2440-14542	55	T2541-88212	287	T2610-39491	141	T2611-50021	294
T2360-32353	155	T2440-14552	55	T2541-88212	291	T2610-39511	141	T2611-50021BB	294
T2360-32511	153	T2440-14561	55	T2546-28211	108	T2610-39521	141	T2611-50031	294
T2360-32621	148	T2440-14571	55	T2546-28211	110	T2610-39531	141	T2611-50031	363
T2360-32621	151	T2440-14581	55	T2546-28211	112	T2610-39551	141	T2611-50041	294

PART NO.	PAGE	PART NO.	PAGE	PART NO.	PAGE	PART NO.	PAGE	PART NO.	PAGE
T2611-50041	363	T2630-43051	44	T4125-28271	110	T4240-27672	345	T4520-43601	227
T2611-52351	291	T2630-43101	43	T4125-28271	112	T4240-27682	345	T4520-43652	48
T2611-52461	287	T2630-43102	43	T4125-33161002	204	T4240-27743	360	T4520-43662	48
T2611-52461	291	T2630-43111	43	T4125-35011	257	T4240-27743	361	T4520-43672	48
T2611-54822	257	T2630-43121	43	T4125-35012	258	T4240-31052	303	T4520-53891	353
T2611-69061	315	T2630-85411	235	T4125-35021	258	T4240-31052	306	T4520-54222	335
T2611-69541	316	T2630-85421	235	T4125-38151	160	T4240-35015	257	T4520-54222	341
T2611-69932	352	T2630-85431	235	T4125-38151	161	T4240-35023	258	T4520-54222	342
T2611-75712	316	T2630-85441	235	T4125-50681	223	T4240-35083	258	T4520-62252	254
T2611-75951	301	T2670-55531	201	T4125-50681	225	T4240-35092	258	T4520-63381	132
T2611-75951	305	T2670-55531	202	T4125-50691	225	T4240-43133	258	T4520-75031	299
T2611-75951	307	T2670-55531	217	T4125-50692	223	T4240-43134	258	T4520-75031	301
T2611-79011	315	T2670-55841	216	T4125-50692	225	T4257-67511	118	T4520-75031	304
T2611-79021	316	T4025-57521	292	T4125-50693	223	T4260-14271	64	T4520-75031	307
T2611-79041	315	T4025-58531	288	T4125-50693	225	T4260-14271	86	T4520-75174	297
T2611-81541	353	T4025-58531	292	T4125-56111	283	T4260-27691	345	T4520-75175	297
T2611-85721	293	T4025-58541	287	T4125-56111	288	T4260-33631	309	T4520-75176	297
T2611-87822	353	T4025-58541	291	T4125-56111	291	T4340-27121	115	T4520-75481	304
T2612-24921	218	T4025-58551	286	T4125-56141	283	T4340-27122	115	T4520-75481	307
T2615-25681	76	T4025-58551	290	T4125-56141	288	T4340-27131	344	T4520-76553	297
T2615-25691	76	T4025-58561	285	T4125-56141	291	T4340-27131	345	T4520-76553	298
T2615-52141	350	T4025-58561	289	T4125-56151	283	T4340-27131	346	T4520-82551	342
T2615-53561	287	T4025-58571	286	T4125-56151	288	T4340-27161	115	T4520-82561	197
T2615-53561	291	T4025-58571	290	T4125-56151	291	T4340-31141	264	T4520-82561	200
T2615-54112	286	T4025-58581	287	T4125-56161	283	T4340-31141	265	T4520-82561	336
T2615-54112	290	T4025-58581	291	T4125-56161	288	T4340-31141	266	T4520-83301	187
T2615-55112	287	T4025-58591	283	T4125-56161	291	T4340-38241	199	T4520-83301	273
T2615-55112	290	T4025-58591	287	T4125-56171	283	T4340-38241	318	T4520-87402	330
T2615-60142	261	T4025-58591	289	T4125-56171	288	T4340-38241	321	T4520-88401	327
T2615-65712	203	T4025-58711	288	T4125-56171	292	T4340-38751	37	T4520-88401	329
T2615-85112	354	T4025-58711	292	T4125-56181	283	T4340-71661	236	T4520-88401	331
T2615-85112BB	354	T4025-58721	288	T4125-56181	288	T4340-71701	236	T4520-90042	165
T2615-85131	354	T4025-58721	292	T4125-56181	292	T4340-87181	335	T4520-90042	171
T2615-91133	234	T4025-58731	283	T4125-60141	261	T4340-A0110	197	T4520-90042	175
T2615-91142	233	T4025-58731	288	T4125-60141	263	T4351-43101	305	T4520-90042	180
T2615-91143	234	T4025-58731	292	T4125-91161	234	T4351-43101	308	T4520-90042	184
T2615-91153	233	T4025-58741	285	T4125-91162	234	T4520-26161	253	T4520-90042	186
T2615-93031	232	T4025-58741	289	T4144-75951	299	T4520-26911	224	T4520-90042	209
T2615-93131	233	T4025-58751	286	T4144-75952	299	T4520-26911	226	T4520-90042	349
T2620-31182	132	T4025-58751	290	T4144-85721	293	T4520-27831	205	T4520-90093	166
T2620-31183	51	T4115-43871	105	T4145-60581	223	T4520-27831	250	T4520-90093	186
T2625-91116	233	T4115-66441	205	T4145-60581	225	T4520-27831	253	T4520-90093	349
T2625-91117	233	T4121-31051	303	T4145-60582	223	T4520-37372	165	T4620-21371	93
T2625-91118	233	T4121-31051	306	T4145-60582	225	T4520-37372	186	T4620-21521	81
T2625-91122	234	T4121-31052	303	T4145-69331	309	T4520-37372	208	T4620-21521	83
T2625-93012	232	T4121-31052	306	T4145-82052	318	T4520-37372	349	T4620-21591	46
T2625-93013	232	T4121-31053	299	T4145-82052	321	T4520-41821	299	T4620-22731	70
T2625-93022	232	T4121-31053	301	T4145-82072	333	T4520-41821	301	T4620-22731	72
T2625-93023	232	T4121-31053	303	T4145-82081	333	T4520-41821	304	T4620-22791	72
T2625-93112	233	T4121-31053	306	T4157-70151	278	T4520-41821	307	T4620-23681	78
T2625-93113	233	T4125-13561	198	T4180-69951	299	T4520-42351	76	T4620-25383	81
T2625-93122	233	T4125-14261	64	T4180-69951	301	T4520-42361	76	T4620-25383	84
T2625-93123	233	T4125-14261	86	T4180-69961	299	T4520-42371	47	T4620-25442	81
T2630-41654	42	T4125-14261	87	T4180-69961	301	T4520-43071	43	T4620-25442	84
T2630-42161	42	T4125-14261	116	T4180-69961	304	T4520-43081	43	T4620-25452	81
T2630-42321	43	T4125-14261	356	T4180-69961	307	T4520-43091	43	T4620-25452	84
T2630-43011	43	T4125-24171	117	T4180-69961	336	T4520-43131	43	T4620-35011	229
T2630-43021	43	T4125-24171	357	T4180-69961	341	T4520-43141	43	T4620-35012	163
T2630-43031	43	T4125-28241	110	T4180-69961	342	T4520-43151	43	T4620-35012	165
T2630-43041	44	T4125-28241	112	T4240-21792	74	T4520-43171	43	T4620-35012	229

PART NO.	PAGE	PART NO.	PAGE	PART NO.	PAGE	PART NO.	PAGE	PART NO.	PAGE
T4620-37092	164	T4625-29291	293	T4682-66061	254	T4815-93211	332		
T4620-37092	169	T4625-31151	51	T4682-66071	250	T4818-83001	320		
T4620-37092	170	T4625-31151	132	T4682-66071	255	T4818-83001	323		
T4620-37092	175	T4625-31163	132	T4682-66081	250	T4833-87141	333		
T4620-37092	180	T4625-31361	51	T4682-66081	254	T4835-17241	261		
T4620-37092	184	T4625-31361	132	T4682-66111	250	T4835-17241	263		
T4620-37121	136	T4625-52351	285	T4682-66111	255	T4835-65432	219		
T4620-37121	137	T4625-52351	289	T4682-69161	295	T4835-87621	327		
T4620-44331	92	T4625-52361	285	T4682-69161	296	T4835-87621	332		
T4620-44331	95	T4625-52361	289	T4682-87812	324	T4837-77772	297		
T4620-44331	97	T4625-55431	198	T4682-87821	324	T4837-77773	297		
T4620-44331	102	T4625-55431	270	T4682-87831	324	T4850-93051	233		
T4620-44331	103	T4625-55431	272	T4682-87841	324	T4920-87851	324		
T4620-44592	52	T4625-55431	275	T4684-69021004	297	T4930-14261	64		
T4620-44592	53	T4625-55431	277	T4686-50241	295	T4930-51351	330		
T4620-44592	90	T4625-55441	318	T4686-60082	262	T4930-51361	330		
T4620-44592	91	T4625-55441	321	T4686-68521	186	T4930-54501	343		
T4620-50592	191	T4625-65571	203	T4686-68521	349	T4930-55411	343		
T4620-50592	230	T4625-65571	261	T4686-69491	309	T4930-68811	304		
T4620-50701	239	T4625-65571	263	T4686-69491	312	T4930-69911	335		
T4620-50701	242	T4625-75191	297	T4686-69881	299	T4930-81321	330		
T4620-50701	245	T4628-66211	191	T4686-69881	301	T4930-81331	330		
T4620-60151	293	T4680-14211	42	T4686-69882	299	T4930-83082	333		
T4620-66161	134	T4680-36001	229	T4686-69882	301	T5248-52101	283		
T4620-66161	135	T4680-36002	229	T4688-69312	341	T5248-52101	285		
T4620-69024	297	T4680-93041	232	T4688-69321	341	T5248-52101	289		
T4620-69024	298	T4680-93061	233	T4689-52181	287	T5515-75171	297		
T4620-69025	298	T4680-93211	331	T4689-52181	291	T5515-75171	298		
T4620-69054	303	T4681-37431	139	T4710-65141	204	U3230-85611	287		
T4620-69054	306	T4681-37861	350	T4710-69021013	297	U3230-85611	290		
T4620-69272	317	T4681-83431	330	T4710-69971	304	WAS08	122		
T4620-69272	355	T4681-83431	334	T4710-69971	307	WBM0515	121		
T4620-69331	309	T4681-83611	335	T4710-72412	200	WBM0610	120		
T4620-69362	311	T4681-83711	335	T4710-72413	200	WBM0840	122		
T4620-69362	312	T4681-85011	331	T4710-72414	200	WBM1045	121		
T4620-69362	355	T4681-85321	326	T4710-72432	200	X162121175	172		
T4620-69462	310	T4681-85321	331	T4710-72433	200	X162121175	176		
T4620-69462	312	T4681-85331	326	T4710-72434	200	XAST	175		
T4620-69471	310	T4681-85331	331	T4720-90091	209	XAST281404	171		
T4620-69472	310	T4681-90911	326	T4810-21621	90	XAST281404	176		
T4620-69472	312	T4681-90911	329	T4810-22581	76	XGIU530580	172		
T4620-76002	157	T4681-90911	331	T4810-22852	72	XGIU530580	177		
T4620-76031	157	T4682-34141	134	T4810-66721	186				
T4620-81842	327	T4682-34141	135	T4810-69941	352				
T4620-81842	329	T4682-34142	135	T4810-82341	343				
T4620-81842	331	T4682-37221	171	T4810-82352	333				
T4620-85392	232	T4682-37221	175	T4810-82421	343				
T4620-85451	232	T4682-43132	43	T4810-82741	330				
T4620-85451	235	T4682-48061	251	T4815-65511	219				
T4620-85471	237	T4682-48061	254	T4815-67371	20				
T4620-88051	327	T4682-50251	246	T4815-78111	334				
T4624-11011	192	T4682-50251	247	T4815-82361	336				
T4624-11011	193	T4682-50351	221	T4815-88231	335				
T4624-11012	193	T4682-50361	221	T4815-89171	335				
T4624-11111	192	T4682-50682	221	T4815-93211	201				
T4624-11111	193	T4682-55421	264	T4815-93211	202				
T4624-84411	335	T4682-55421	265	T4815-93211	279				
T4624-84511	326	T4682-55801	262	T4815-93211	281				
T4624-84511	331	T4682-66031	255	T4815-93211	327				
T4625-29291	264	T4682-66061	250	T4815-93211	329				

INDEX 2

PARTS GROUP	GROUP NO.	PAGE	PARTS GROUP	GROUP NO.	PAGE
1	CK30HEU-T345B	208	ELECTRICITY SYSTEM 2 GROUP	CK30ME-T940-1A	306
1	CK30MEU-T345B	210	ELECTRICITY SYSTEM 2 GROUP	X10.30HE-T940A	299
	CK30MEU-T725B	165	ELECTRICITY SYSTEM 2 GROUP	X10.30ME-T940A	301
ACCELERATOR GROUP	CK30M-T860A	261	ELECTRICITY SYSTEM 3 GROUP	CK35ME-T950A	309
ACCELERATOR GROUP	CT230-T860A	263	ELETRICAL GROUP	CK30C-T9060A	335
AIR CLEANER GROUP	CK30M-T010A	192	ENGINE STOP LEVER GROUP	3A165LXB-E160	28
AIR CLEANER GROUP	CK35M-T010A	193	ENGINE STOP LEVER GROUP	4B243LX-E160	30
ALTERNATOR GROUP	3A150LX-E200	39	FENDER GROUP	CK30M-T880-1A	267
ALTERNATOR GROUP	3A165LXB-E200	40	FLYWHEEL GROUP	3A150D-E120	16
ASSY,HST GROUP	CK35HE-T350A	123	FLYWHEEL GROUP	3A150E-E120	18
ASSY,HST GROUP	CK35H-T350A	119	FRAME GROUP	CK30H-T840A	248
AUX SPEED SHIFT LEVER GROUP	1-30ME-T345A	98	FRAME GROUP	CK30M-T840A	252
AUX SPEED SHIFT LEVER GROUP	CK30H-T340A	206	FRONT & REAR WHEEL GROUP	CT230-T1115B	362
AUX SPEED SHIFT LEVER GROUP	CK30M-T340A	207	FRONT AXLE BRACKET GROUP	CK30M-T600A	227
BATTERY GROUP	CK30ME-T920A	295	FRONT AXLE CASE GROUP	CK30M-T550A	48
BATTERY GROUP	CK35HE-T920A	296	FRONT AXLE FRAME GROUP	CK30M-T500A	221
BEACON LIGHT GROUP	CK20C-T9110A	341	FRONT AXLE FRAME GROUP	CK35H-T500A	223
BEVEL PINION SHAFT GROUP	CK30M-T530A	45	FRONT AXLE FRAME GROUP	CK35M-T500A	225
BONNET 1 GROUP	CK30M-T810A	239	FRONT AXLE GROUP	CK30M-T560A	50
BONNET 2 GROUP	CK30M-T820A	240	FRONT AXLE SUPPORT GROUP	CK30M-T510A	42
BONNET 2 GROUP	CK35-T820A	243	FRONT DIFF SYSTEM GROUP	CK30M-T520A	43
BONNET 3 GROUP	CK30M-T830A	246	FRONT DRIVE FORK GROUP	CK30H-T420A	102
BONNET 3 GROUP	CK35M-T830A	247	FRONT DRIVE FORK GROUP	CK30M-T420A	103
BRAKE CASE GROUP	CK30ME-T460A	110	FRONT DRIVE LEVER GROUP	CK30M-T430A	213
BRAKE CASE GROUP	CK30M-T460A	108	FRONT DRIVING GEAR GROUP	CK30H-T280A	90
BRAKE CASE GROUP	CK35M-T460A	112	FRONT DRIVING GEAR GROUP	CK30M-T280A	91
BRAKE PEDAL GROUP	CK30H-T470A	214	FRONT GLASS GROUP	CK30C-T9020A	326
BRAKE PEDAL GROUP	CK30ME-T470A	217	FRONT WEIGHT GROUP	EX40-T1065C	359
CABIN GROUP	CK30C-T9000A	318	FRONT WHEEL GROUP	CK30ME-T570A	348
CABIN GROUP	CK30C-T9001A	321	FRONT WHEEL GROUP	CK30M-T570A	347
CAMSHAFT GROUP	3A165-E100	12	FUEL CAMSHAFT GROUP	3A150E-E140	22
CAMSHAFT GROUP	3A165LW-E100	13	FUEL CAMSHAFT GROUP	3A150LW-E140	24
CD PLATER GROUP	CK20C-T9130A	343	FUEL TANK GROUP	CK30M-T850A	257
CLUTCH GROUP	CK30H-T100A	54	GEAR CASE GROUP	3A150LX-E040	6
CLUTCH GROUP	CK30M-T100A	55	GEAR PUMP GROUP	CK30M-T710A	157
CLUTCH HOUSING 1 GROUP	CK30H-T130A	59	GROUP,GOVERNOR	3A150LX-E170	33
CLUTCH HOUSING 1 GROUP	CK30M-T130A	60	HST CASE GROUP	CK30H-T150A	62
CLUTCH HOUSING 2 GROUP	CK30M-T140A	61	HST CONTROL 1 GROUP	CK30H-T360A	99
CLUTCH LEVER GROUP	CK30H-T110A	57	HST CONTROL 1 GROUP	CT230-T360A	129
CLUTCH LEVER GROUP	CK30M-T110A	58	HST CONTROL 2 GROUP	CK30H-T690A	148
CLUTCH PEDAL GROUP	CK30H-T120A	201	HST CONTROL 2 GROUP	CT230H-T690A	151
CLUTCH PEDAL GROUP	CK30M-T120A	202	HST CONTROL 3 GROUP	CK30H-T700A	155
COVER GROUP	CK30M-T265B	87	HST CONTROL_1 GROUP	CK35H-T360A	127
CYLINDER BLOCK GROUP	3A165LX-E010	1	HST EXTERNAL HYDRAULIC LINE GROUP	CK30H-T735A	167
CYLINDER HEAD COVER GROUP	3A165-E090	10	HST IN HYDRAULIC LINE GROUP	CK30H-T370A	131
CYLINDER HEAD COVER GROUP	3A165LX-E090	11	HST OUTPUT SHAFT GROUP	CK30H-T190A	70
CYLINDER HEAD GROUP	3A165LW-E030	4	HYDRAULIC CYLINDER BODY GROUP	CK30ME-T630-2A	138
CYLINDER HEAD GROUP	3A165LXB-E030	5	HYDRAULIC CYLINDER GROUP	CK30HE-T620-2A	136
DETENT DOUBLE ACTING VALVE GROUP	CK30H-T765-1A	188	HYDRAULIC CYLINDER GROUP	CK30ME-T620-2A	137
DETENT DOUBLE ACTING VALVE GROUP	CK30M-T765-1A	189	HYDRAULIC LIFT ARM GROUP	CK30M-T640A	139
DIFF GEAR SHAFT GROUP	CK30M-T540A	47	HYDRAULIC(1)GROUP	CK30H-T725B	163
DIFF LOCK FORK GROUP	CK30H-T450A	106	HYDRULIC SYSTEM 1 GROUP	CK30ME-T650A	143
DIFF LOCK FORK GROUP	CK30M-T450A	107	HYDRULIC SYSTEM 2 GROUP	D360-T640A	140
DOOR GROUP	CK30C-T9030A	329	INLET TUBE GROUP	CK30H-T720-1A	159
DOWN SPEED CONTROL GROUP	CK30H-T770A	230	INLET TUBE GROUP	CK30M-T720-1A	161
DOWN SPEED CONTROL GROUP	CK30M-T770A	191	INSTRUMENT COVER GROUP	CK30HE-T870A	264
ELECTRICITY SYSTEM 1GROUP	CK35ME-T930A	297	INSTRUMENT COVER GROUP	CK30HE-T875A	265
ELECTRICITY SYSTEM 1GROUP	X10.30ME-T930A	298	INSTRUMENT COVER GROUP	CK30ME-T875A	266
ELECTRICITY SYSTEM 1GROUP	X10.30ME-T950A	312	JOYSTICK VALVE GROUP	CK30H-T750A	170
ELECTRICITY SYSTEM 2 GROUP	CK30HE-T940-1A	303	JOYSTICK VALVE GROUP	CK30M-T750A	174

PARTS GROUP	GROUP NO.	PAGE	PARTS GROUP	GROUP NO.	PAGE
JOYSTICK VALVE GROUP	CK35H-T750A	178	SHUTTLE FORK GROUP	CK30M-T290A	92
JOYSTICK VALVE GROUP	CK35M-T750A	182	SHUTTLE LEVER GROUP	CK30ME-T300A	203
LABEL GROUP	CK2810HEU-T915A	283	SHUTTLE SYSTEM GROUP	CK30M-T200A	71
LABEL GROUP	CK35HE-T970-1A	285	SOUNDPROOF GROUP	CK30C-T9100A	337
LABEL GROUP	CK35ME-T970-1A	289	SOUNDPROOF GROUP	CK30C-T9101A	339
LIGHT LH GROUP	CK30ME-T960-1A	314	SPEED CONTROL LEVER GROUP	4B243-E150	26
MAIN BEARING CASE GROUP	3A165-E050	8	SPEED SHIFT FORK GROUP	CK30H-T230A	76
MAIN DISTRIBUTOR VALVE GROUP	CK30M-T680A	145	SPEED SHIFT FORK GROUP	CK30H-T330A	95
MAIN SHAFT GROUP	CK30H-T180A	69	SPEED SHIFT FORK GROUP	CK30M-T230A	78
MAIN SHIFT FORK GROUP	CK30M-T310A	93	SPEED SHIFT FORK GROUP	CK30M-T330A	97
MAIN SHIFT LEVER GROUP	CK30M-T320A	205	SPRIAL BEVEL GEAR GROUP	CK30H-T270A	88
MANIFOLD GROUP	3A150E-E220	41	SPRIAL BEVEL GEAR GROUP	CK30M-T270A	89
MID CASE GROUP	CK30H-T160A	63	STEERING CYLINDER GROUP	CK30M-T580A	132
MID CASE GROUP	CK30M-T160A	64	STEERING CYLINDER GROUP	CK30M-T585B	51
MID PTO GROUP	1-30HE-T1055A	116	STEP GROUP	CK30HE-T900-1A	278
MID PTO GROUP	CK30E-T1055B	356	STEP GROUP	CK30ME-T900-1A	280
MID PTO SHAFT GROUP	CK30M-T260A	86	SUN ROOF GROUP	CK30M-T1040A	354
MOUNTING GROUP	CK30C-T9010A	324	SWING DRAWBAR GROUP	CK30ME-T805A	238
MUFFLER GROUP	CK30M-T020A	194	THREE POINT LINK SYSTEM 1GROUP	CK30ME-T790A	232
MUFFLLER GROUP	CK350-T020A	195	THREE POINT LINK SYSTEM 2GROUP	CK30E-T795A	235
NOZZLE HOLDER GROUP	3A165A-E130	20	THREE POINT LINK SYSTEM 2GROUP	CK30M-T795A	236
OIL INLET TUBE GROUP	CK30M-T730A	229	TOP LINK BRACKET GROUP	D360-T650A	144
OIL PAN GROUP	3A150E-E020	3	TOWING HOOK GROUP	CK30E-T2000B	363
PARKING BRAKE GROUP	CK30ME-T475A	219	TOWING HOOK GROUP	CK30ME-T990A	294
PIN SOCKET GROUP	CK30ME-T1020A	352	TRANSMISSION CASE GROUP	CK30H-T170A	65
PISTON & CRANKSHAFT GROUP	3A165C-E110	14	TRANSMISSION CASE GROUP	CK30ME-T170A	67
POSITION DRAFT CONTROL LEVER GROUP	CK30M-T780-2A	231	TURF TIRES GROUP	CK30E-T1000A	351
POWER STEERING CYLINDER GROUP	CK30H-T590A	134	VALVE ROCKER ARM GROUP	3A165-E080	9
POWER STEERING GROUP	CK30M-T590A	135	WATER HOSE GROUP	3A150E-E190	37
PROPER SHAFT GROUP	CK30H-T610A	52	WATER HOSE GROUP	3A165LXB-E190	38
PROPER SHAFT GROUP	CK30M-T610A	53	WATER PUMP GROUP	3A150LX-E180	34
PTO DRIVE SHAFT GROUP	CK30H-T240A	79	WATER PUMP GROUP	3A165LXB-E180	35
PTO DRIVE SHAFT GROUP	CK30M-T240A	80	WORKING LIGHT A GROUP	CK30M-T1050A	355
PTO SHAFT GROUP	CK30H-T250A	81	WORKING LIGHT GROUP	CK20C-T9120A	342
PTO SHAFT GROUP	CK30M-T250A	83	WORKING LIGHT GROUP	CT230-T1050A	317
PTO SHIFT LEVER GROUP	1-30H-T395A	101			
PTO SHIFT LEVER GROUP	CK30M-T390A	212			
RADIATOR GROUP	CK30M-T030A	196			
RADIATOR GROUP	CK35-T030A	198			
REAR AXLE GROUP	CK30M-T480A	114			
REAR DIFF SYSTEM GROUP	CK30M-T440A	104			
REAR GLASS GROUP	CK30C-T9040A	331			
REAR VIEW MIRROR GROUP	CK30ME-T1030A	353			
REAR WEIGHT GROUP	EX40-T1075B	360			
Rear Weights Group(Option)	EX40-T1075C	361			
REAR WHEEL GROUP	CK30ME-T490A	345			
REAR WHEEL GROUP	CK30M-T490A	344			
REAR WHEEL GROUP	DK45HSE-T495A	346			
REMOTE HYDRAULIC LEVER GROUP	CK30M-T767-4A	349			
REMOTE HYDRAULIC VALVE GROUP	CK30M-T760-2A	186			
ROOF GROUP	CK30C-T9050A	333			
ROPS GROUP	CK35ME-T980A	293			
SEAT FLOOR GROUP	CK30HE-T890A	269			
SEAT FLOOR GROUP	CK30ME-T890A	271			
SEAT FLOOR GROUP	CK35HE-T895A	274			
SEAT FLOOR GROUP	CK35ME-T895A	276			
SEAT GROUP	CK30ME-T910B	282			
SEAT GROUP	CK35ME-T915B	284			
SHAFT 1 GROUP	CK30M-T210A	73			
SHAFT 2 GROUP	CK30M-T220A	74			

INDEX 3

PARTS GROUP	GROUP NO.	PAGE
<CABIN>		
BEACON LIGHT GROUP	CK20C-T9110A	341
CABIN GROUP	CK30C-T9000A	318
CABIN GROUP	CK30C-T9001A	321
CD PLATER GROUP	CK20C-T9130A	343
DOOR GROUP	CK30C-T9030A	329
ELETRICAL GROUP	CK30C-T9060A	335
FRONT GLASS GROUP	CK30C-T9020A	326
MOUNTING GROUP	CK30C-T9010A	324
REAR GLASS GROUP	CK30C-T9040A	331
ROOF GROUP	CK30C-T9050A	333
SOUNDPROOF GROUP	CK30C-T9100A	337
SOUNDPROOF GROUP	CK30C-T9101A	339
WORKING LIGHT GROUP	CK20C-T9120A	342
<CHASSIS>		
1	CK30HEU-T345B	208
1	CK30MEU-T345B	210
ACCELERATOR GROUP	CK30M-T860A	261
ACCELERATOR GROUP	CT230-T860A	263
AIR CLEANER GROUP	CK30M-T010A	192
AIR CLEANER GROUP	CK35M-T010A	193
AUX SPEED SHIFT LEVER GROUP	CK30H-T340A	206
AUX SPEED SHIFT LEVER GROUP	CK30M-T340A	207
BONNET 1 GROUP	CK30M-T810A	239
BONNET 2 GROUP	CK30M-T820A	240
BONNET 2 GROUP	CK35-T820A	243
BONNET 3 GROUP	CK30M-T830A	246
BONNET 3 GROUP	CK35M-T830A	247
BRAKE PEDAL GROUP	CK30H-T470A	214
BRAKE PEDAL GROUP	CK30ME-T470A	217
CLUTCH PEDAL GROUP	CK30H-T120A	201
CLUTCH PEDAL GROUP	CK30M-T120A	202
DOWN SPEED CONTROL GROUP	CK30H-T770A	230
FENDER GROUP	CK30M-T880-1A	267
FRAME GROUP	CK30H-T840A	248
FRAME GROUP	CK30M-T840A	252
FRONT AXLE BRACKET GROUP	CK30M-T600A	227
FRONT AXLE FRAME GROUP	CK30M-T500A	221
FRONT AXLE FRAME GROUP	CK35H-T500A	223
FRONT AXLE FRAME GROUP	CK35M-T500A	225
FRONT DRIVE LEVER GROUP	CK30M-T430A	213
FUEL TANK GROUP	CK30M-T850A	257
INSTRUMENT COVER GROUP	CK30HE-T870A	264
INSTRUMENT COVER GROUP	CK30HE-T875A	265
INSTRUMENT COVER GROUP	CK30ME-T875A	266
LABEL GROUP	CK2810HEU-T915A	283
LABEL GROUP	CK35HE-T970-1A	285
LABEL GROUP	CK35ME-T970-1A	289
MAIN SHIFT LEVER GROUP	CK30M-T320A	205
MUFFLER GROUP	CK30M-T020A	194
MUFFLLER GROUP	CK350-T020A	195
OIL INLET TUBE GROUP	CK30M-T730A	229
PARKING BRAKE GROUP	CK30ME-T475A	219
POSITION DRAFT CONTROL LEVER GROUP	CK30M-T780-2A	231
PTO SHIFT LEVER GROUP	CK30M-T390A	212
RADIATOR GROUP	CK30M-T030A	196
RADIATOR GROUP	CK35-T030A	198
ROPS GROUP	CK35ME-T980A	293
SEAT FLOOR GROUP	CK30HE-T890A	269
SEAT FLOOR GROUP	CK30ME-T890A	271

PARTS GROUP	GROUP NO.	PAGE
SEAT FLOOR GROUP	CK35HE-T895A	274
SEAT FLOOR GROUP	CK35ME-T895A	276
SEAT GROUP	CK30ME-T910B	282
SEAT GROUP	CK35ME-T915B	284
SHUTTLE LEVER GROUP	CK30ME-T300A	203
STEP GROUP	CK30HE-T900-1A	278
STEP GROUP	CK30ME-T900-1A	280
SWING DRAWBAR GROUP	CK30ME-T805A	238
THREE POINT LINK SYSTEM 1GROUP	CK30ME-T790A	232
THREE POINT LINK SYSTEM 2GROUP	CK30E-T795A	235
THREE POINT LINK SYSTEM 2GROUP	CK30M-T795A	236
TOWING HOOK GROUP	CK30ME-T990A	294
<ELECTRICAL>		
BATTERY GROUP	CK30ME-T920A	295
BATTERY GROUP	CK35HE-T920A	296
ELECTRICITY SYSTEM 1GROUP	CK35ME-T930A	297
ELECTRICITY SYSTEM 1GROUP	X10.30ME-T930A	298
ELECTRICITY SYSTEM 1GROUP	X10.30ME-T950A	312
ELECTRICITY SYSTEM 2 GROUP	CK30HE-T940-1A	303
ELECTRICITY SYSTEM 2 GROUP	CK30ME-T940-1A	306
ELECTRICITY SYSTEM 2 GROUP	X10.30HE-T940A	299
ELECTRICITY SYSTEM 2 GROUP	X10.30ME-T940A	301
ELECTRICITY SYSTEM 3 GROUP	CK35ME-T950A	309
LIGHT LH GROUP	CK30ME-T960-1A	314
WORKING LIGHT GROUP	CT230-T1050A	317
<ENGINE>		
ALTERNATOR GROUP	3A150LX-E200	39
ALTERNATOR GROUP	3A165LXB-E200	40
CAMSHAFT GROUP	3A165-E100	12
CAMSHAFT GROUP	3A165LW-E100	13
CYLINDER BLOCK GROUP	3A165LX-E010	1
CYLINDER HEAD COVER GROUP	3A165-E090	10
CYLINDER HEAD COVER GROUP	3A165LX-E090	11
CYLINDER HEAD GROUP	3A165LW-E030	4
CYLINDER HEAD GROUP	3A165LXB-E030	5
ENGINE STOP LEVER GROUP	3A165LXB-E160	28
ENGINE STOP LEVER GROUP	4B243LX-E160	30
FLYWHEEL GROUP	3A150D-E120	16
FLYWHEEL GROUP	3A150E-E120	18
FUEL CAMSHAFT GROUP	3A150E-E140	22
FUEL CAMSHAFT GROUP	3A150LW-E140	24
GEAR CASE GROUP	3A150LX-E040	6
GROUP,GOVERNOR	3A150LX-E170	33
MAIN BEARING CASE GROUP	3A165-E050	8
MANIFOLD GROUP	3A150E-E220	41
NOZZLE HOLDER GROUP	3A165A-E130	20
OIL PAN GROUP	3A150E-E020	3
PISTON & CRANKSHAFT GROUP	3A165C-E110	14
SPEED CONTROL LEVER GROUP	4B243-E150	26
VALVE ROCKER ARM GROUP	3A165-E080	9
WATER HOSE GROUP	3A150E-E190	37
WATER HOSE GROUP	3A165LXB-E190	38
WATER PUMP GROUP	3A150LX-E180	34
WATER PUMP GROUP	3A165LXB-E180	35
<FRONT AXLE>		
BEVEL PINION SHAFT GROUP	CK30M-T530A	45
DIFF GEAR SHAFT GROUP	CK30M-T540A	47
FRONT AXLE CASE GROUP	CK30M-T550A	48
FRONT AXLE GROUP	CK30M-T560A	50
FRONT AXLE SUPPORT GROUP	CK30M-T510A	42

PARTS GROUP	GROUP NO.	PAGE	PARTS GROUP	GROUP NO.	PAGE
FRONT DIFF SYSTEM GROUP	CK30M-T520A	43	BRAKE CASE GROUP	CK35M-T460A	112
PROPER SHAFT GROUP	CK30H-T610A	52	CLUTCH GROUP	CK30H-T100A	54
PROPER SHAFT GROUP	CK30M-T610A	53	CLUTCH GROUP	CK30M-T100A	55
STEERING CYLINDER GROUP	CK30M-T585B	51	CLUTCH HOUSING 1 GROUP	CK30H-T130A	59
<HYDRAULIC>			CLUTCH HOUSING 1 GROUP	CK30M-T130A	60
	CK30MEU-T725B	165	CLUTCH HOUSING 2 GROUP	CK30M-T140A	61
ASSY,HST GROUP	CK35HE-T350A	123	CLUTCH LEVER GROUP	CK30H-T110A	57
ASSY,HST GROUP	CK35H-T350A	119	CLUTCH LEVER GROUP	CK30M-T110A	58
DETENT DOUBLE ACTING VALVE GROUP	CK30H-T765-1A	188	COVER GROUP	CK30M-T265B	87
DETENT DOUBLE ACTING VALVE GROUP	CK30M-T765-1A	189	DIFF LOCK FORK GROUP	CK30H-T450A	106
DOWN SPEED CONTROL GROUP	CK30M-T770A	191	DIFF LOCK FORK GROUP	CK30M-T450A	107
GEAR PUMP GROUP	CK30M-T710A	157	FRONT DRIVE FORK GROUP	CK30H-T420A	102
HST CONTROL 1 GROUP	CT230-T360A	129	FRONT DRIVE FORK GROUP	CK30M-T420A	103
HST CONTROL 2 GROUP	CK30H-T690A	148	FRONT DRIVING GEAR GROUP	CK30H-T280A	90
HST CONTROL 2 GROUP	CT230H-T690A	151	FRONT DRIVING GEAR GROUP	CK30M-T280A	91
HST CONTROL 3 GROUP	CK30H-T700A	155	HST CASE GROUP	CK30H-T150A	62
HST CONTROL_1 GROUP	CK35H-T360A	127	HST CONTROL 1 GROUP	CK30H-T360A	99
HST EXTERNAL HYDRAULIC LINE GROUP	CK30H-T735A	167	HST OUTPUT SHAFT GROUP	CK30H-T190A	70
HST IN HYDRAULIC LINE GROUP	CK30H-T370A	131	MAIN SHAFT GROUP	CK30H-T180A	69
HYDRAULIC CYLINDER BODY GROUP	CK30ME-T630-2A	138	MAIN SHIFT FORK GROUP	CK30M-T310A	93
HYDRAULIC CYLINDER GROUP	CK30HE-T620-2A	136	MID CASE GROUP	CK30H-T160A	63
HYDRAULIC CYLINDER GROUP	CK30ME-T620-2A	137	MID CASE GROUP	CK30M-T160A	64
HYDRAULIC LIFT ARM GROUP	CK30M-T640A	139	MID PTO GROUP	1-30HE-T1055A	116
HYDRAULIC(1)GROUP	CK30H-T725B	163	MID PTO SHAFT GROUP	CK30M-T260A	86
HYDRULIC SYSTEM 1 GROUP	CK30ME-T650A	143	PTO DRIVE SHAFT GROUP	CK30H-T240A	79
HYDRULIC SYSTEM 2 GROUP	D360-T640A	140	PTO DRIVE SHAFT GROUP	CK30M-T240A	80
INLET TUBE GROUP	CK30H-T720-1A	159	PTO SHAFT GROUP	CK30H-T250A	81
INLET TUBE GROUP	CK30M-T720-1A	161	PTO SHAFT GROUP	CK30M-T250A	83
JOYSTICK VALVE GROUP	CK30H-T750A	170	PTO SHIFT LEVER GROUP	1-30H-T395A	101
JOYSTICK VALVE GROUP	CK30M-T750A	174	REAR AXLE GROUP	CK30M-T480A	114
JOYSTICK VALVE GROUP	CK35H-T750A	178	REAR DIFF SYSTEM GROUP	CK30M-T440A	104
JOYSTICK VALVE GROUP	CK35M-T750A	182	SHAFT 1 GROUP	CK30M-T210A	73
MAIN DISTRIBUTOR VALVE GROUP	CK30M-T680A	145	SHAFT 2 GROUP	CK30M-T220A	74
POWER STEERING CYLINDER GROUP	CK30H-T590A	134	SHUTTLE FORK GROUP	CK30M-T290A	92
POWER STEERING GROUP	CK30M-T590A	135	SHUTTLE SYSTEM GROUP	CK30M-T200A	71
REMOTE HYDRAULIC VALVE GROUP	CK30M-T760-2A	186	SPEED SHIFT FORK GROUP	CK30H-T230A	76
STEERING CYLINDER GROUP	CK30M-T580A	132	SPEED SHIFT FORK GROUP	CK30H-T330A	95
TOP LINK BRACKET GROUP	D360-T650A	144	SPEED SHIFT FORK GROUP	CK30M-T230A	78
<OPTION>			SPEED SHIFT FORK GROUP	CK30M-T330A	97
FRONT & REAR WHEEL GROUP	CT230-T1115B	362	SPRIAL BEVEL GEAR GROUP	CK30H-T270A	88
FRONT WEIGHT GROUP	EX40-T1065C	359	SPRIAL BEVEL GEAR GROUP	CK30M-T270A	89
FRONT WHEEL GROUP	CK30ME-T570A	348	TRANSMISSION CASE GROUP	CK30H-T170A	65
FRONT WHEEL GROUP	CK30M-T570A	347	TRANSMISSION CASE GROUP	CK30ME-T170A	67
MID PTO GROUP	CK30E-T1055B	356			
PIN SOCKET GROUP	CK30ME-T1020A	352			
REAR VIEW MIRROR GROUP	CK30ME-T1030A	353			
REAR WEIGHT GROUP	EX40-T1075B	360			
Rear Weights Group(Option)	EX40-T1075C	361			
REAR WHEEL GROUP	CK30ME-T490A	345			
REAR WHEEL GROUP	CK30M-T490A	344			
REAR WHEEL GROUP	DK45HSE-T495A	346			
REMOTE HYDRAULIC LEVER GROUP	CK30M-T767-4A	349			
SUN ROOF GROUP	CK30M-T1040A	354			
TOWING HOOK GROUP	CK30E-T2000B	363			
TURF TIRES GROUP	CK30E-T1000A	351			
WORKING LIGHT A GROUP	CK30M-T1050A	355			
<TRANSMISSION>					
AUX SPEED SHIFT LEVER GROUP	1-30ME-T345A	98			
BRAKE CASE GROUP	CK30ME-T460A	110			
BRAKE CASE GROUP	CK30M-T460A	108			