our **power**, your **passion**

NIBBI BRIK 1

(EN 709 - ÅRG. 2012 OG FREM)

Henrik A. Fog A/S Lyngager 5-11 2605 Brøndby Tel 43966611 Fax 43266624
reservedele@hafog.dk
www.hafog.dk

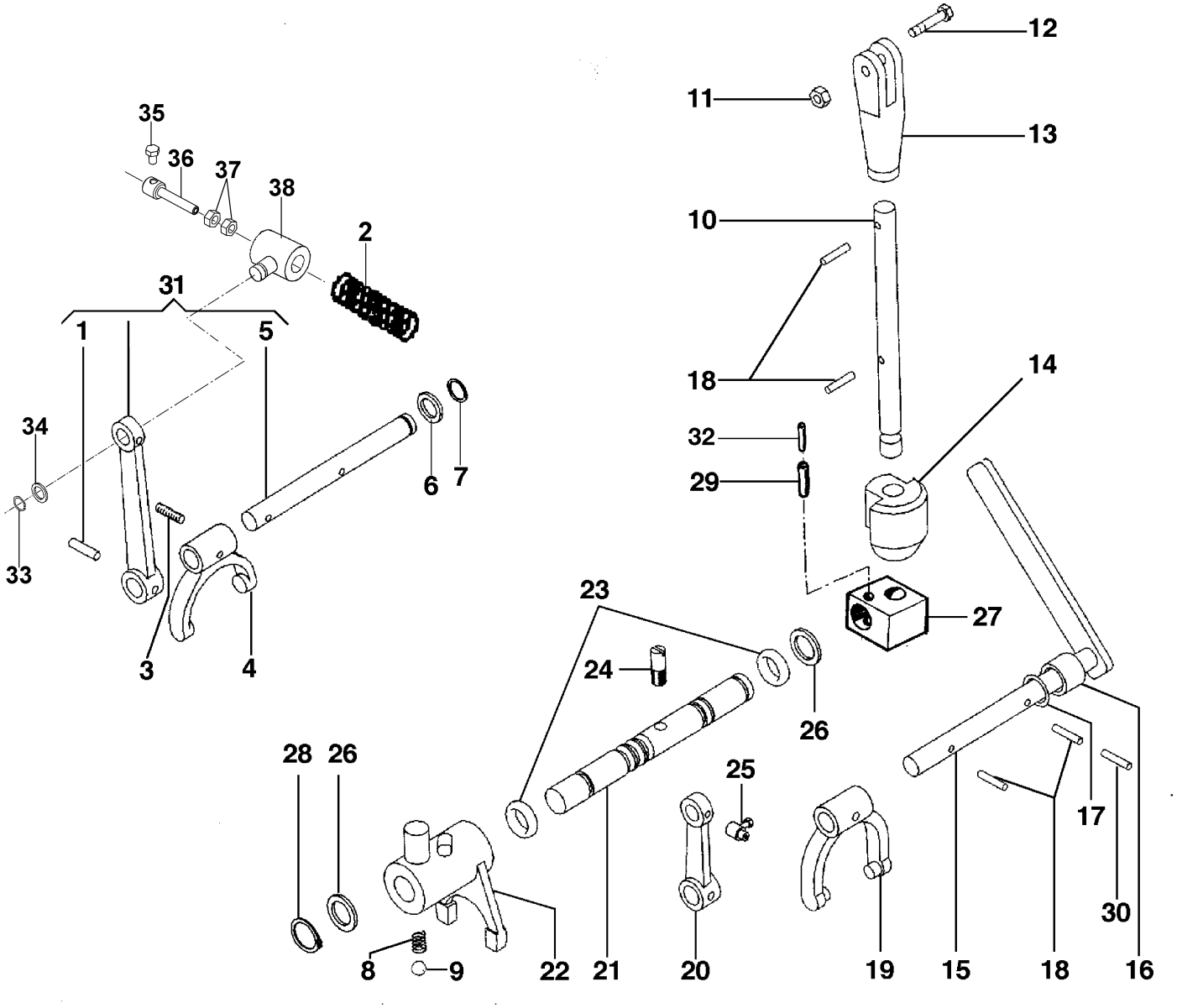
35
36
37
38
2
31
1
5
34
33
6
7
3
4
12
11
13
10
18
14
32
29
27
23
24
26
28
26
25
17
30
8
9
22
21
20
19
15
18
16

Ref.Nu	Qty	Part number	Description	Validity from	Validity till	Notes	Bulletin
1	1	N5113800	Pin				
2	1	68310058	Spring				
3	1	K3501070	Screw				
4	1	YK3500940	Clip				
5	1	K3500950	Control rod				
6	1	N5001700	Washer				
7	1	3024012	Ring				
8	1	N3101500	Spring				
9	1	N4743200	Ball				
10	1	F1241613	Lever				
11	1	3914006R	Nut				
12	1	3801024	Screw				
13	1	F1241619	Bushing				
14	1	YF1241614	Shoe				
15	1	F1241623	Shaft (Complete)				
16	1	N0403000	Bushing				
17	1	3916012	Washer				
18	1	N5113800	Pin				
19	1	K3500140	Clip				
20	1	K3500510	Lever				
21	1	F1241615E	Shaft				
22	1	F1250860D	Clip				
23	1	YN0306000	O-ring				
24	1	F1250816C	Screw				
25	1	N5901500	Clamp				
26	1	N5002610	Washer				
26	1	N5002600	Washer				
27	1	YF1241616	Support				
28	1	3024016R	Seeger				
29	1	N5126100	Pin				
30	1	N5101450	Pin				
31	1	YF1250856	Control rod				
32	1	N5109400	Pin				
33	1	3024010R	Seeger				
34	1	3916010R	Washer				
35	1	302000024	Screw				
36	1	68320148	Retainer (Wire)				
37	2	034000013	Nut				
38	1	68310056	Retainer (Wire)				

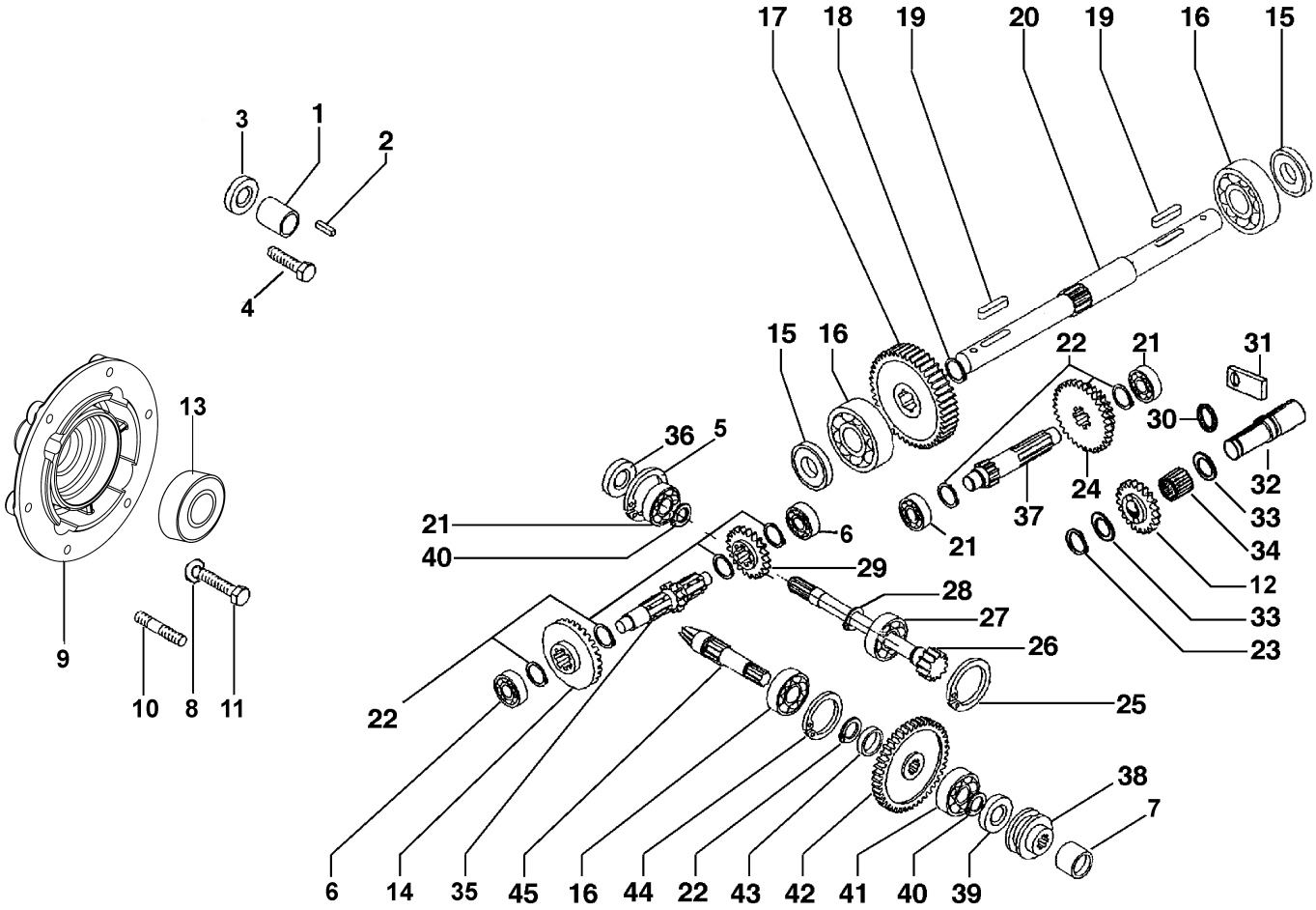
17
18
19
20
19
16
15
3
1
2
4
15
16
22
21
31
13
36
5
30
32
24
33
21
37
6
21
34
40
29
12
28
33
27
23
26
9
25
10
8
11
22
38
7
6
14
35
45
16
44
22
43
42
41
40
39

Ref.Nu	Qty	Part number	Description	Validity from	Validity till	Notes	Bulletin
1	1	F1250008	Spacer			Honda GX160; B&S; Tecumseh	
2	1	YN0643450	Key			Honda; B&S; Tecumseh	
3	1	YN1263201	Bearing			Honda GC160	
4	1	YN6195100	Screw			Tecnamotor	
4	1	3803009R	Screw			GC160; GX160; B&S; Vanguard	
5	1	3025022R	Seeger				
6	1	094000006R	Bearing				
7	1	YF1250859	Shaft joint			Solo per versioni speciali: cambio veloce, lato attrezzo; Only for special version: speed gear, tool side	
8	1	YN4365400	Washer			Honda; B&S; Tecumseh	
9	1	68310038A	Flange			Honda GX160	
10	1	YN3812500	Stud			Honda; B&S; Tecumseh	
11	1	YN6243980	Screw			Honda; B&S; Tecumseh	
12	1	F1240805	Gear				
13	1	N1289300	Bearing				
14	1	YF1250810	Rim				
15	1	YN0207300	Seal ring				
16	1	N1263100	Bearing				
17	1	F1250813	Gear				
17	1	F1250819	Gear			Cambio veloce; Speed gear	
18	1	YN0118500	Seeger				
19	1	YK7811007	Key				
20	1	F1250814	Axle				
21	1	YN1257000	Bearing				
22	1	3024020R	Seeger				
23	1	3024012	Ring				
24	1	YF1240801	Gear				
25	1	YN0130000	Seeger				
26	1	YF1240800	Shaft				
27	1	YN1258800	Bearing				
28	1	YN0112700	Seeger				
29	1	F1240804	Gear				
30	1	YN0306000	O-ring				
31	1	F1240803	Plate				
32	1	F1240806	Pin				
33	2	N5001750	Washer				
34	1	3037026R	Roller cage				
35	1	F1250811	Shaft				
36	1	N0204850	Ring				
37	1	F1250812	Gear				
37	1	F1250818	Gear			Cambio veloce; Speed gear	
38	1	F1250805	Bushing				
38	1	F1250851	Bushing			Solo per versioni speciali: cambio veloce; Only for special version: speed gear	
39	1	K7032002	Ring				
40	1	3024015	Seeger				
41	1	N1257700	Bearing				
42	1	F1250804	Gear				
43	1	F1250808	Spacer				
44	1	YN0130900	Seeger				
45	1	F1250809	Sprocket				

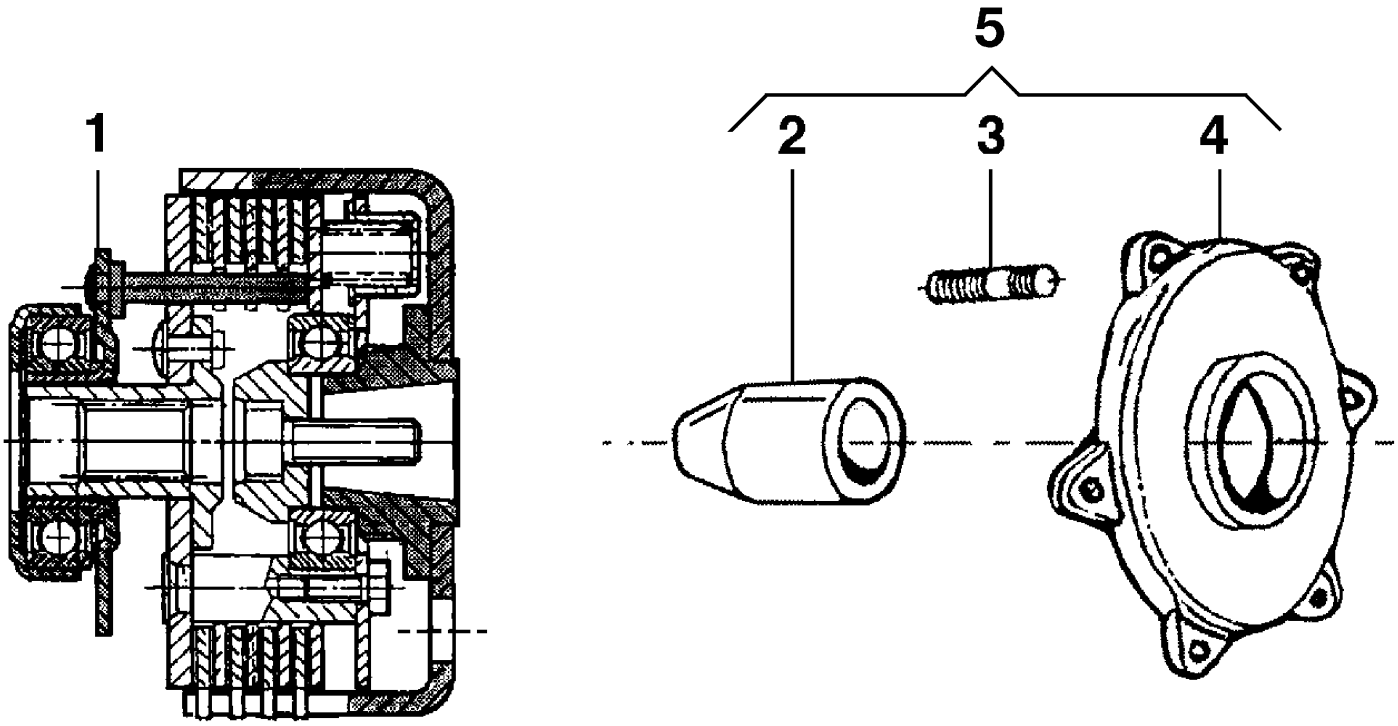
1
5
2
3
4

Ref.Nu	Qty	Part number	Description	Validity from	Validity till	Notes	Bulletin
1	1	68310040	Clutch 3 disk			Inversa; Reverse; Motori europei; European engines; Yanmar L48	
1	1	68310041	Clutch 3 disk			Inversa; Reverse; GX160; GX200; B&S; Robyn EX17; Kohler CS6	
1	1	68310042	Clutch 3 disk			Inversa; Reverse; 15LD225/315	
2	1	F1210002	Spacer			15LD225/315	
3	1	K8236004	Stud			15LD225/315	
3	1	N3815300	Stud			Motori senza distanziale; Engines without spacer	
4	1	F1210001	Spacer			15LD225/315	
5	1	P1200020	Spacer unit			15LD225/315	

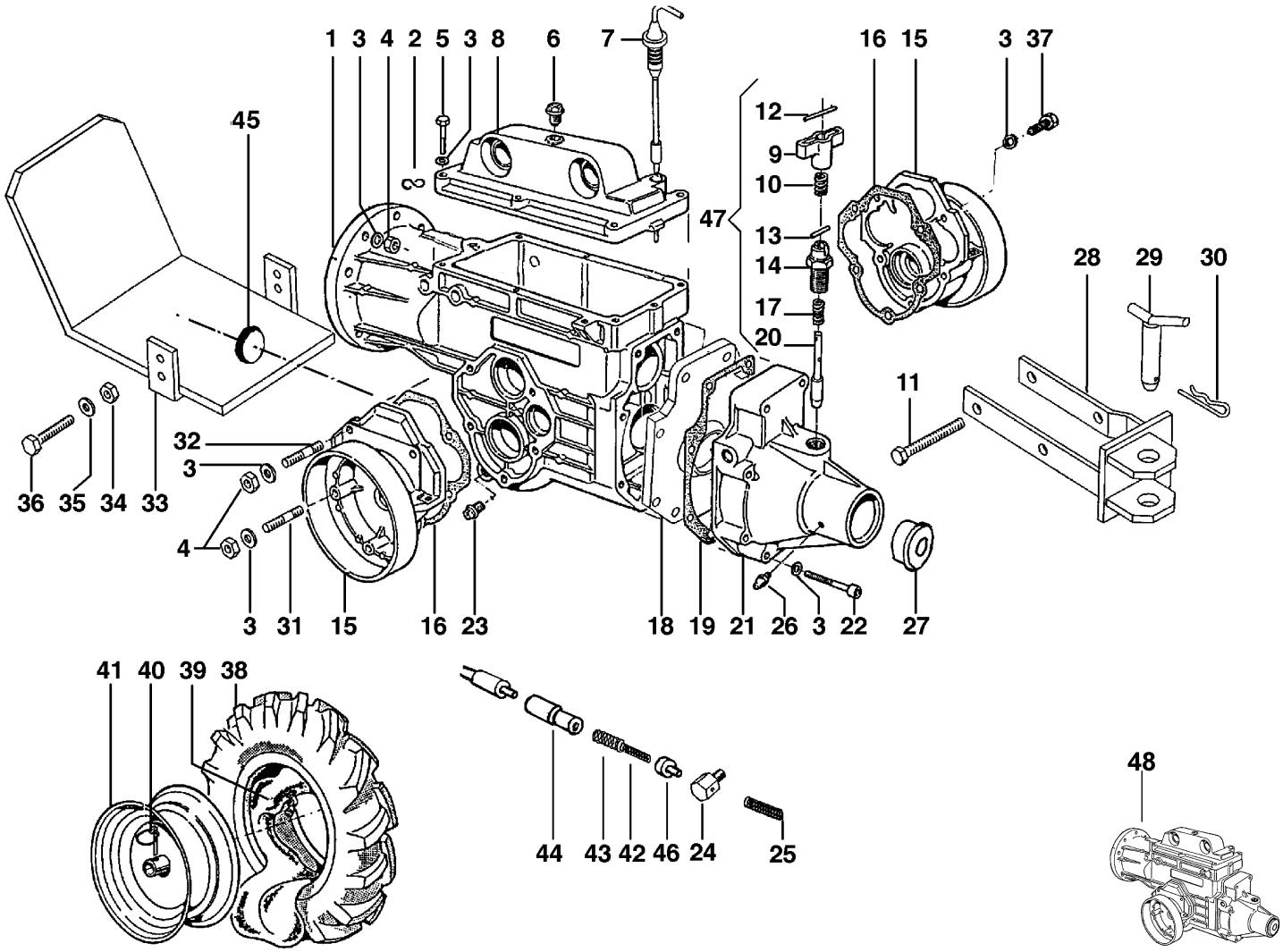
1 3 4 2 5 3 8 6 7
16 15 3 37
45
12
9
10
47
13
14
17
20
28 29 30
11
32
3
36 35 34 33
4
3 31 15 16 23 18 19 21 26 3 22 27
41 40 39 38
44 43 42 46 24 25
48

Ref.Nu	Qty	Part number	Description	Validity from	Validity till	Notes	Bulletin
1	1	F1250822	Speed-change gear box				
2	1	F0005621	Hook				
3	1	YN4365400	Washer				
4	1	320000028R	Nut				
5	1	3806067R	Screw				
6	1	N5253930	Cap				
7	1	YK3500410	Rod				
8	1	K3500400	Cover				
9	1	K3500330A	Knob				
10	1	K7903016	Spring				
11	1	YN6361500	Screw				
12	1	N5106600	Pin				
13	1	3022012	Pin				
14	1	F1250843	Shutter				
15	1	K3500420	Cover (Wheel)				
16	1	K3500470	Gasket				
17	1	YK3503360	Spring				
18	1	F1250806	Flange				
19	1	K3500460	Gasket				
20	1	F1250842	Shutter				
21	1	YF1250807	Support				
22	1	YN6291000	Screw				
23	1	K8536001	Cap				
24	1	F1241618	Retainer (Sheath)				
25	1	K7903009	Spring				
26	1	N2603800	Nipple				
27	1	321000001	Cap				
28	1	L0060900	Towing hitch				
29	1	F0751647	Pin				
30	1	N5148800	Cotter pin				
31	1	N3825650	Stud				
32	1	N3813200	Stud				
33	1	F1052122	Guard			A220	
33	1	68640018	Guard			Honda GX160; Tecnamotor; Kohler; Grigio; Grey	
33	1	F1182112	Guard			LGA225	
33	1	68910042R	Guard			15LD315; Grigio; Grey	
33	1	F1202133	Guard			B&S	
34	1	320000028R	Nut				
34	1	006000091R	Nut			15LD315	
35	1	YN4365400	Washer				
35	1	YN4376400	Washer			15LD315	
36	1	3806074R	Screw			B&S; Honda; Tecnamotor; Kohler	
36	1	3806063	Screw			A220; LGA225	
36	1	YN6335900	Screw			15LD315	
37	1	3806067R	Screw				
38	1	K8201001	Tire			3.50-6	
38	1	YN4851600	Tire			4.00-8	
39	1	K7181001	Inner tube			3.50-6	
39	1	N4881100	Inner tube			4.00-8	
40	1	YK8514001	Pin				
41	1	69200043	Rim			3.50-6	
41	1	69200044I	Rim			4.00-8	
42	1	K7903004	Spring				
43	1	K7903018	Spring				
44	1	YK1101850	Spring holder				
45	1	YN5265050	Cap				
46	1	YN5852100A	Clamp				
47	1	YR0000127	Set shutter				
48	1	P0001564D	Unit (Gear)				

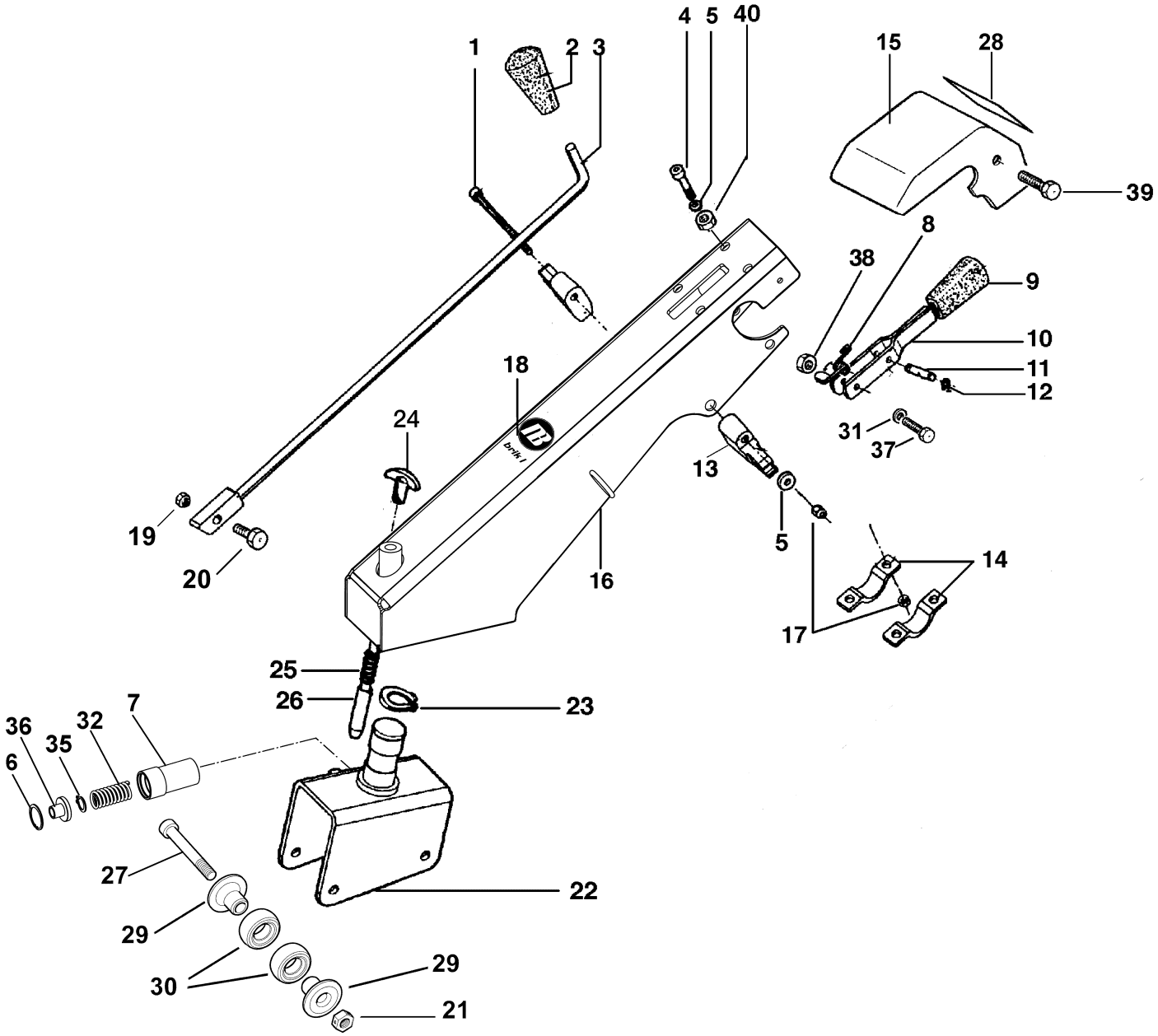
1
2
3
4
5
40
15
28
39
8
38
9
10
11
12
18
24
31
37
13
5
19
20
16
14
17
25
26
23
7
36
35
32
6
27
22
29
30
29
21

Ref.Nu	Qty	Part number	Description	Validity from	Validity till	Notes	Bulletin
1	1	3806076	Screw				
2	1	YN3753600	Knob				
3	1	F1251626	Rod				
4	1	N6289250	Screw				
5	1	3916008R	Washer				
6	1	3025027	Seeger				
7	1	68320116R	Bushing				
8	1	YF1291634B	Spring				
9	1	YN2840480	Knob				
10	1	YF1291636	Lever				
11	1	-	Not available for this product				
12	1	-	Not available for this product				
13	1	YF1255009B	Support				
14	1	YF1151601	Clamp				
15	1	68240022	Cover				
16	1	68240049A	Handlebar rod (Red)			Rosso; Red	
17	1	3914010R	Nut				
18	1	68310022	Mark			Su richiesta; Upon request	
19	1	3914006R	Nut				
20	1	3801024	Screw				
21	1	YN1463650	Nut				
22	1	68310045	Column support (Set)			Rosso; Red	
23	1	N0124100	Seeger				
24	1	YN3753000	Knob				
25	1	YK3503360	Spring				
26	1	YF1251637	Shutter				
27	1	YN6357200	Screw				
28	1	F1241627	Mark			Su richiesta; Upon request	
29	1	YK3501080	plate				
30	1	YK0300910	Shock absorber				
31	1	3916010R	Washer				
32	1	N3119560	Spring				
35	1	3024012	Ring				
36	1	68310057	Washer				
37	1	YN6361500	Screw				
38	1	3914014R	Nut				
39	1	YN6243651	Screw				
40	1	3914010R	Nut				

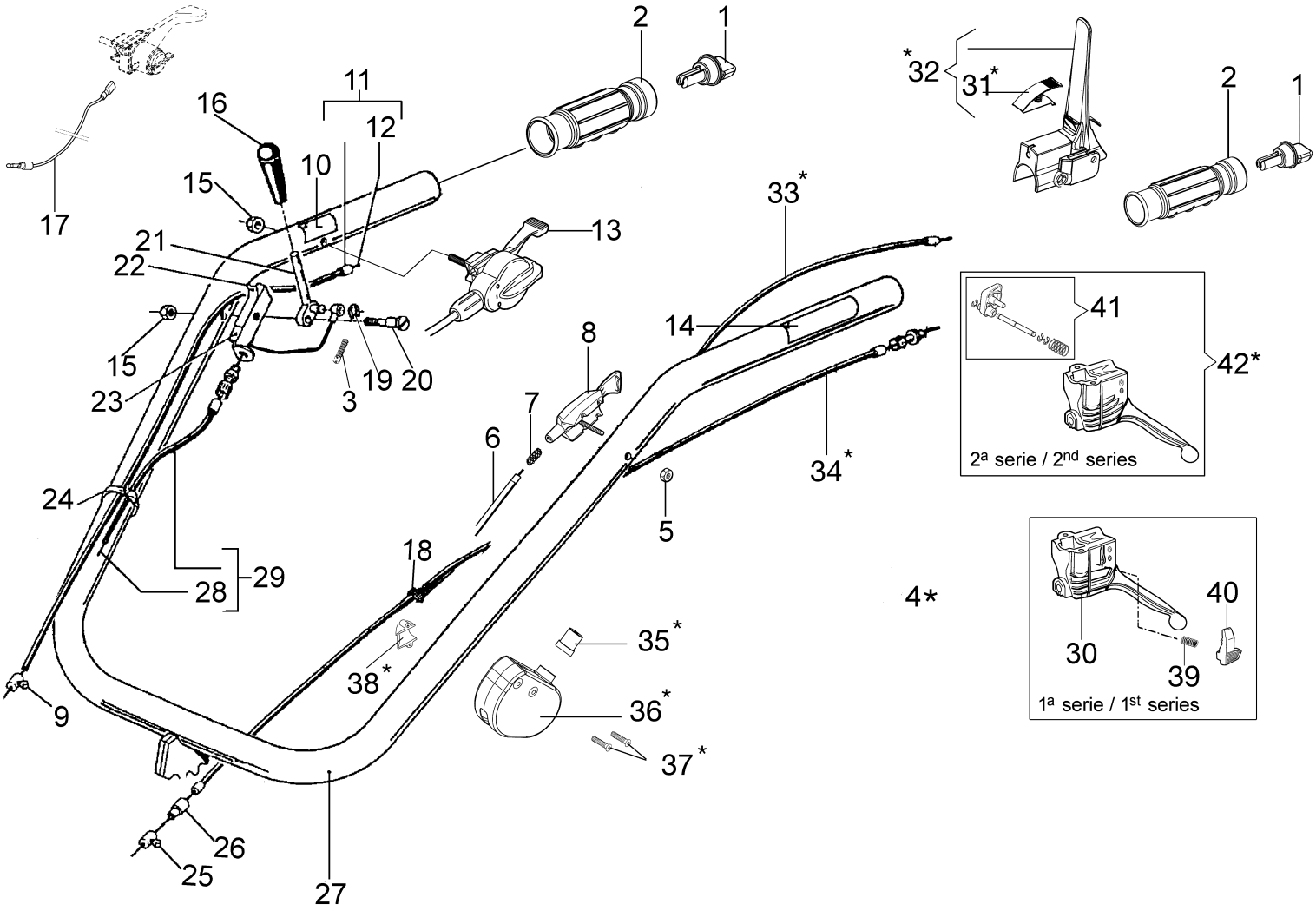
2
1
*32
31*
2
1
11
16
12
10
15
17
21
22
13
33*
41
42*
15
23
3
19
20
8
14
7
6
34*
2ª serie / 2nd series
24
5
18
29
28
4*
40
30
39
1ª serie / 1st series
35*
38*
36*
9
37*
26
25
27

Ref.Nu	Qty	Part number	Description	Validity from	Validity till	Notes	Bulletin
1	1	68320127	Extension				
2	1	68320126R	Knob				
3	1	YF1370387	Guard				
4	1	68310047A	Lever group	SN B043246134			BT12-006-02/14
5	1	3914006R	Nut			Per motori diesel; For Diesel engine	
6	1	N5476030	Transmission			Per motori diesel; For Diesel engine	
7	1	68320134	Spring			Per motori diesel; For Diesel engine	
8	1	68320132	Lever (Stop)			Per motori diesel; For Diesel engine	
9	1	YN5901000	Clamp				
10	1	YN5380805	Mark (Accelerator)			Su richiesta; Upon request	
11	1	YN5462710	Bowden cable			15LD315	
11	1	YN5462705	Transmission			Micro 51	
11	1	N5464000	Transmission			Tutte le versioni; All the versions; Motore Robyn; Robyn engine	
12	1	N5614500	Rope				
12	1	N5611200	Rope			15LD315	
13	1	3044010R	Set (Cable Motor-stop - Fuel control - Button)	SN B043456555		Per motori bezina; For gasoline engine	BT12-008-03/14
13	1	YN2803650	Fuel control			Per motori diesel; For Diesel engine	
13	1	YN2803660	Fuel control			Per motori benzina; For gasoline engine	
14	1	YN5380870	Mark (Instruction)			Su richiesta; Upon request	
15	1	3914006R	Nut				
16	1	YN3752300	Knob				
17	1	68310059	Cable		SN B043456554	Per motori benzina; For gasoline engine	BT12-008-03/14
18	1	YN1762150	Band				
19	1	3024008	Seeger				
20	1	YF1061613	Pin				
21	1	YF1091657	Lever				
22	1	F1091690	Mark			Su richiesta; Upon request	
23	1	F1091687	Support				
24	1	YN1764000	Band				
25	1	N5901500	Clamp				
26	1	YN5852100A	Clamp				
27	1	68910082	Handle kit				
28	1	N5649008	Rope				
29	1	YN5515845A	Transmission				
30	1	68310063	Lever		SN B043246133		BT12-006-02/14
31	1	68240053	Hook + Pin				
32	1	68310061	Complete lever				
33	1	68310062	Rope				
34	1	68310064R	Rope				
35	1	68310066	Bushing				
36	1	68310065	Device Quick start				
37	2	68310068	Pin				
38	1	68310067	Clamp				
39	1	68310074	Spring		SN B043246133		BT12-006-02/14
40	1	68310073	Button		SN B043246133		BT12-006-02/14
41	1	68320198R	Button set	SN B043246134			BT12-006-02/14
42	1	68320199R	Complete lever	SN B043246134			BT12-006-02/14

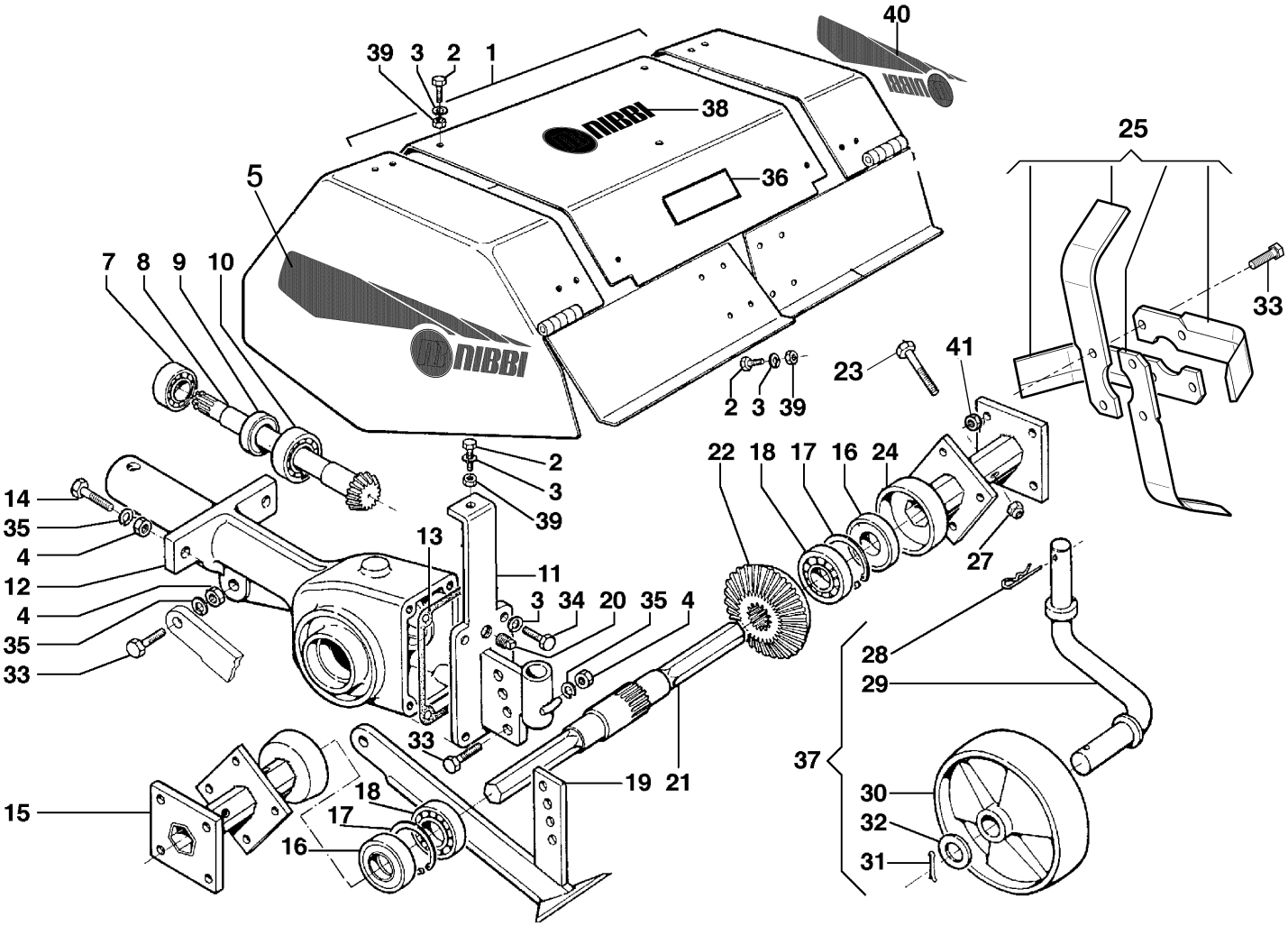
40
39 3 2 1
38
25
5
36
7 8 9 10
33
41
23
2 3 39
2
3
39
22 18 17 16 24
14
35
4
12
4
35
33
13
11
27
3 34 20 35 4
28
29
33
37
19 21
15
18
17
16
30
32
31

Ref.Nu	Qty	Part number	Description	Validity from	Validity till	Notes	Bulletin
1	1	P0001768	Hood			35÷50÷60 cm (Per restringimento a 35 cm necessita di L0116300; L0116300 needed to reduce to 35 cm)	
1	1	P0001769	Hood			35÷50 cm	
2	1	3806063	Screw				
3	1	N4364350	Washer				
4	1	YN1457300	Nut				
5	1	68320080	Mark			Su richiesta; Upon request; SX; LEFT	
7	1	YN1257600	Bearing				
8	1	YF0017201	Sprocket				
9	1	YN0207300	Seal ring				
10	1	YN1263701	Bearing				
11	1	68310060	Support				
12	1	F0017200	Housing				
13	1	K3501840	Gasket				
14	1	3806067R	Screw				
15	1	L0116300	Kit containing pair of spacers to limit the rotor width to			35 cm	
15	1	F0017210	Hub			50÷60 cm	
15	1	F0017226	Hub			35÷50 cm	
16	1	N0209800	Ring				
17	1	N0134200	Seeger				
18	1	N1269800	Bearing				
19	1	69210091R	Plough				
20	1	K8535002	Cap				
21	1	K3501750	Shaft				
22	1	F0017202	Rim				
23	1	3806076	Screw				
24	1	L0116300	Kit containing pair of spacers to limit the rotor width to			35 cm	
24	1	F0017210	Hub			50÷60 cm	
24	1	F0017226	Hub			35÷50 cm	
25	1	R0000148	Cutters kit			Per fresa 50 cm, kit composto da: 10pz di K3501790 (coltello DX) + 10pz. di K3501780 (coltello SX) ; For tiller 50 cm, set composed by: 10pcs of K3501790 (RIGHT knife) + 10pcs of K3501780 (LEFT knife)	
25	1	R0000139	Cutters kit			Per fresa 60/70 cm, kit composto da: 10pz di F0017002 (coltello DX) + 10pz. di F0017003 (coltello SX) ; For tiller 60/70 cm, set composed by: 10pcs of F0017002 (RIGHT knife) + 10pcs of F0017003 (LEFT knife)	
27	1	N1458800	Nut				
28	1	N1054500	Cotter pin				
29	1	K3501830	Support				
30	1	YK1102480	Wheel				
31	1	YN1060200	Cotter pin				
32	1	3916020	Washer				
33	1	3806067R	Screw				
34	1	N6249300	Screw				
35	1	3819013R	Grower				
36	1	F0015577	Mark (Danger)			Su richiesta; Upon request	
37	1	Z0020368	Support wheel				
38	1	68610007	Mark			Su richiesta; Upon request	
39	1	320000028R	Nut				
40	1	68320079	Mark			Su richiesta; Upon request; DX; RIGHT	
41	1	YN1457570	Nut				

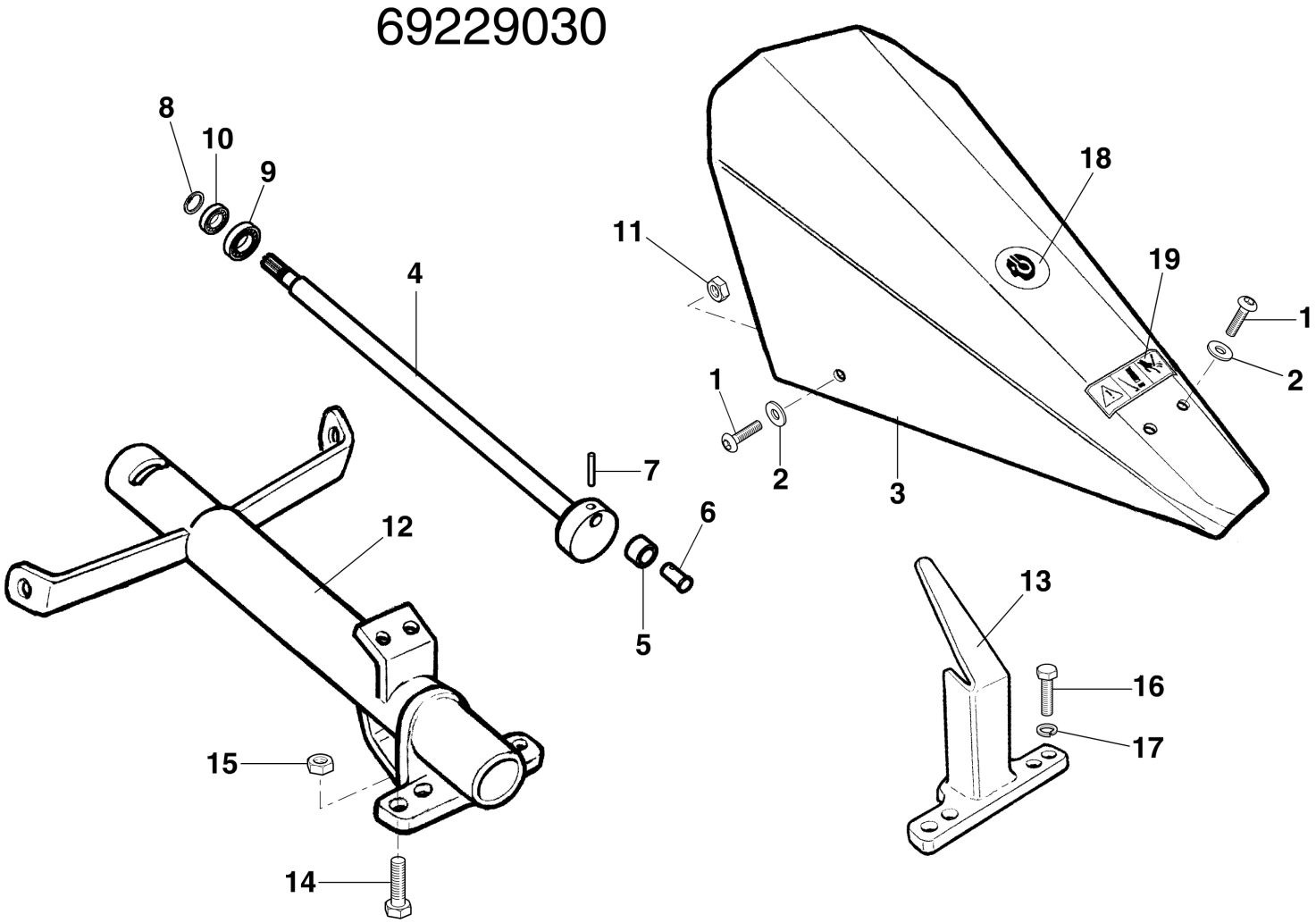
69229030
8
10
9
4
11
18
19
1
2
1
2
3
7
6
5
12
13
16
17
15
14

Ref.Nu	Qty	Part number	Description	Validity from	Validity till	Notes	Bulletin
1	4	N6259750	Screw				
2	4	CV020053	Washer				
3	1	CV013714	Hood				
4	1	CV014095	Shaft				
5	1	F1053337	Roller				
6	1	F1053336	Pin				
7	1	CV023660	Pin				
8	1	YN0112700	Seeger				
9	1	300081031	Bearing				
10	1	YN1258020	Bearing				
11	4	3914010R	Nut				
12	1	CV013716	Support				
13	1	CV014080	Clutch driver				
14	4	N6333300	Screw				
15	4	CV020484	Nut				
16	2	YN6255400	Screw				
17	2	CV024132	Washer				
18	1	N5383405	Mark (Protection)			Su richiesta; Upon request	
19	1	N5381650	Mark (Danger)			Su richiesta; Upon request	

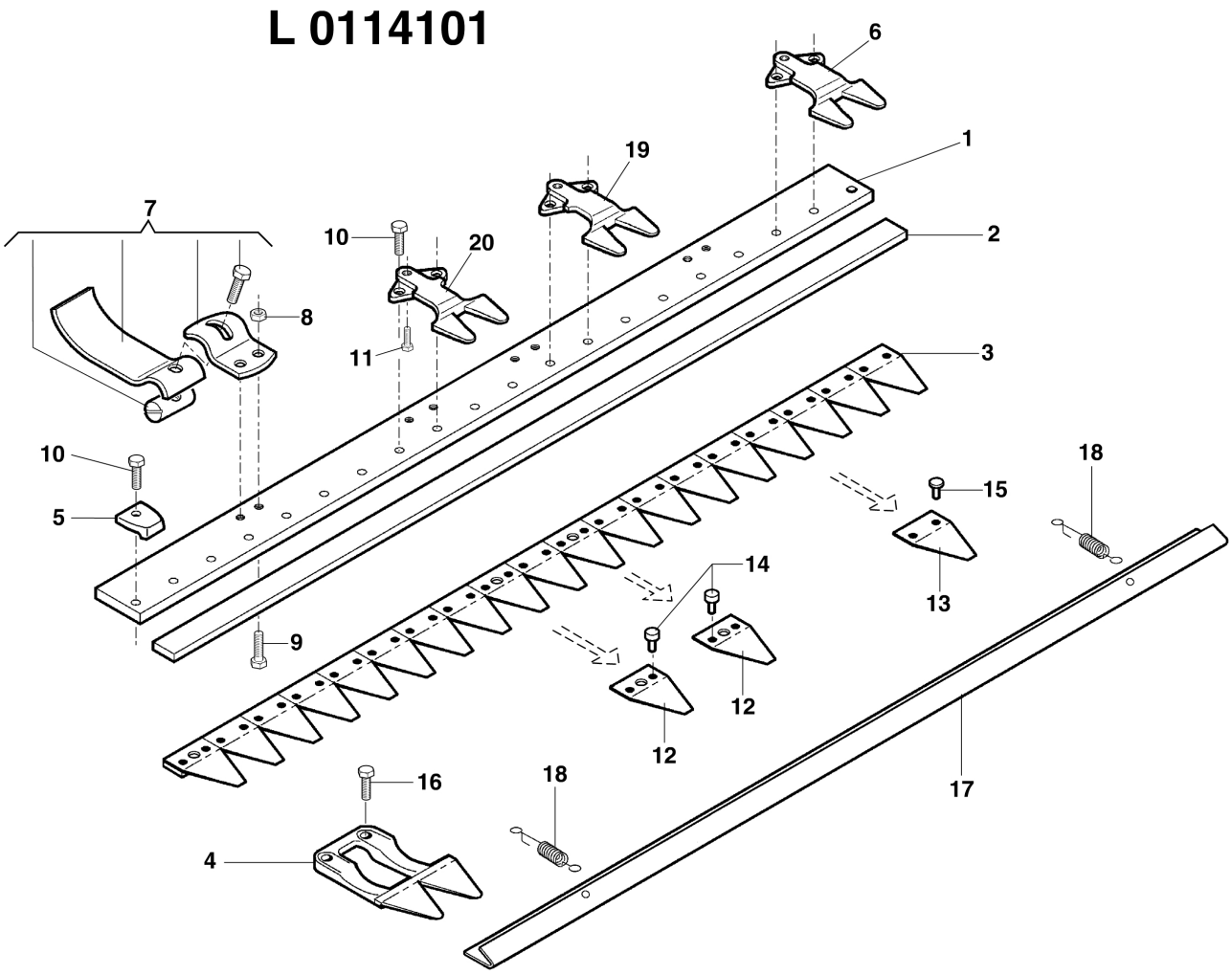
L 0114101
6
1
19
7
10
20
2
8
11
3
10
18
15
5
14
13
9
12
12
16
18
17
4

Ref.Nu	Qty	Part number	Description	Validity from	Validity till	Notes	Bulletin
1	1	CV014096	Bar			102 cm	
2	1	F0712027	Slide				
3	1	YF1073349	Blade			100 cm	
4	10	F1113114	Tooth (Double)				
5	4	YF0582687	Plate				
6	4	F1113112	Press blade (Long)				
7	2	R1503545	Sole				
8	4	3914010R	Nut				
9	4	3806067R	Screw				
10	16	N6333300	Screw				
11	6	N6245800	Screw				
12	3	YF1073273	Blade				
13	16	F1073216R	Blade				
14	2	F1073261	Rivet				
15	36	YN0886600	Rivet				
16	4	YN6325400	Screw				
17	1	CV013593	Guard				
18	2	F0742013	Hook				
19	1	F1253048	Press blade			SX; LEFT	
20	1	F1253047	Press blade			DX; RIGHT	

L 0125101

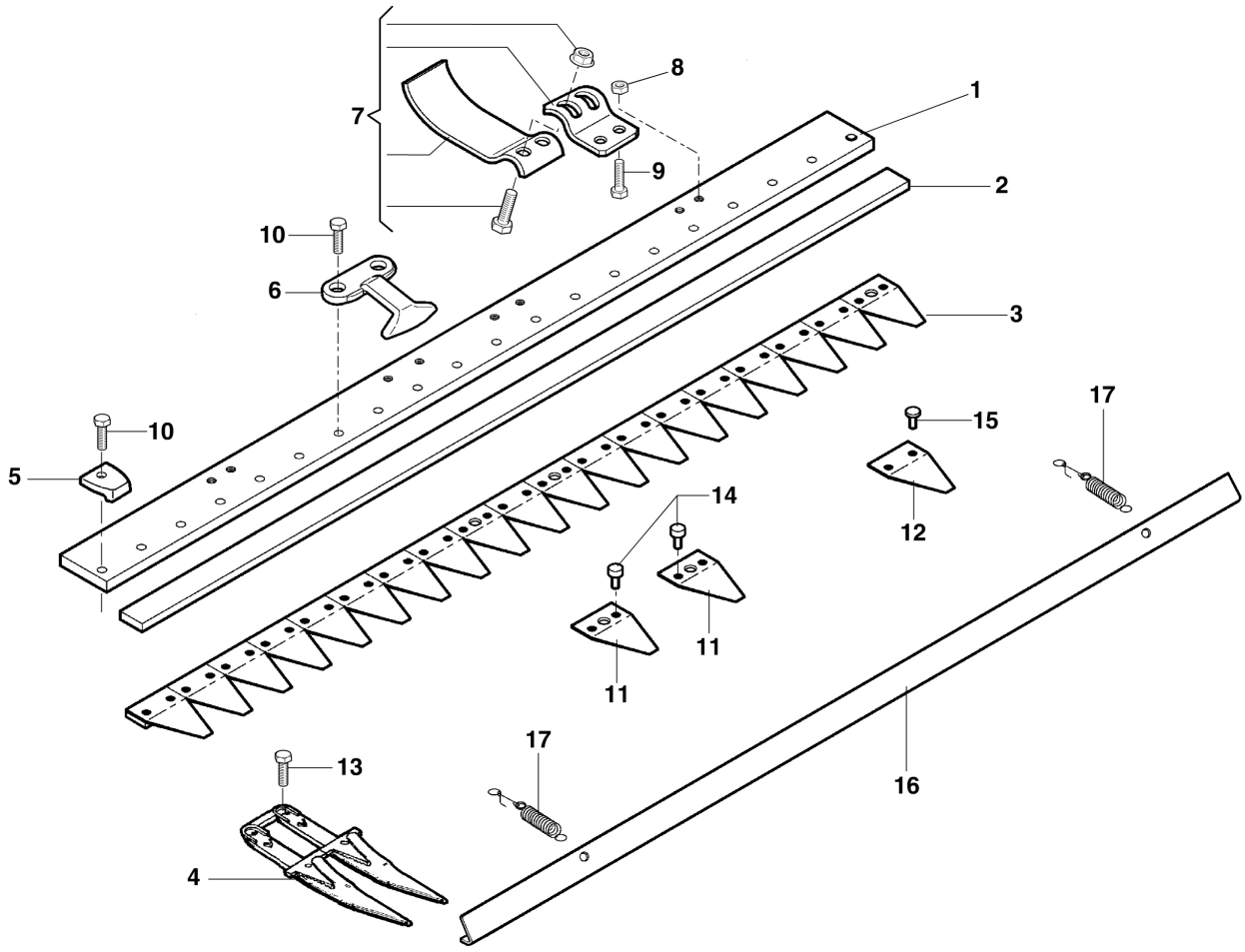

Ref.Nu	Qty	Part number	Description	Validity from	Validity till	Notes	Bulletin
1	1	CV014096	Bar			102 cm	
2	1	F0712027	Slide				
3	1	YF1073349	Blade			100 cm	
4	6	F0582688	Tooth (Double)				
5	4	YF0582687	Plate				
6	10	F0582685	Press blade (Long)				
7	2	R1503545	Sole				
8	4	3914010R	Nut				
9	4	3806067R	Screw				
10	16	N6333300	Screw				
11	3	YF1073273	Blade				
12	16	F1073216R	Blade				
13	4	YN6325400	Screw				
14	2	F1073261	Rivet				
15	36	YN0886600	Rivet				
16	1	CV013593	Guard				
17	2	F0742013	Hook				

our **power**, your **passion**

BOLLETTINO - BULLETIN

TECNICO • TECHNICAL	●	GRUPPO • GROUP	**12**
RICAMBI • SPARE PARTS	●	NR • NO	**006**
INFORMAZIONI • INFORMATION		DATA • DATE	**02-14**

GENERALE - RICAMBI - GARANZIA General - Spares - Warranty	-1-	ACCESSORI Accessories	-2-	PRODOTTI DI COMPLEMENTO Other products	-6-	MOTOZAPPE Rotary tillers	-9-
TRINCIASARMENTI Flail mowers	-10-	TRANSPORTER	-11-	MOTOCOLTIVATORI Rotary cultivators	-12- ●		

I

MODELLI: Motocoltivatori BRIK1 - BRIK3 - KAM4 - KAM5

OGGETTO: Leva comando frizione

DESCRIZIONE: Miglioramento prodotto. Modificato il sistema di blocco sulla leva frizione.

INTERCAMBIABILITÁ: Sì, utilizzando il kit cod.68320199R. Particolari singoli, no.

DISPONIBILITÀ RICAMBI: La leva premodifica verrà fornita ad esuarimento mentre pulsante di blocco premodifica e relativa molla continuano ad essere disponibili.

DECORRENZA: 11/08/13, matr.B043246134 *(BRIK1 - BRIK3);* 18/08/13, matr.B053329010 *(KAM4 - KAM5)*

NOTE: A seguito della modifica, il codice kit leva completo prende la variante alfabetica "A".

GB

MODELS: BRIK1 - BRIK3 - KAM4 - KAM5 rotary cultivators

SUBJECT: Control clutch lever

DESCRIPTION: Product improvement. Changed the locking system on the clutch lever.

INTERCHANGEABILITY: Yes, using the kit p/n 68320199R. Single parts, no.

PARTS AVAILABILITY: Old lever will be supplied until end of the stock while the old locking button and relative spring continue to be available to spare.

CUT-IN DATE: 11/08/13, serial n° B043246134 *(BRIK1 - BRIK3);* 18/08/13, serial n° B053329010 *(KAM4 - KAM5)*

NOTES: After the improvement, the p/n for complete kit lever get the letter "A".

PREMODIFICA - OLD ASSY

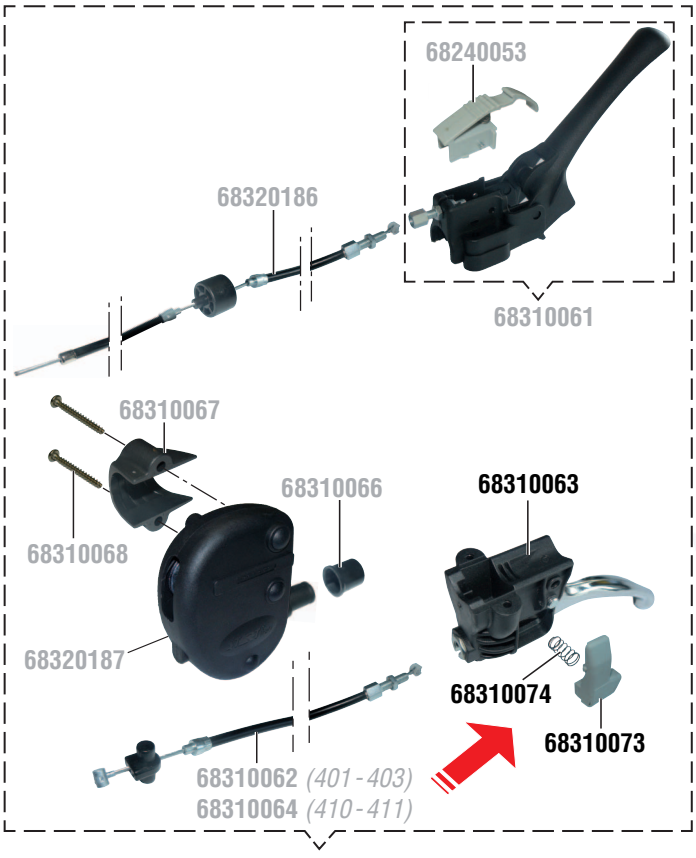

68310047 *(BRIK1 - BRIK3)*
68320136 *(KAM4 - KAM5)*

POSTMODIFICA - NEW ASSY

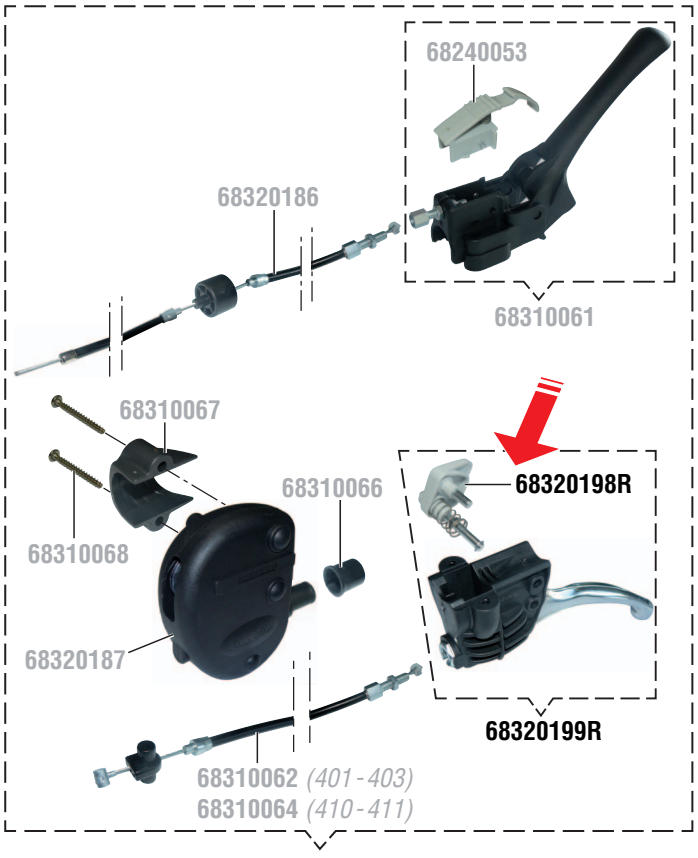

68310047A *(BRIK1 - BRIK3)*
68320136AR *(KAM4 - KAM5)*

our **power**, your **passion**

BOLLETTINO - BULLETIN

TECNICO • TECHNICAL	●	GRUPPO • GROUP	**12**
RICAMBI • SPARE PARTS	●	NR • NO	**008**
INFORMAZIONI • INFORMATION		DATA • DATE	**03-14**

GENERALE - RICAMBI - GARANZIA General - Spares - Warranty -1-	ACCESSORI Accessories -2-	PRODOTTI DI COMPLEMENTO Other products -6-	MOTOZAPPE Rotary tillers -9-
TRINCIASARMENTI Flail mowers -10-	TRANSPORTER -11-	MOTOCOLTIVATORI Rotary cultivators -12- ●	

I

MODELLI: Motocoltivatori MAK16 - BRIK1 - BRIK3 - KAM4 - KAM5 - KAM5HF - KAM5JUNIOR

OGGETTO: Interruttore arresto motore

DESCRIZIONE: Introdotto un nuovo interruttore d'arresto motore. Compatibile su modelli equipaggiati con motori Honda GX270 / GX340 versioni T1 e H (cavetto singolo), Honda GX160 - GC160 - GX200, Emak K800H, Kohler CH270 - CH395.

INTERCAMBIABILITÁ: Sì.

DISPONIBILITÀ RICAMBI: L'interruttore premodifica verrà fornito ad esaurimento; il cavetto premodifica continua ad essere disponibile.

DECORRENZA: *(MAK16)* 03/03/14, matr.B034100001 *(BRIK1 - BRIK3)* 08/11/13, matr.B043456555
(KAM4 - KAM5 - KAM5HF - KAM5JUNIOR) 01/11/13, matr.B053449246

GB

MODELS: MAK16 - BRIK1 - BRIK3 - KAM4 - KAM5 - KAM5HF - KAM5JUNIOR Rotary cultivators

SUBJECT: Engine stop switch

DESCRIPTION: Introduced a new engine stop switch. Compatible on models equipped with Honda GX270 / GX340 version T1 e H (single cable), Honda GX160 - GC160 - GX200, Emak K800H, Kohler CH270 - CH395 engine.

INTERCHANGEABILITY: Yes.

PARTS AVAILABILITY: Old switch will be supplied until end of the stock; the old cable continue to be available.

CUT-IN DATE: *(MAK16)* 03/03/14, serial n° B034100001 *(BRIK1 - BRIK3)* 08/11/13, serial n° B043456555
(KAM4 - KAM5 - KAM5HF - KAM5JUNIOR) 01/11/13, serial n° B053449246

PREMODIFICA - OLD ASSY

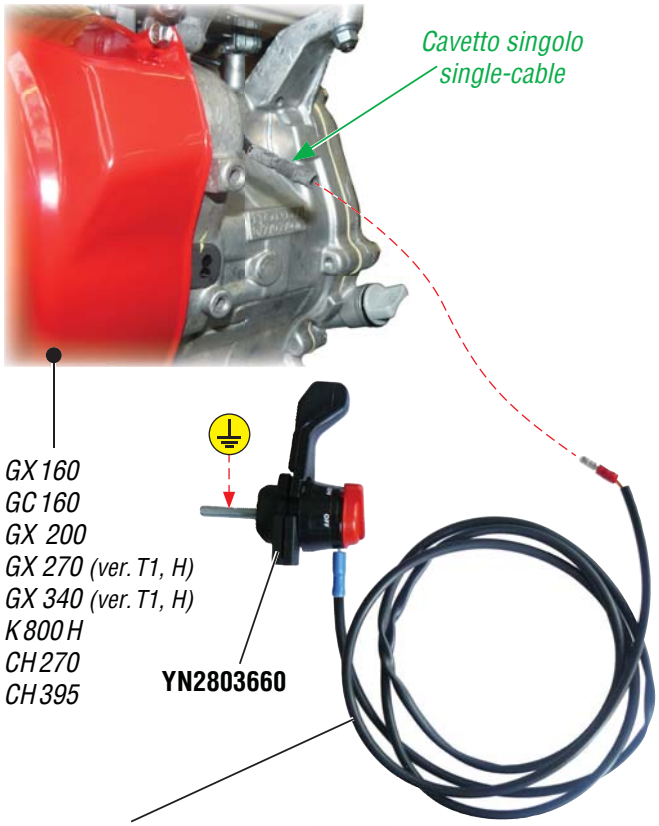

(MAK16) **68330113**
(BRIK1 - BRIK3 - KAM4 - KAM5 - KAM5HF - KAM5JUNIOR) **68310059**

POSTMODIFICA - NEW ASSY

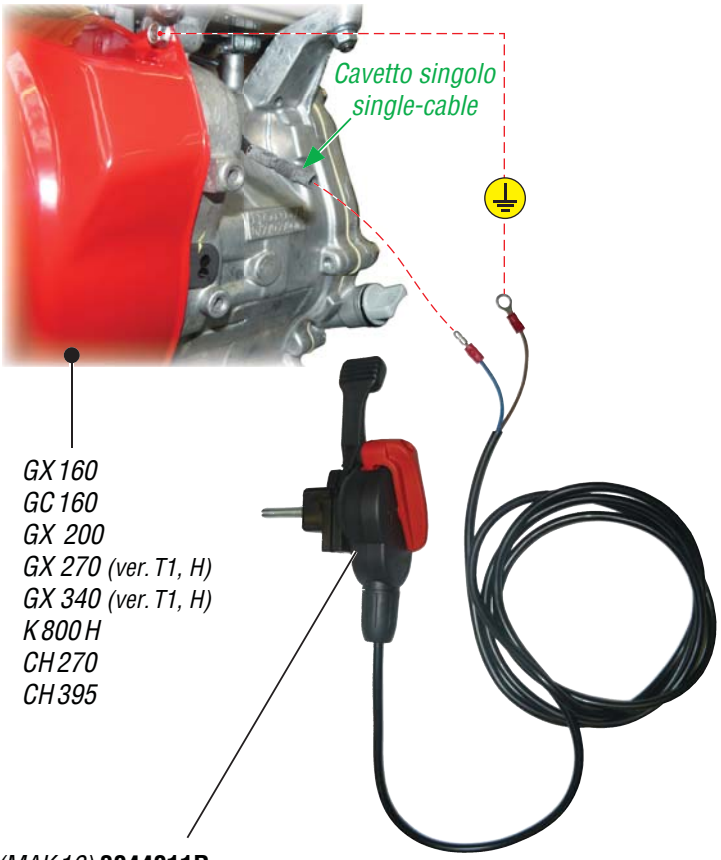

(MAK16) **3044011R**
(BRIK1 - BRIK3 - KAM4 - KAM5 - KAM5HF - KAM5JUNIOR) **3044010R**

our **power**, your **passion**

BOLLETTINO - BULLETIN

TECNICO • TECHNICAL		GRUPPO • GROUP	1
RICAMBI • SPARE PARTS		NR • NO	01
INFORMAZIONI • INFORMATION	●	DATA • DATE	10-10

GENERALE - RICAMBI - GARANZIA General - Spares - Warranty	-1-	●	ACCESSORI Accessories	-2-	PRODOTTI DI COMPLEMENTO Other products	-6-	MOTOZAPPE Rotary tillers	-9-
TRINCIASARMENTI Flail mowers	-10-		TRANSPORTER	-11-	MOTOCOLTIVATORI Rotary cultivators	-12-		

I

MODELLI: Motozappe - Motocoltivatori - Motofalciatrici - Transporters - Trinciasarmenti

OGGETTO: Numero di matricola

DESCRIZIONE: Il numero di matricola identifica il modello macchina, periodo di produzione e il numero progressivo delle macchine prodotte.

GB

MODELS: Rotary tillers - Rotary cultivators - Cutterbar mowers - Transporters - Flail mowers

SUBJECT: Serial number

DESCRIPTION: The serial number identifies the machine model, date of production and progressive number of produced machines.

ESEMPIO / EXAMPLE

B	1	3	0	3	4	2	5	4	2
1			2	3		4			

1 = MODELLO / MODEL
3 = SETTIMANA / WEEK

2 = ANNO / YEAR
4 = NUMERO PROGRESSIVO / PROGRESSIVE NUMBER

PREFISSO / PREFIX	MODELLO / MODEL
B01	FC20 / FC20L / FC30
B02	FC30M
B03	FC30H / FC30HM
B04	BRIK1 / BRIK3
B05	KAM4 / KAM5
B06	119
B07	106
B08	110 / 112
B09	115
B10	160 / 162
B11	NTR 270V / 350V
B12	NTR 450 / 550 / 550D / 1750D / 2250D

PREFISSO / PREFIX	MODELLO / MODEL
B13	NTS 65 / 80
B14	121 / 122
B31	MAK16 / MAK17 / MAK18
B33	193 / 194
B34	NTS 50
B35	101 / 102
B39	100
B41	090
850	010

Product Information

Language	INGLESE
Nr.	10
Date	02/2012
Subject	EN-709

our **power**, your **passion**

Compliance with standard UNI-EN-709

Rotary cultivators

The recent update of safety measures (contained in standard UNI-EN-709) called for a revision of the following product types for agricultural applications in relation to the operator safety devices:

rotary tillers
rotary cultivators

In the case of rotary cultivators, the main changes prompted by the update concern the following functional areas of the machine:

1. Control system
2. Soil working tool
3. Speed change
4. Braking system

Emak has met these requirements by implementing dedicated technical solutions and redesigning the layout of certain controls.

our power, your passion

TECHNICAL SOLUTIONS

• Control system: Irrespective of the type of transmission installed on the rotary cultivators, the machine must have a hold-to-run control, configured in such a way that:
- when the operator releases the levers, the engine does not shut off
- activation of the lever occurs in two distinct stages.

New features were required in order to keep the engine running even when the operator is absent and to avoid involuntary activation of the controls, notably:

A) a new clutch type, known as a reverse clutch. This is a normally disengaged clutch (drive not transmitted between engine and gearbox) that makes it possible to keep the engine running when the control levers are not operated, both with a gear engaged and in neutral.
Moreover, when the levers are released the rotary cultivator remains braked thanks to a safety brake device installed on the clutch (Fig.1). This supplementary brake is applied whenever the clutch is disengaged, thereby avoiding uncontrolled movement of the machine and protecting the operator's safety.

B) a new system for activation of the reverse clutch, called QUICK-START and composed of:

1) Dual control lever comprising:
- an upper holding lever operated by means of two separate movements (Fig.2 A) and with force of less than 27.5 N (approximately 3 kg);
- a lower drive lever, operated with just one hand (Fig.2 B) and equipped with manual locking and automatic release (Fig.2 C) thus maximising operator comfort.

2) Rocker: this device is tripped when both levers have been activated by the operator, consequently controlling engagement of the clutch. (Fig.3)

3) Spring shock absorber: composed of a steel cylinder and a preloaded spring; manages simultaneous operation of the control levers and transmits the necessary force for operation of the clutch. (Fig.4)
In synthesis, the use of the QUICK START system means that simultaneous activation of the two levers enables the load to be transferred from the rocker to the shock absorber, thereby causing the clutch to engage and transmit drive between engine and gearbox.
It follows that the current Motor Stop system will no longer be installed on the rotary cultivators.

Fig. 1

Fig. 2

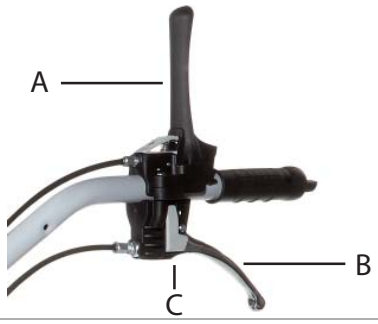

Fig. 3

Fig. 4

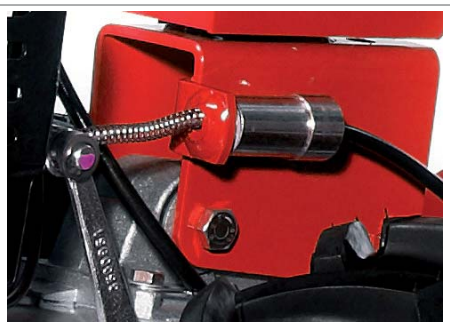

TECHNICAL SOLUTIONS

Fig. 5

Fig. 6

Fig. 7

• Soil working tool:
The standard specifies that, under any given operating condition, the minimum distance between the operator and the tool shall be between 600 mm and 700 mm. Accordingly, spacer knobs have been added to the ends of the handgrips; this modification also improves ergonomic efficiency during operations.

• Speed change:
The ground speed of certain rotary cultivators in the range has been revised in order to comply with the new limits imposed by the standard (8 km/h forward and 3 km/h reverse).

• Braking system:
All rotary cultivators, with the exception of models BRIK 1 and BRIK 3, will be equipped as standard with service brakes that can be operated directly from a lever on the handlebar (a double lever for models with differential), allowing immediate immobilisation of the machine when necessary (such as stopping on a gradient or negotiation of obstacles).

Rotary cultivators				
Model	QUICK-START	Speed change cmply	Soil working tool	Braking system
BRIK 1	●	-	●	-
BRIK 3	●	-	●	-
KAM 4	●	●	●	●
KAM 5	●	●	●	●
MAK 16	●	●	●	●

It's an Emak S.p.A. trademark Member of the Yama Group
Via E.Fermi, 4 • 42011 Bagnolo in Piano (Reggio Emilia) - Italy
Tel. +39 0522 956611 • Fax +39 0522 951555
info@mynibbi.com• www.mynibbi.com