10 January 2023
Version 1.4

Hilltip

Ice STRIKER™

PARTS LIST

900-1250 LITER POLY ELECTRIC MODULAR SPREADER

This manual replaces all editions with an earlier date.

TABLE OF CONTENTS

Spreader assembly 3-5
Chute assembly 6
Spinner assembly 7
Auger bottom pre-assembly 8
Back cover assembly 9
LED rear, break & turn light kit 10
Invert vee assembly 10
Extension kit 11
Tarp assembly 12-13
Auger gearbox pre-assembly 14
Auger screw pre-assembly 15
Spray bar 16
Spray bar mounting kit 17
Pump assembly 17
Hose reel 18
Spreader hopper hoses and fittings 19-20
Electrical harnesses 21
Controller assembly 21
Connectors 22-26

SPREADER ASSEMBLY 900 AM, 1150 AM & 1250 AML

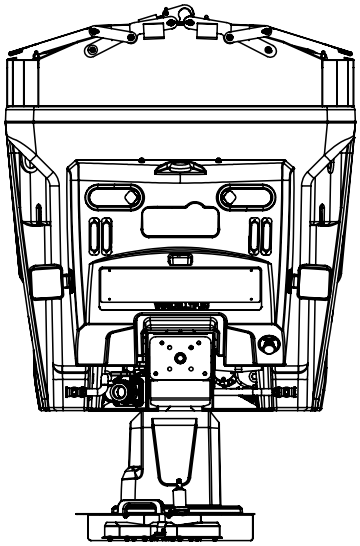

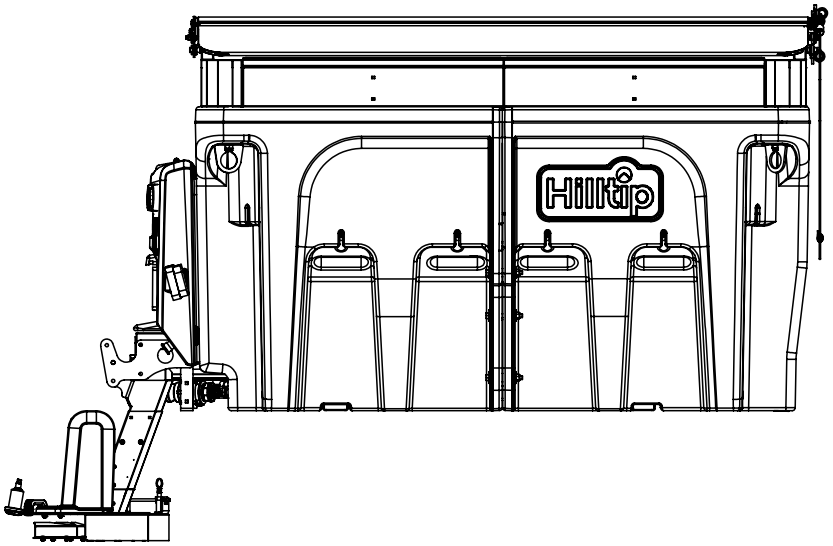

IceStriker™ 1150 AM

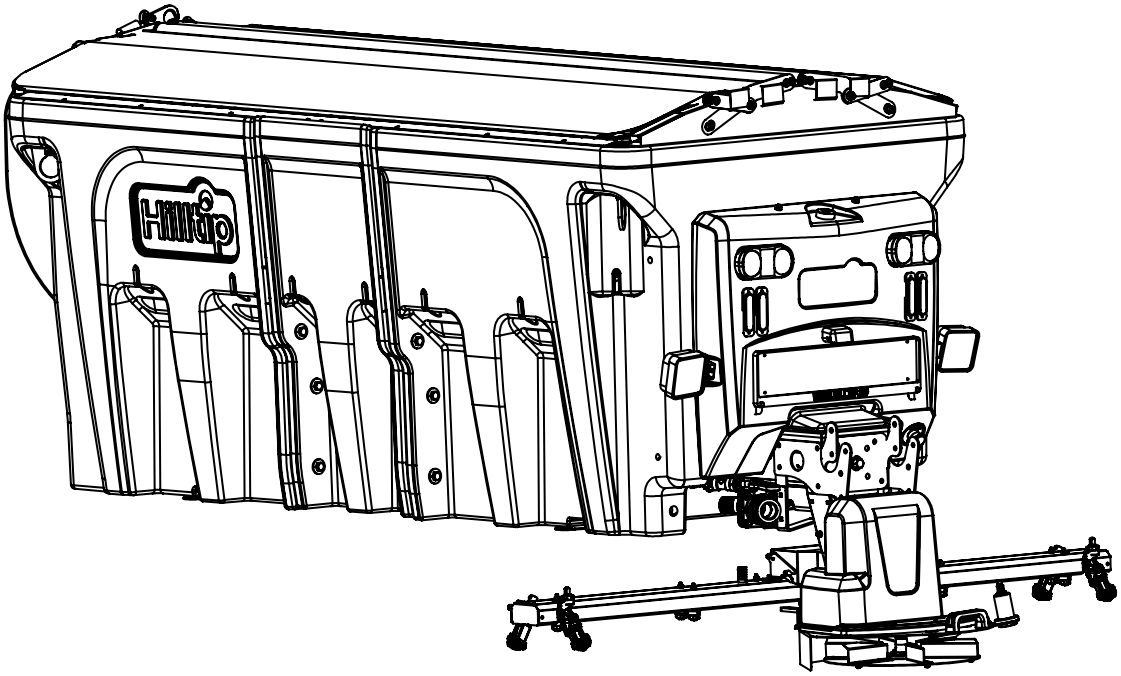

IceStriker™ 1250 AML

SPREADER ASSEMBLY 900 AM - 1250 AML

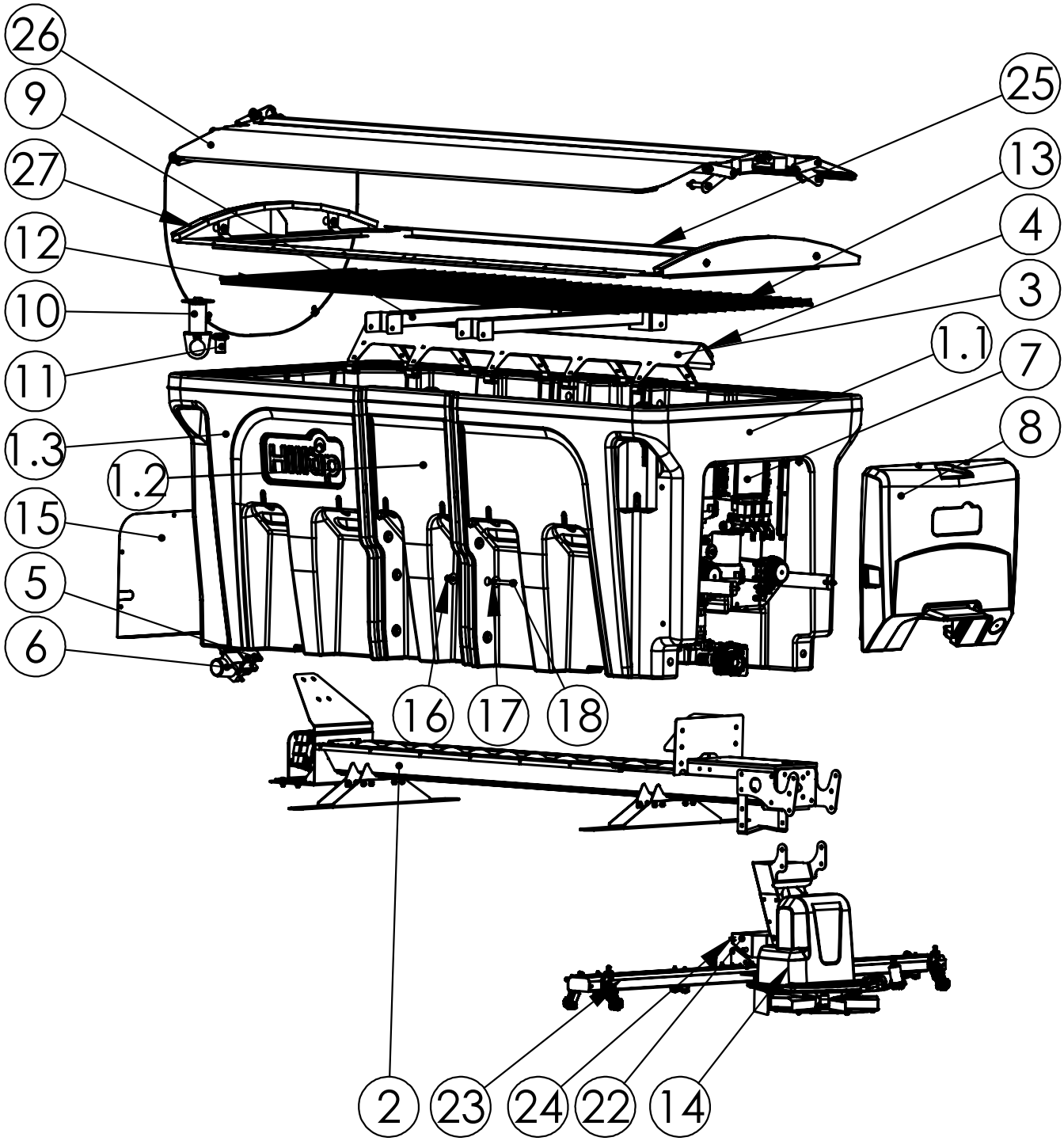

The image shows 1250 AML

SPREADER ASSEMBLY 900 AM - 1250 AML

Item	Qty	Part no.	Description	Notes
1.1	1	H28550	M1, Back section, Gray, 900 AM-1250 AML	
1.2	2	H28551	M1, Middle section, Gray, 1250 AML	
1.3	1	H28552	M1, Front section, Gray, 900 AM-1250 AML	
2	1	H28838	Auger bottom assembly 900 & 1150 AM	See page 7
	1	H29465	Auger bottom assembly 1250 AML	
3	1	H28745	Invert Vee kit 900 &1150 AM	See page 9
	1	H29469	Invert Vee kit 1250 AML	
4	1	H29470	Adjustable plate	
5	1	H28868	Small vibra assembly	
6	1	H22218	Vibrator assembly	
7	1	H30116-1	Spreader module 12V	
	1	H30471	Spreader module 24V	
8	1	H29376	Back cover assembly	See page 8
9	2	H29260	Cross bar	
10	4	H28338	Spreader fastening bracket	
11	6	H28500	Breather valve 1" Breather valve 1"	
12	2	H29358	Top screen 900 & 1150 AM (905.0 × 1005.0 × 5 mm)	
	1	H29358	Top screen 1250 AML (905.0 × 1005.0 × 5 mm)	
13	1	H29473	Top screen 1250 AML (1356,5 × 1005.0 × 5 mm)	
14	1	H28773	Chute assembly short	See page 6
15	1	H29378	Cover plate	
16	12	HF10504	Nyloc DIN 985 M12 A4	
17	24	HF10527	Washer DIN 9021 A4 M12	
18	12	HF19142	Bolt DIN931 A2 M12x110	
22	1	H29931	Spraybar mounting kit	See page 15
23	1	H24582	Spraybar - Brine spreader	See page 14
24	1	H40225	Locking pin	
25	2	H40957	List plate	
26	1	H29852	Tarp assembly 900 & 1150 AM	See page 11
	1	H40950	Tarp assembly 1250 AML	See page 12
27	2	H29963	Short side Bracket 1250 AML	

CHUTE ASSEMBLY SHORT - H28773

Item	Qty	Part no.	Description	Note
1	1	H28774	Chute top part	
2	1	H28777	Chute lower part	
3	1	H24419	Motor gearbox assembly	
4	1	H28783	Spinner cover	
5	1	H28523	Gearbox plastic spacer	
6	1	H23081	Spinner assembly	See page 7
7	2	H25140	Washer	
8	1	H26949	Handle	
9	1	H28560	M1 Spinner cover, Black	
10	1	H22644	Index plunger	
11	1	H27706	EOM Sensor kit	Optional
12	1	H28785	Plate	
13	2	HF10935	Lockbolt DIN 603 A4 M8x20	
14	2	HF10513	NYLOC NUT DIN 985 M8 A4-80	
15	2	HF10512	LOCK NUT M6 A4 DIN985	
16	6	HF10929	Lockbolt DIN603 M6x16 A4	
17	2	HF10501	Washer M6 A4 DIN 127	
18	4	HF19123	ISO 7380 A4 M6x16	
20	4	HF19385	Locknut DIN 6926 A4 M6	
21	1	H29431	Lock bracket	
22	1	H29434	Adjuster arm	
23	1	H29861	Linear actuator 80mm 24VDC	Optional
	1	H29860	Linear actuator 80mm 12VDC	Optional

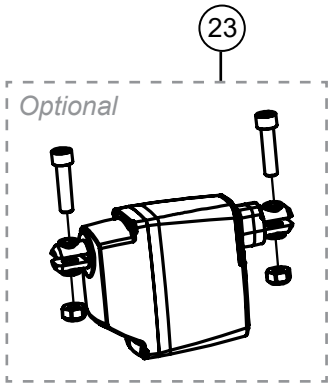

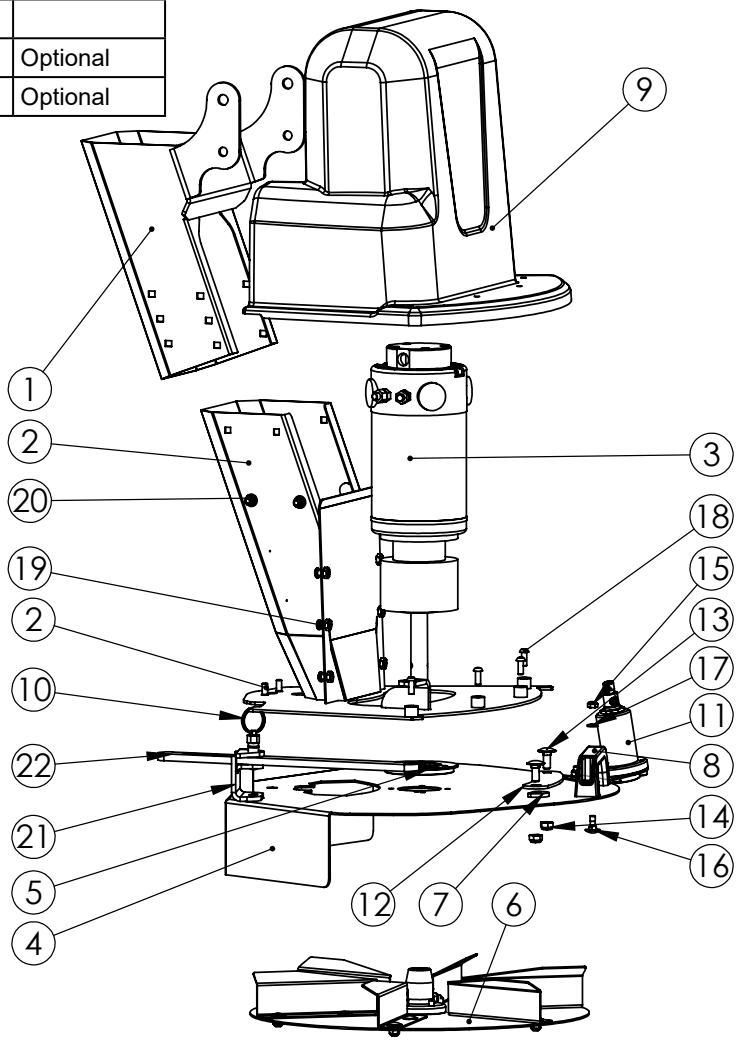

SPINNER ASSEMBLY - H23081

Item	*Qty*	*Part no.*	*Description*
1	1	H23082	Spinner plate 390 x 390 × 2
2	6	H23083	Wing plate
3	1	H21756	Bush
4	12	HF19113	Lock bolt M6x12 A4
5	12	HF10501	Washer M6 A4 DIN 127
6	12	HF10512	Lock nut M6 A4 DIN985
7	5	HF10436	In Hex Bolt M6x10 DIN 4762
8	1	HF19114	Socket set screw M6x25 A2

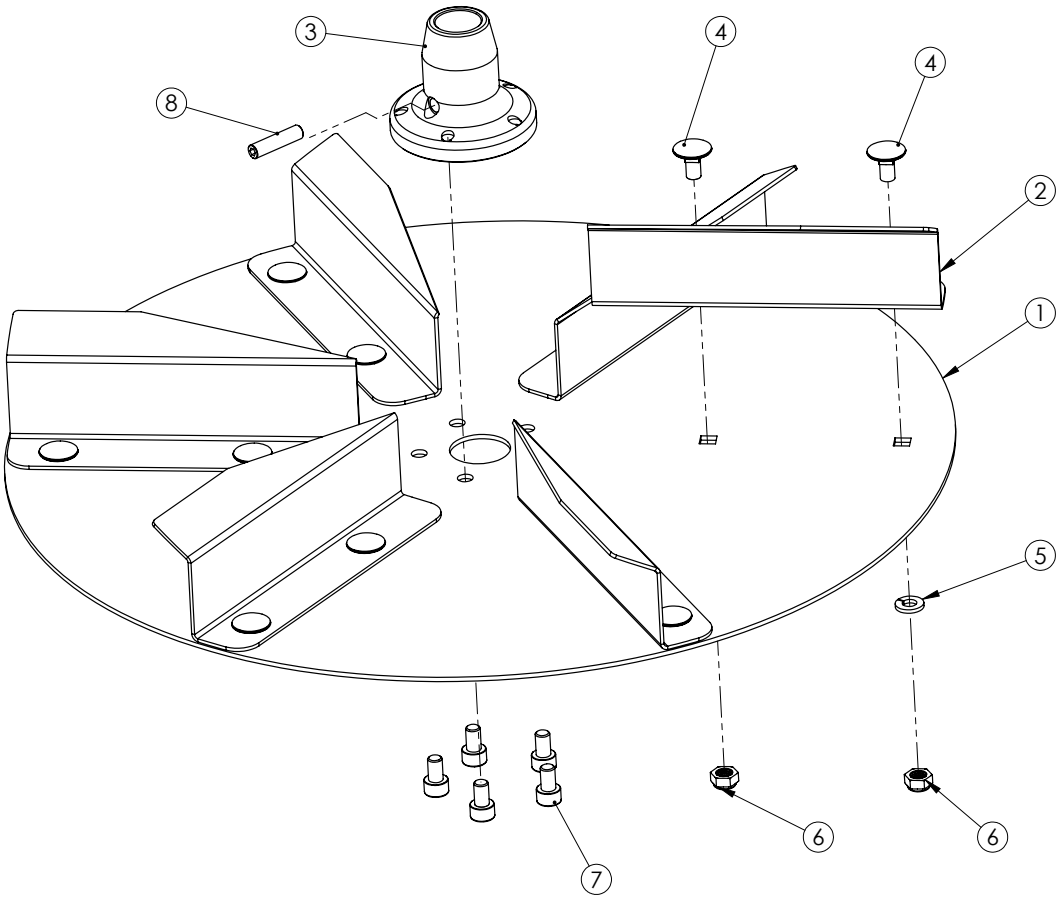

AUGER BOTTOM PRE-ASSEMBLY

900 & 1150 AM - H28838
1200 AML - H29465

Item	Qty	Part no.	Description
1	1	H28730	Auger bottom 900 & 1150 AM
	1	H29464	Auger bottom 1250 AML
2	1	H28762	Auger 900 &1150 AM
	1	H29467	Auger 1250 AML
3	2	H26316	Flange bearing UCF205
4	1	H28744	Bearing plate
5	2	H28743	Truck bed support leg
6	2	H28742	Plate
7	1	H28739	Front outer vibrator plate
8	1	H22218	Vibrator assembly
9	1	H28741	Plate
10	1	H28794	Vibrator cover assembly
11	1	H29428	Bracket
12	1	H29429	Plate
13	1	H29425	Cover plate
14	1	H29426	Nozzle bracket
15	1	H25839	Nozzle
16	20	HF12827	Bolt M8x16 8.8 DIN933 ZN
17	20	HF10513	NYLOC NUT DIN 985 M8 A4-80
18	20	HF15149	Washer DIN 125 M8 ZN
19	4	HF19387	DIN 603 A4 M10x25
20	4	HF15064	LOCK NUT DIN 985 M10
21	1	H29437	Auger gearbox pre-assembly
22	1	H28772	Axle coupling half
23	1	H28771	Axle coupling flex element

The image shows 900-1150 AM
auger bottom pre-assembly H28838

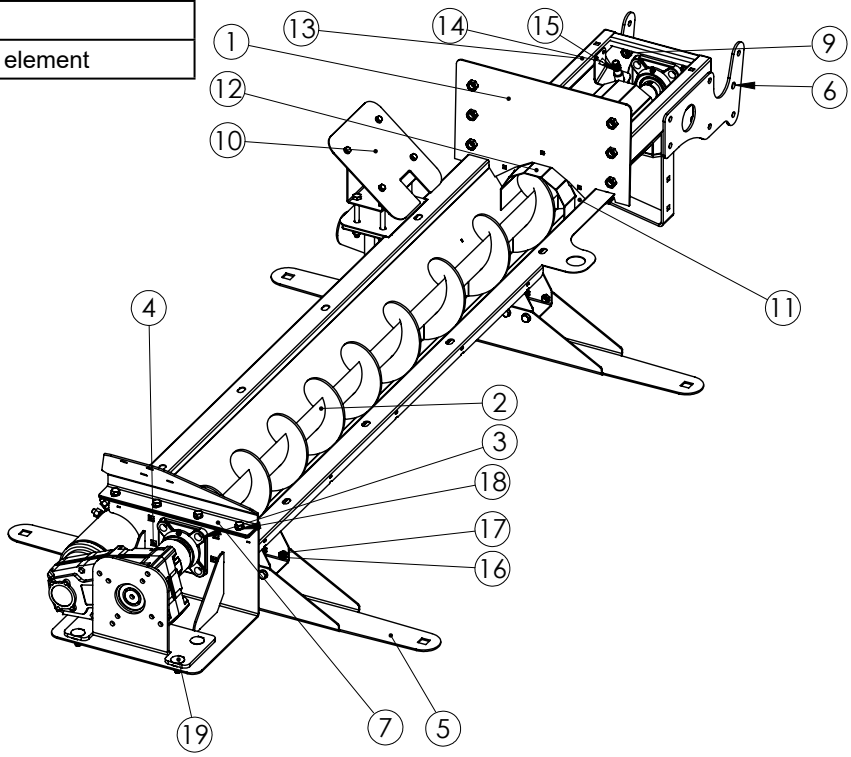

BACK COVER ASSEMBLY - H29376

Item	Qty	Part no.	Description	Notes
1	1	H28820	Rubber door seal J profile	
2	1	H28559	M1 Back cover, Black	
3	2	H27378	LED Strobe warning light yellow	Optional
4	2	H22223	LED Work light	Optional
6	1	H22093	Emergency stop 40mm	
7	1	H29266	Plate	
8	1	H29267	Cover bracket left 900_M	
10	2	H28424	Plate	
11	2	H28425	Plate	
13	1	H29274	Hinge plate right 900_M	
14	1	H29275	Hinge plate left 900_M	
15	2	HF10673	Hex Bolt M10x25	
16	4	HF10479	Washer	
17	2	HF10503	Lock nut M10 Lock nut M10	
18	4	HF10930	DIN 603 A4 M6x20	
19	4	HF19385	Locknut DIN 6926 A4 M6	
20	2	HF10935	Lockbolt DIN 603 A4 M8x20	
21	2	HF10513	Nyloc nut DIN 985 M8 A4-80	
22	2	HF10492	DIN 125 A4 M8/8,4	
23	1	H40329	Washer strip	
24	1	H40330	Cable holder	
25	1	H29649	Rear, break and turn light kit - EU	Optional, see page 9

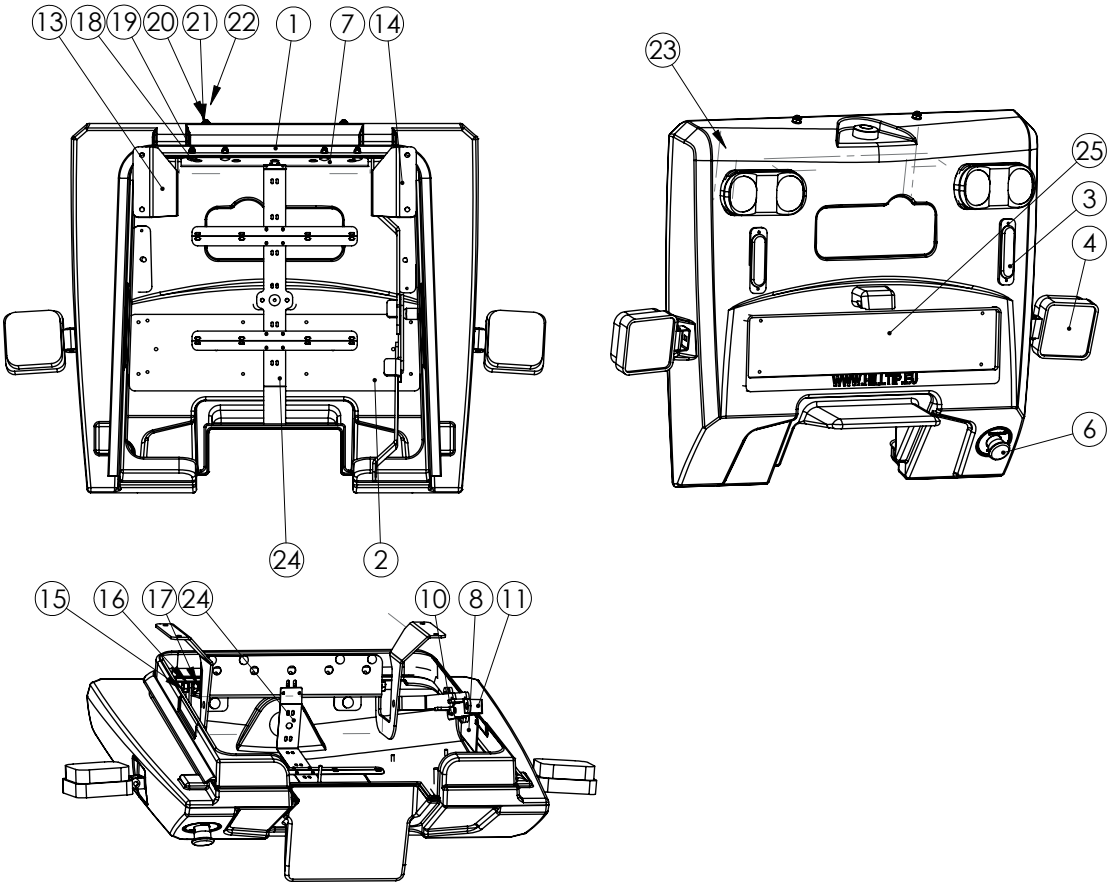

REAR, BREAK & TURN LIGHT KIT (OPTIONAL) - H29649

Item	Qty	Part no.	Description
1	1	H22247	License plate holder plastic
2	1	H27377	LED Licence plate light
3	1	H22402	LED rear light assembly, Passenger
4	1	H22401	LED rear light assembly, Driver side

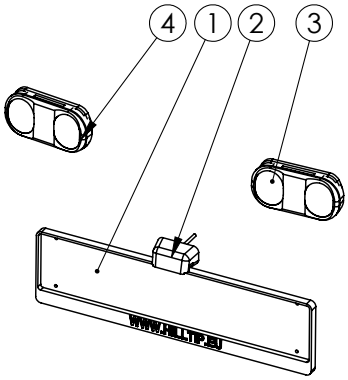

INVERT VEE KIT

900 AM, 1150 AM - H28745

Item	Qty	Part no.	Description
1	8	H28747	Bracket
2	1	H28746	Top vee plate, 900-1150 AM

1250 AML - H29469

Item	Qty	Part no.	Description
1	10	H28747	Bracket
2	1	H29468	Top vee plate, 1250 AML

The image shows 1250 AML invert vee kit H29469

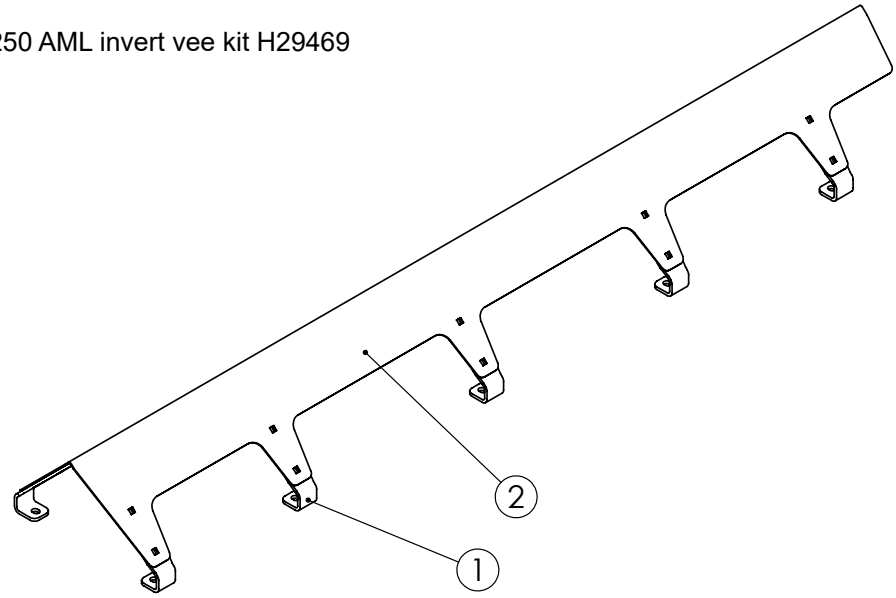

SPREADER EXTENSION, 1150 AM - H29814

Item	*Qty*	*Part no.*	*Description*
1	4	H29822	Side fastener short
2	2	H29815	Short side for technical tarp
3	4	H29820	Short extension
4	4	H28500	Breather valve 1”
5	4	H29197	AM Spreader Extension corner axle125mm
6	2	H29363	Center extension plate

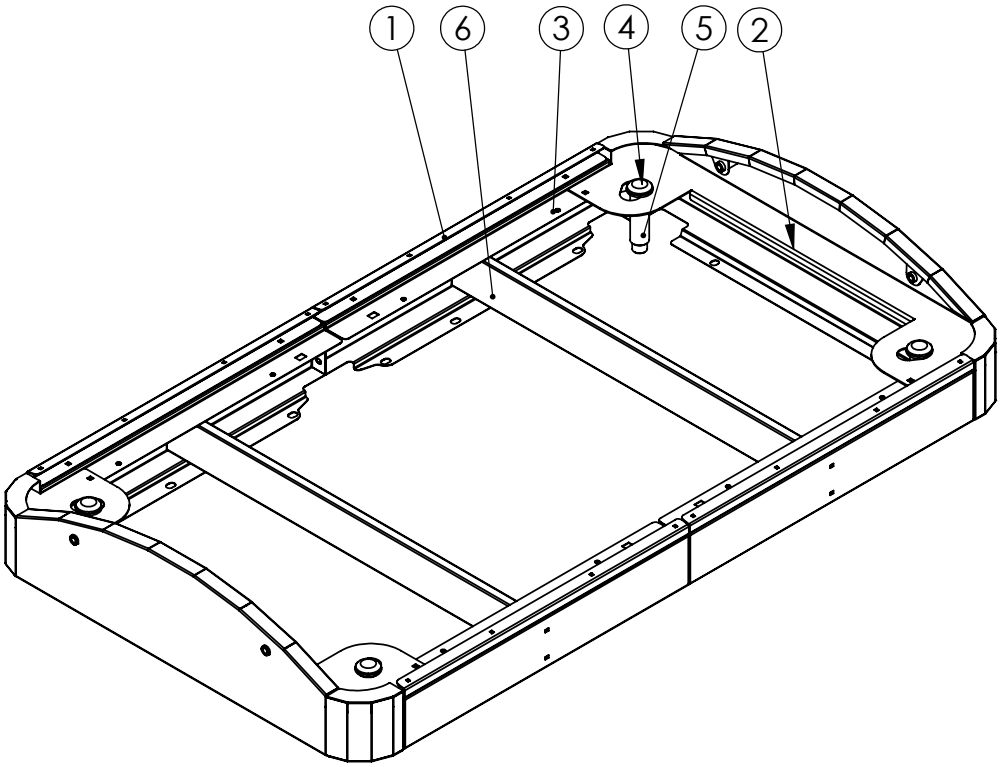

TARP ASSEMBLY 900 & 1150 AM - H29852

Item	Qty	Part no.	Description
1	2	H29847	Plate
2	4	H29848	Plate
3	2	H29849	Plate
4	4	H29844	Tarp pipe short
5	2	H29845	Tarp half for 900AM
6	2	H29846	Fastening plate
7	2	H27271	Bush
8	1	H29851	Wire assembly
9	16	HF11010	Hexagon socket head bolt
10	4	HF19411	ISO 7380 A4 M10x30
11	16	HF10493	Lock washer
12	12	HF10479	Washer
13	20	HF10526	Washer DIN 9021 A4 M10
14	8	HF10503	Lock nut M10
15	4	HF10377	DIN 912 A4 M10x100
16	4	H27782	Bush
17	4	H29853	Tarp pipe Distance

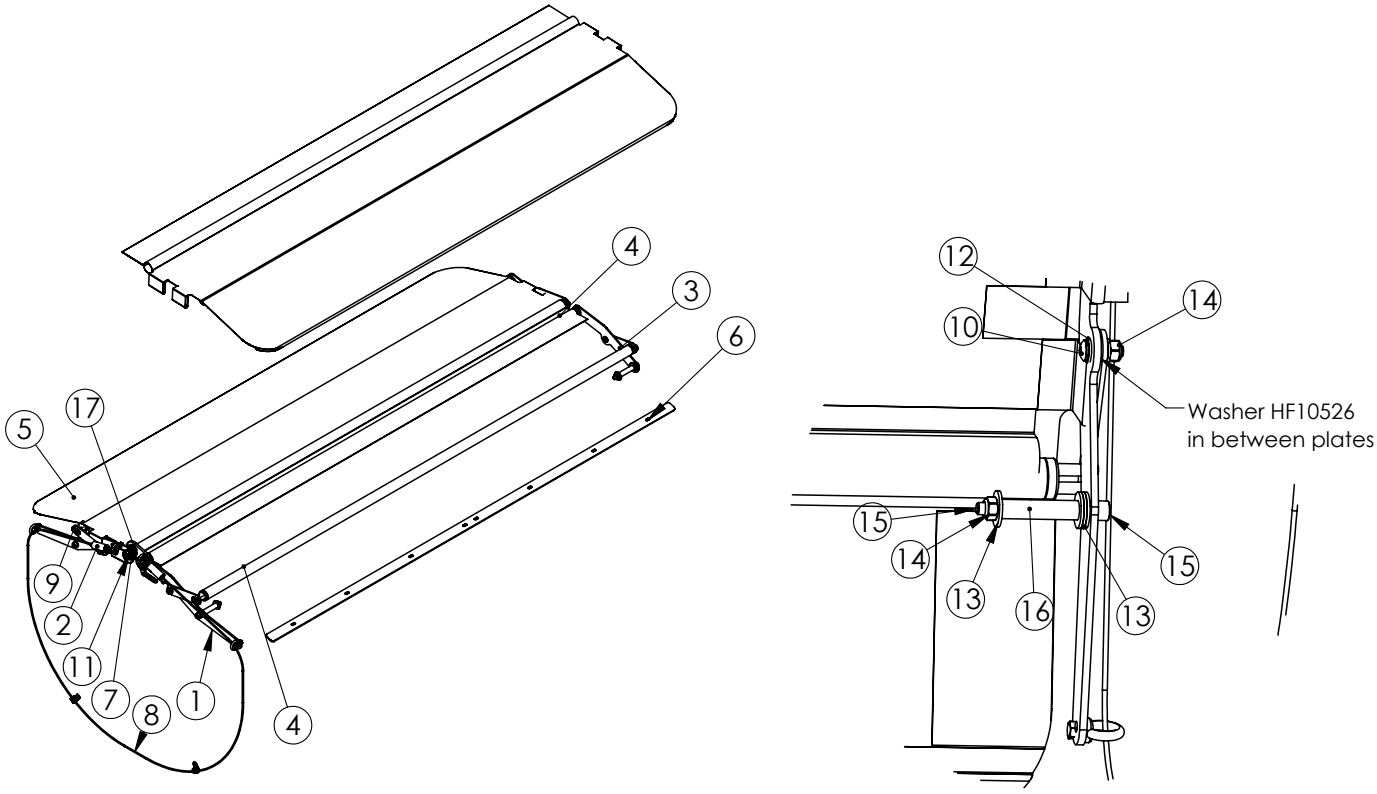

TARP ASSEMBLY 1250 AML - H40950

Item	Qty	Part no.	Description
1	2	H29847	Plate
2	2	H40953	Inner pipe bracket
3	4	H29848	Plate
4	2	H29849	Plate
5	2	H40951	Outer pipe bracket
6	2	H40956	Tarp half for 1250 AML
7	4	H40955	Fastening plate 1250 AML
8	2	H27271	Bush
9	1	H29851	Wire assembly
10	8	HF11010	Hexagon socket head bolt
11	4	HF19411	ISO 7380 A4 M10x30
12	8	HF10493	Lock washer
13	12	HF10479	Washer
14	20	HF10526	Washer DIN 9021 A4 M10 0
15	8	HF10503	Lock nut M10
16	4	HF10377	DIN 912 A4 M10x100
17	4	H27782	Bush

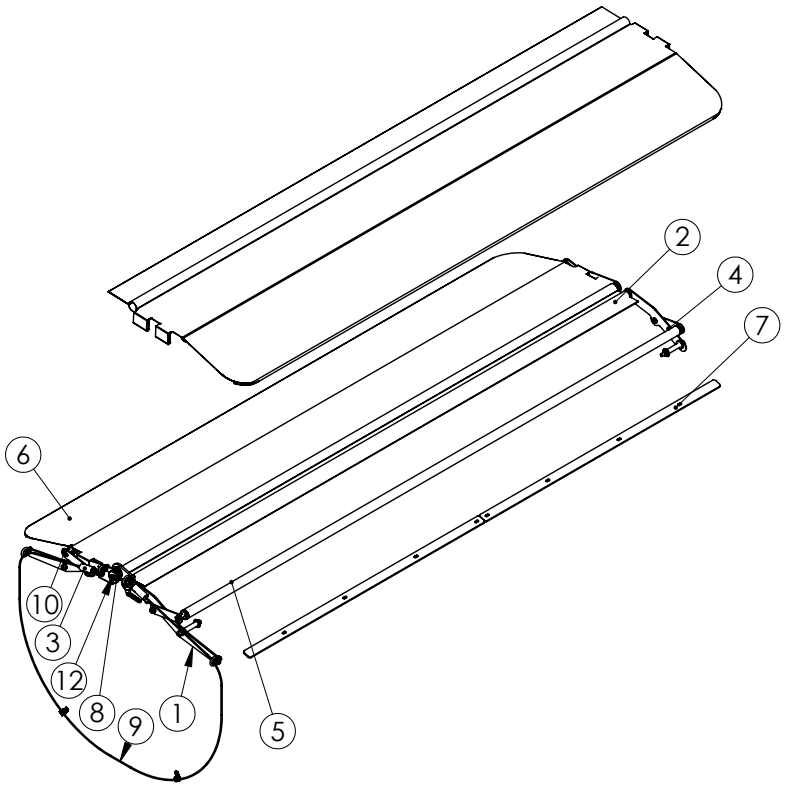

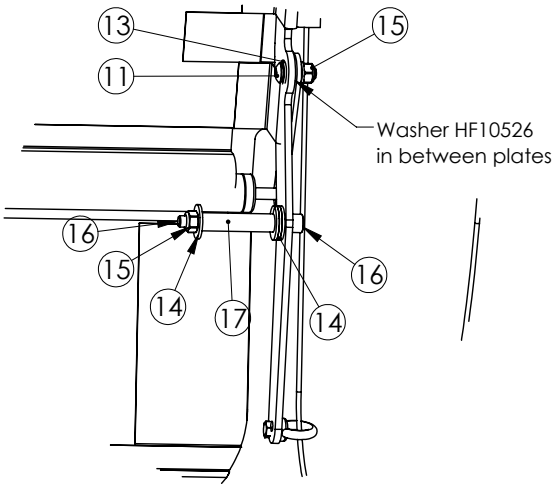

AUGER GEARBOX PRE-ASSEMBLY - H29437

Item	*Qty*	*Part no.*	*Description*
1	1	H28769	Gearbox axle
2	1	H28740	Gearbox bracket
3	1	H29112	Gearbox 146
4	1	H24794	Motor Assembly
5	1	H28772	Axle coupling half

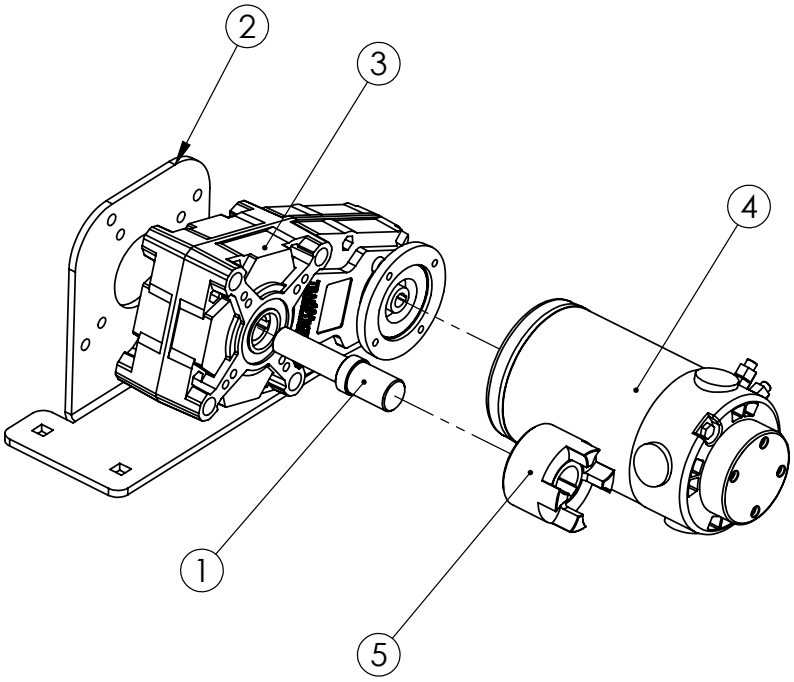

AUGER SCREW PREASSEMBLY

900 AM & 1150 AM - H28762
1250 AML - H29467

Item	Qty	Part no.	Description
1	1	H28767	Auger axle end
2	1	H28763	Pipe, 900 AM & 1150 AM
	1	H29466	Pipe, 1250 AML
3	1	H28768	Axle
4	5	H28366	Auger flute 114/34-Z140, 900 AM & 1150 AM
	7		Auger flute 114/34-Z140, 1250 AML
5	6	H28365	Auger flute 114/34-Z170, 900 AM & 1150 AM
	7		Auger flute 114/34-Z170, 1250 AML

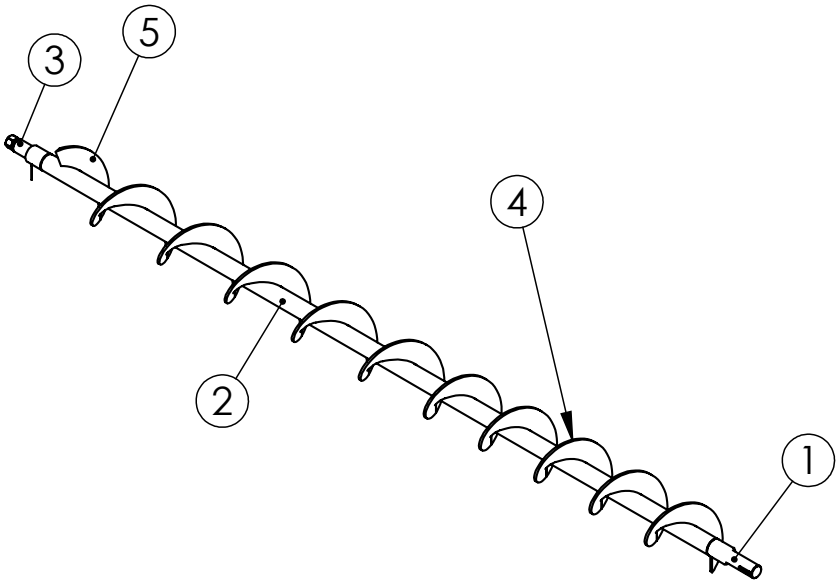

The image shows H28762 for IceStriker™900 AM & 1150 AM

FOR OPTIONAL LIQUID SYSTEM

SPRAYBAR - H24582

Item	Qty	Part no.	Description	Notes
1	2	H24613	Spray bar pipe	
2	1	H24583	Cover plate	
3	2	H24584	End plate	
4	7	H24585	Shim plate	
5	14	H22612	Nozzle filter	
6	10	H22608	Nozzle Flat spray	Standard
	10	H22606	Nozzle 3 spray	Optional
7	14	H22613	Nozzle cap	
8	4	H22609	Nozzle boom ext. type	
9	8	HF19360	Blind rivet 3,2x6 A4	
10	4	HF10733	Hex Bolt M6x25	
11	18	HF10491	Washer	
12	14	HF10512	LOCK NUT M6 A4 DIN985	
13	10	HF10732	Hex Bolt M6x20	
14	10	H24588	Nozzle holder	
15	4	H24589	Nozzle holder, adjustable	
16	4	H24638	Simple clamp	

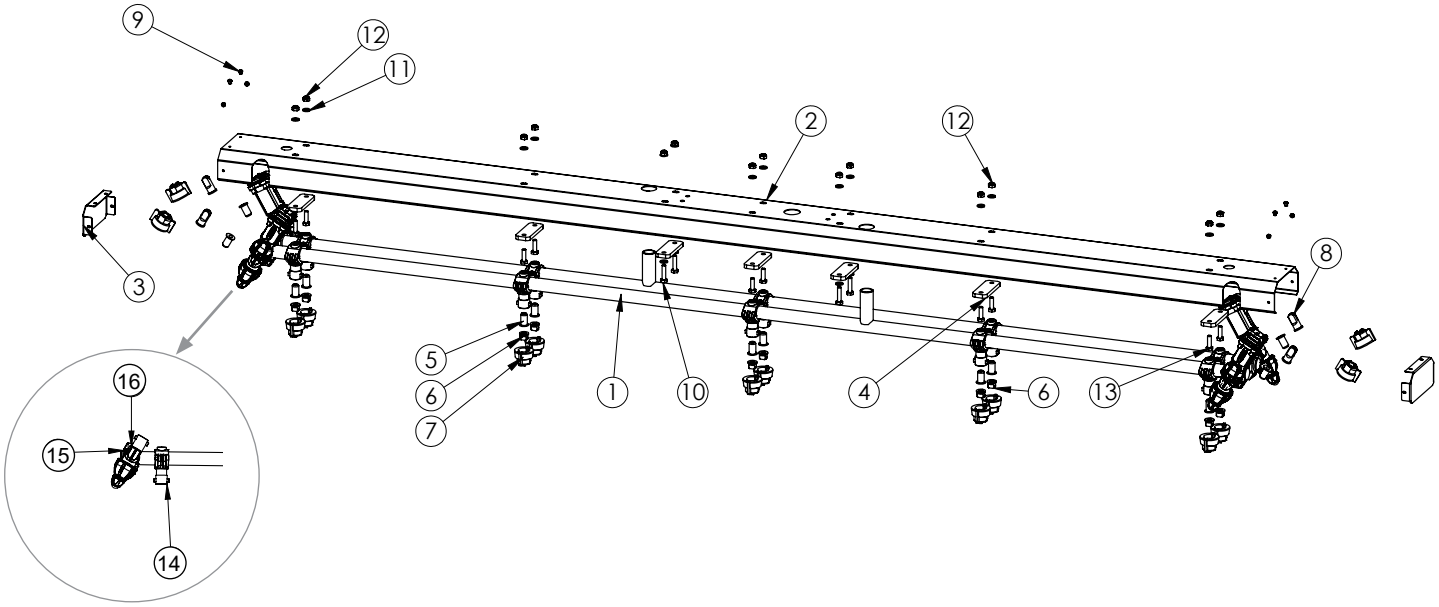

FOR OPTIONAL LIQUID SYSTEM

SPRAY BAR MOUNTING KIT - H29931

Item	*Qty*	*Part no.*	*Description*
1	1	H29932	Plate
2	2	H22595	Pin

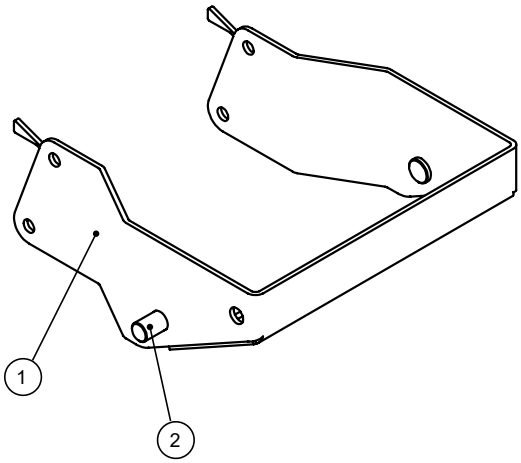

FOR OPTIONAL LIQUID SYSTEM

PUMP ASSEMBLY

12V - H25338
24V - H30321

Item	Qty	Part no.	Description
1	1	H41484	Pump head assembly
2	1	H41485	Valve assembly
3	1	H41486	Diaphragm assembly
4	1	H41487	Motor assembly 12V
	1	H41478	Motor assembly 24V
5	1	H41488	Motor 12V
	1	H41479	Motor 24V
6	1	H30416	Pressure sensor assembly
7	1	H25337	Pump bracket
8	4	H23003	Rubber bush

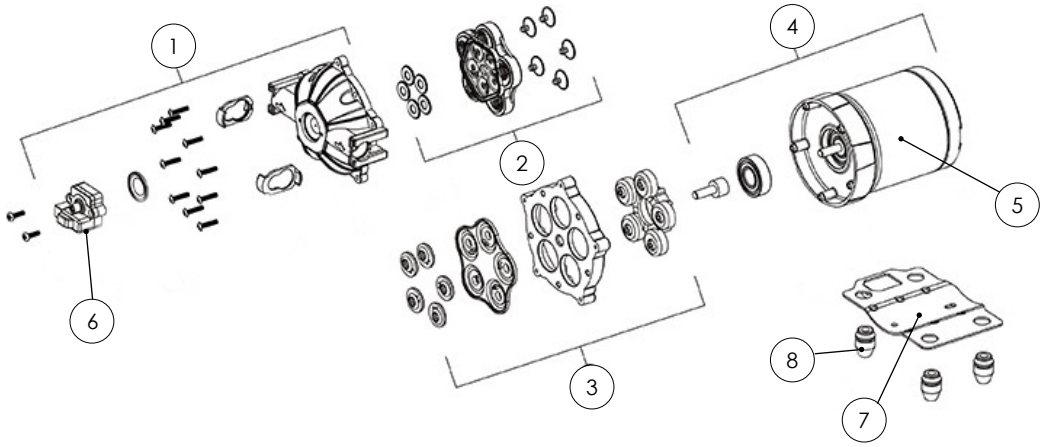

FOR OPTIONAL LIQUID SYSTEM

HOSE REEL

Item	Qty	Part no.	Description
1	1	H40690	Plastic bracket
2	1	H30452	Output case with pulleys
3	1	H30455	Cover for swivel
4	1	H30454	Connecting hose
5	1	H30453	Swivel with hose fitting
6	1	H22534	Spray pistol
7	1	H22540	Hose reel

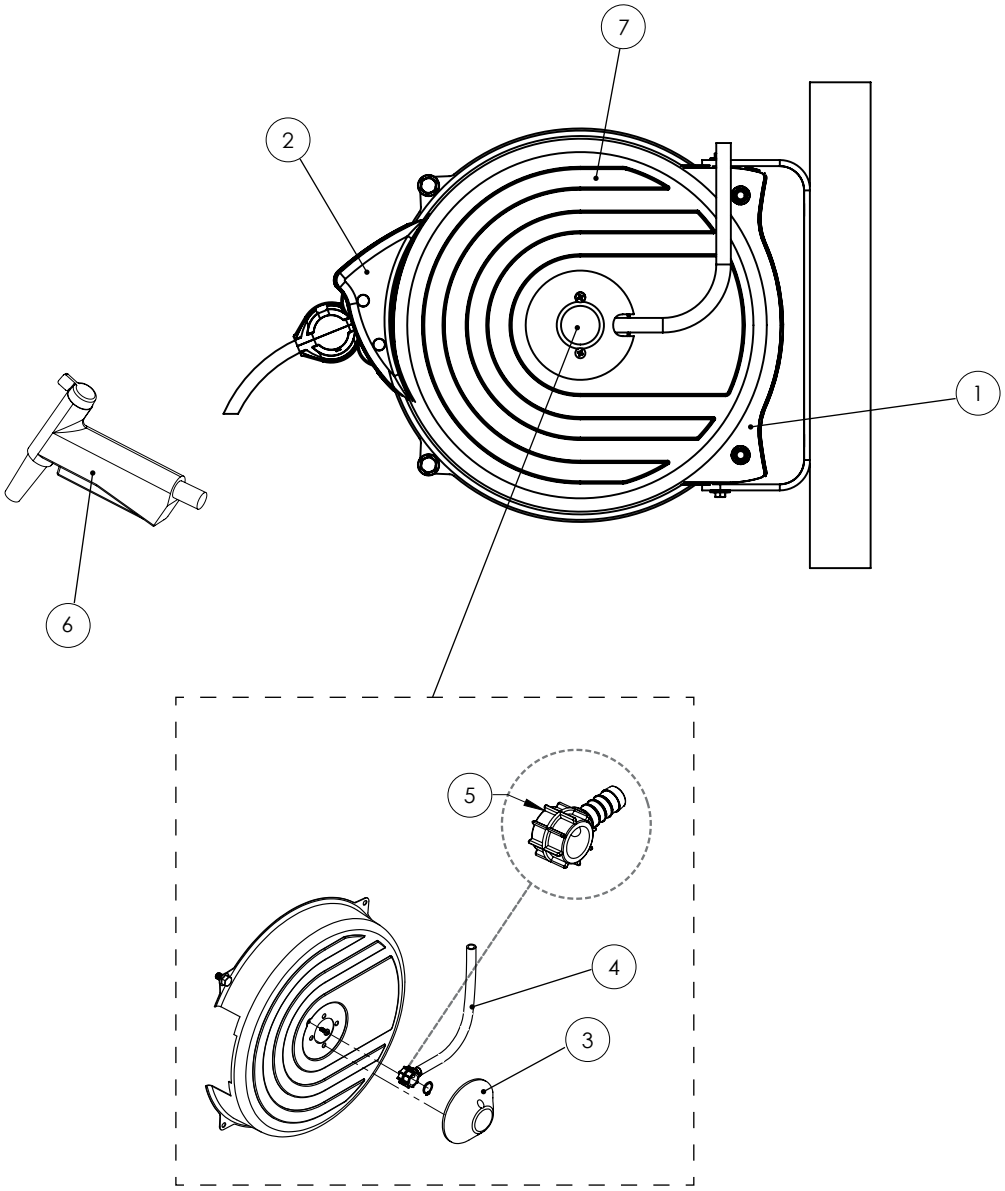

FOR OPTIONAL LIQUID SYSTEM

BOTTOM HOSES AND FITTINGS FOR 900-1150 AM

Item	*Qty*	*Part no.*	*Description*
1	3	H27956	T fitting Female 1 1/4”
2	3	H28359	Straight hose fitting 1 1/4”F → 40mm
3	1	H27957	90 deg fitting G1 1/4”→32mm
4	3	H28358	Straight hose fitting 1 1/4”F → 33mm
5	1	H41206	Hose 40mm - L 540mm
6	1	H41207	Hose 40mm - L 1110mm
7	1	H41208	Hose 32mm - L 315mm
8	1	H41209	Hose 32mm - L 1145mm

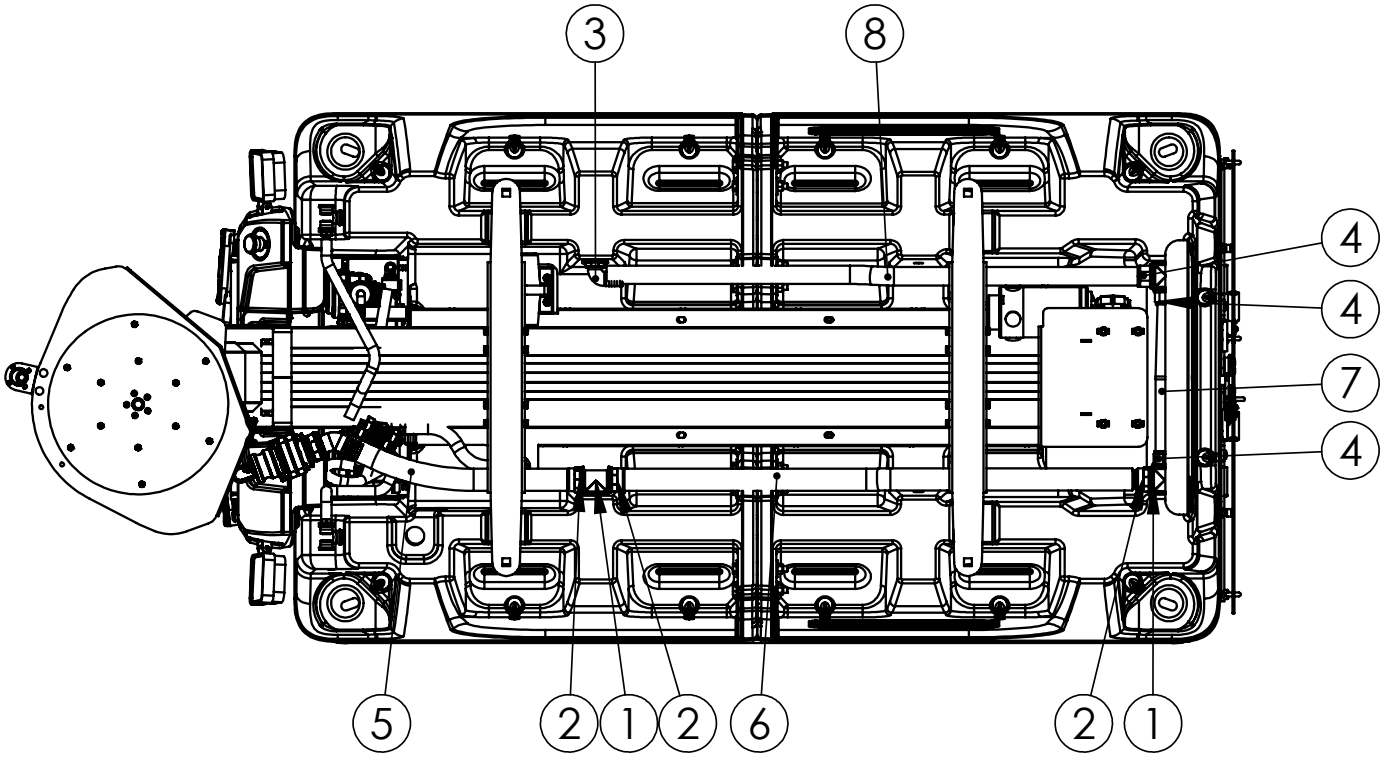

FOR OPTIONAL LIQUID SYSTEM

BOTTOM HOSES AND FITTINGS FOR 1250 AML

Item	*Qty*	*Part no.*	*Description*
1	5	H28358	Straight hose fitting 1 1/4”F → 33mm
2	5	H27956	T fitting Female 1 1/4”
3	5	H28359	Straight hose fitting 1 1/4”F → 40mm
4	1	H27957	90 deg fitting G1 1/4” → 32mm
5	1	H41206	Hose 40mm - L 540mm
6	1	H41208	Hose 32mm - L 315mm
7	1	H41555	Hose 32mm - L 980mm
8	1	H41556	Hose 32mm - L 490mm
9	1	H41557	Hose 40mm - L 1000mm
10	1	H41558	Hose 40mm - L 450mm

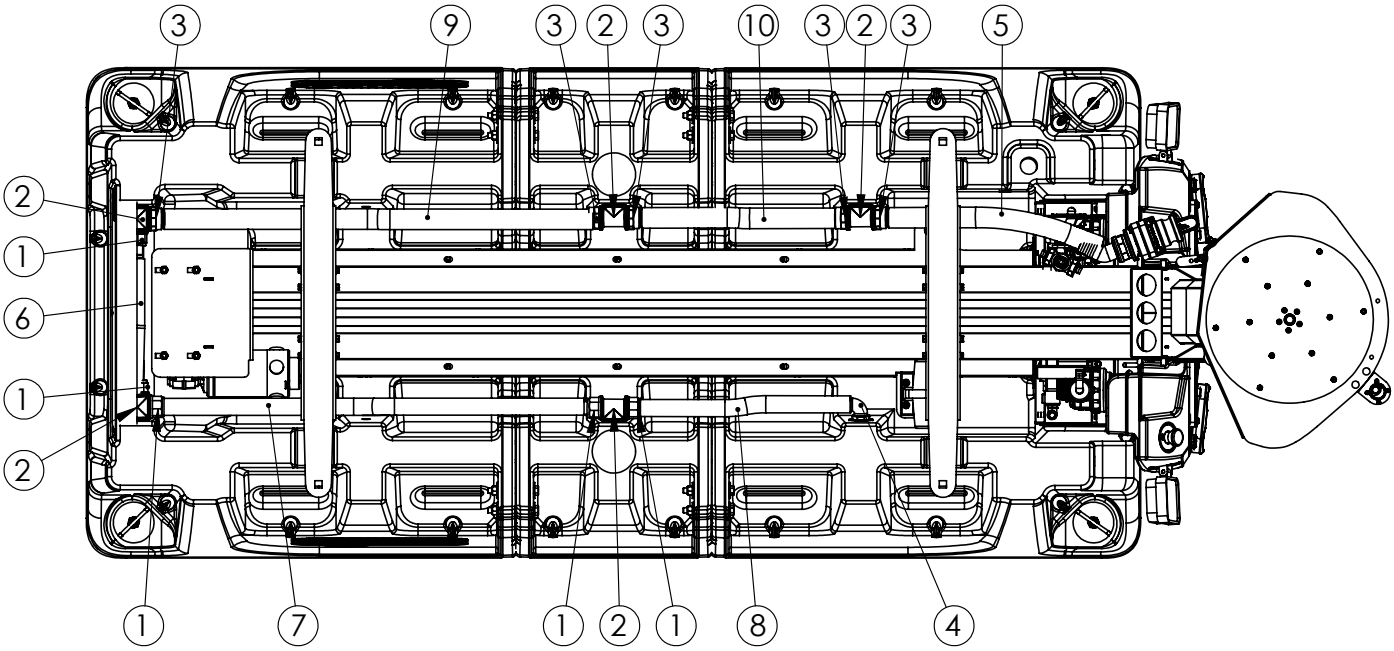

ELECTRICAL HARNESSES

Part no.	Description
H30130	Vehicle side harness
H30131	Extension harness 3m (optional)
H30132	Spreader side harness to vehicle side harness, 3000-4000AM (battery + data cable)
H30133	Spreader side harness, 3000-4000AM
H30134	Spinner motor to spreader module harness
H30135	Beacon harness split
H30136	License plate harness 3000-4000AM
H30137	Pre-wet harness
H30138	Spray bar 1 harness
H30139	Spray bar 2 harness
H30140	Hand spray harness
H30141	Auger-encoder/Vibrator to spreader module harness
H22756	Vehicle side 8-pin data cable
H22761	Spreader side 8-pin cable

CONTROLLER ASSEMBLY - H21913

Item	Part no.	Description
1	H22739	Controller front
2	H22975	Controller circuit assembly
3	H22960	RAM mount

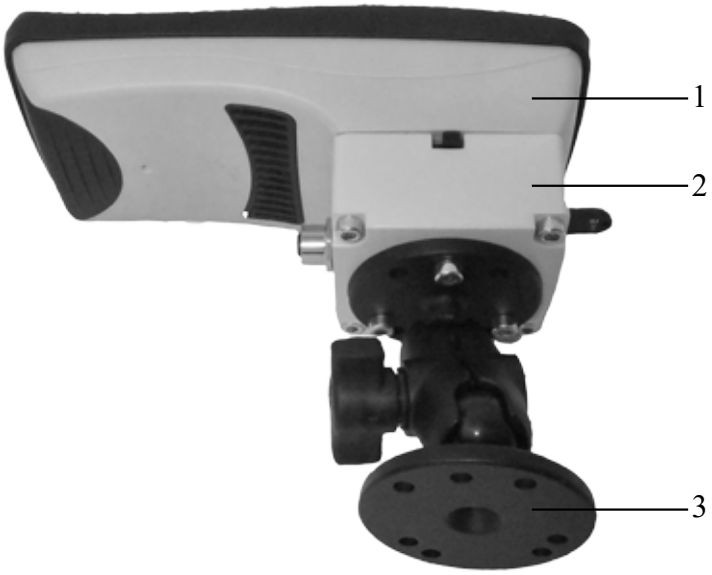

CONNECTORS

Item	Qty	Part no.	Description
1	1	H30151	Vehicle side harness connector
2	1	H30152	Terminal kit (8 pcs 0,5mm²)
3	1	H30145	Insert module
4	1	H25796	Insert module
5	1	H25763	Carrier frame
6	1	H25764	Cable gland
7	1	H25803	Cover
8	1	H25765	Housing

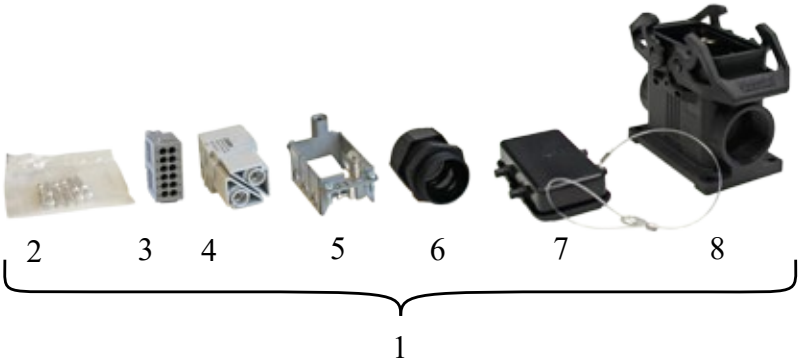

9	1	H26129	Fuse holder midval small
10	1	H22885	Fuse midval 125 A, pink
11	2	H24273	Connector 5mm 25 mm²

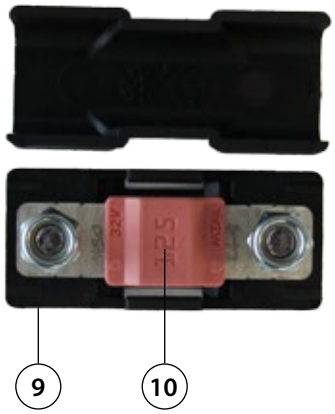

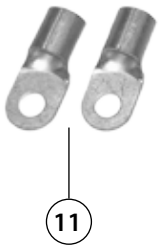

Item	Qty	Part no.	Description
1	1	H30150	Spreader side harness connector
2	1	H30153	Terminal kit (5 pcs 1,0 mm²)
3	1	H26625	Insert module
4	1	H25759	Carrier frame
5	1	H25800	Insert module
6	1	H25760	Cable gland
7	1	H25828	Housing

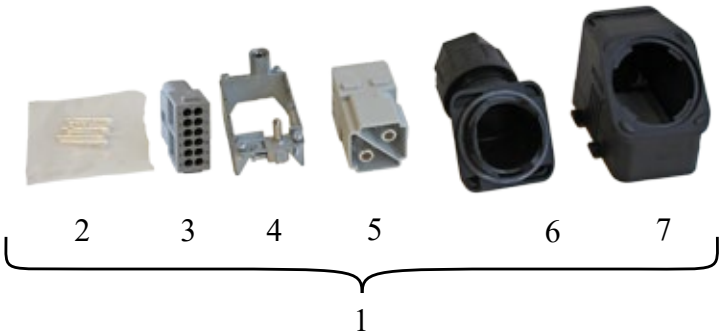

Item	Qty	Part no.	Description
1	1	H25766	Spreader side harness connector holder

Item	Qty	Part no.	Description
1	1	H22305	Protective cap ATP
2	1	H22304	Protective cap AT
3	1	H22168	Sealing Cap female

Item	Qty	Part no.	Description
1	1	H23366	DT connector kit 1mm²
2	1	H21879	Receptacle, 2-Way
3	1	H21877	Plug, 2-way
4	20*	H21883	Male Contact - Pin 0,823-1,31mm²
5	20*	H21881	Female Contact - Socket 0,823-1,31mm²
6	1	H21878	Wedge lock Plug, 2-Way
7	1	H21880	Wedge lock Recep., 2-Way

**minimum order quantity: 20 pcs*

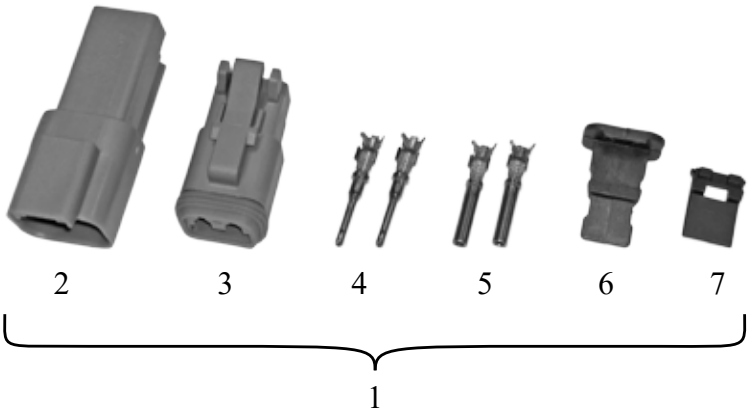

Item	Qty	Part no.	Description
1	1	H23368	DTP Connector kit
2	1	H21888	Plug, 2-way
3	1	H21886	Receptacle, 2-Way
4	1	H21889	Wedge lock Plug, 2-Way
5	1	H21887	Wedge lock Recep.,2-Way
6	20*	H21884	Female Contact - Socket 2,08-3,31 mm²
7	20*	H21885	Male Contact - Pin 2,08-3,31mm²

**minimum order quantity: 20 pcs*

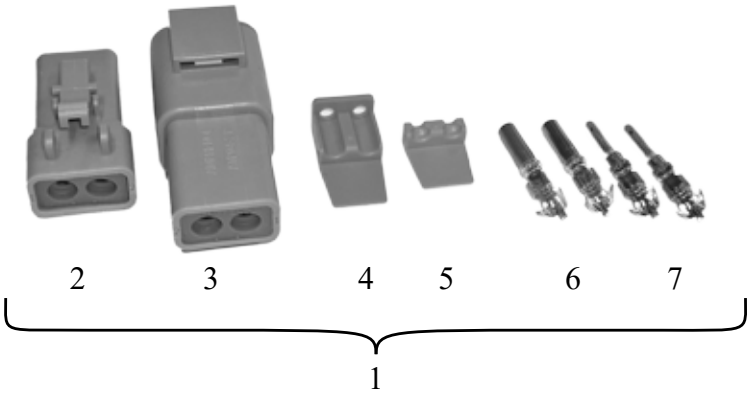

Item	Qty	Part no.	Description
1	1	H30154	Connector Kit, DT 6-way Male
2	1	H30125	Receptacle, 6-Way
3	1	H30128	Wedge lock recep., 6-Way
4	20*	H21883	Male Contact - Pin 0,823-1,31mm

**minimum order quantity: 20 pcs*

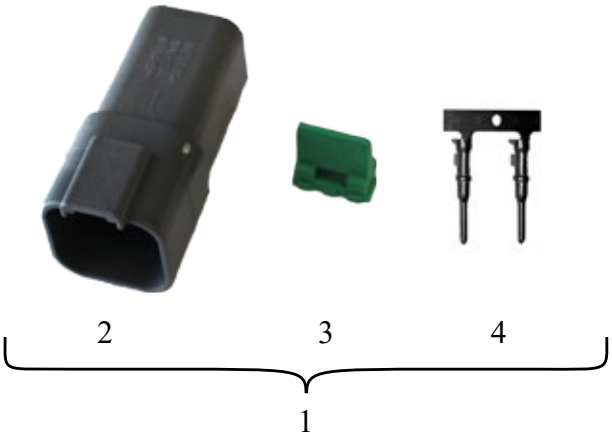

Item	Qty	Part no.	Description
1	1	H30155	Connector Kit, DT 6-way Female
2	1	H25941	Plug, 6-way
3	1	H25942	Wedge lock Plug, 6-Way
4	20*	H21881	Female Contact - Socket 0,823-1,31mm

**minimum order quantity: 20 pcs*

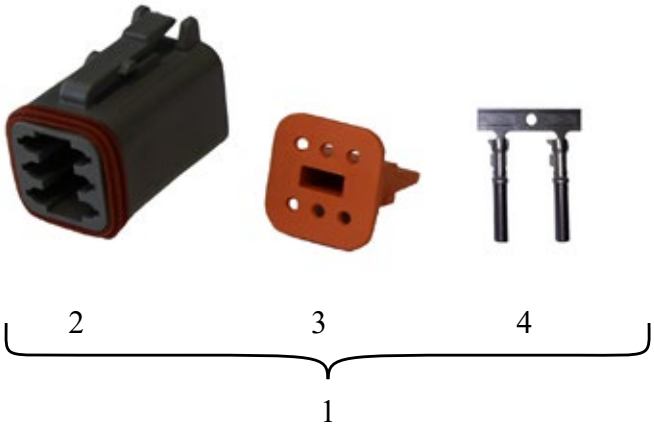

Item	Qty	Part no.	Description
1	1	H23369	IO module connector kit
2	1	H21955	Connector Housing AMPSEAL 35 pin
3	20	H21956	Female Contact - Socket

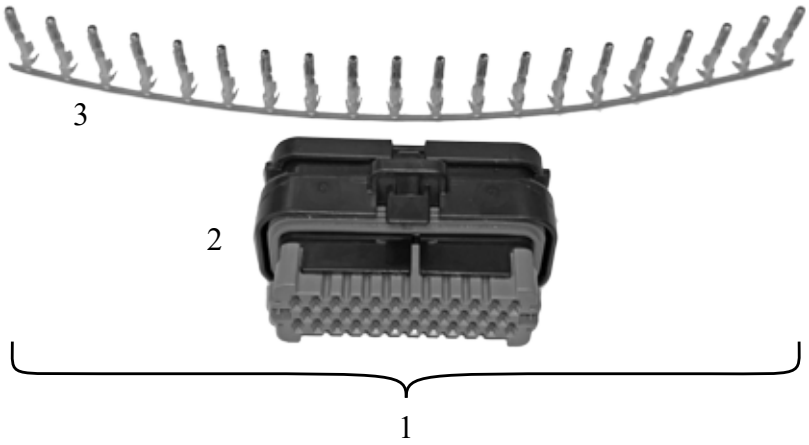

Item	Qty	Part no.	Description
1	1	H23370	Rear lights connector kit
2	1	H21910	Receptacle, 4-Way
3	1	H21908	Plug, 4-Way
4	1	H21911	Wedge lock Recep., 4-Way
5	1	H21909	Wedge lock Plug, 4-Way
6	20*	H21883	Male Contact - Pin 0,823-1,31mm²
7	20*	H21881	Female Contact - Socket 0,823-1,31mm²

**minimum order quantity: 20 pcs*

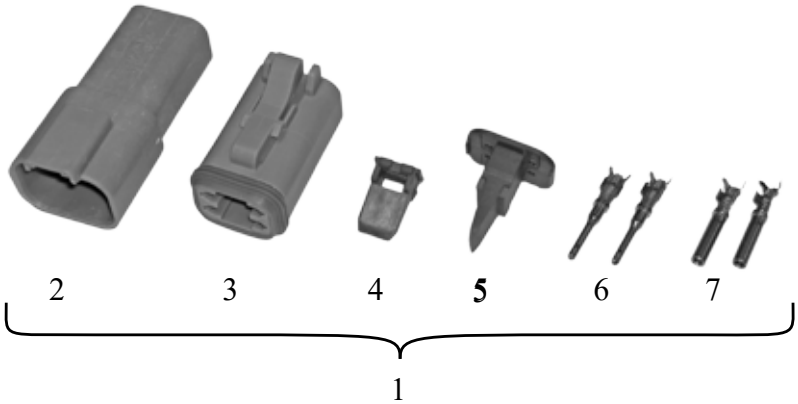

Item	Qty	Part no.	Description
1	1	H23529	Dielectric grease, 50g

Item	*Qty*	*Part no.*	*Description*
1	1	H21935	Connector for spinner, 8 mm 4 mm^2
2	1	H21953	Connector for auger/ conveyor, 8 mm 16 mm^2
3	1	H24274	Connector for vehicle side, 10 mm 25 mm^2
4	1	H24207	Connector for spreader module 8 mm 25 mm^2
5	1	H24273	Connector for fuse holder, 5 mm 25 mm^2

1

2

3

4

5

Oy HillTip Ab

Pukkisaarentie 6
FIN-68600 Pietarsaari
Finland

Phone: +358 50 5983 026
Phone: +358 50 3659 415

www.hilltip.com
info@hilltip.com