07.09.2021
Version 1.4

Hilltip

Ice STRIKER™

PARTS LIST

380 LITER STAINLESS STEEL SPREADER
(US 500 STAINLESS STEEL SPREADER)

SPREADER ASSEMBLY 2-3
ELECTRICAL COMPONENTS 4
CONTROLLER ASSEMBLY 4
CABLES 5
CHUTE ASSEMBLY 6
SPINNER ASSEMBLY 7
AUGER DRIVE ASSEMBLY 8
MOTOR GEARBOX ASSEMBLY 9
COVER ASSEMBLY 10
CONNECTORS 11-14
HEAVY DUTY CONNECTORS 15

This manual replaces all editions with an earlier date.

SPREADER ASSEMBLY

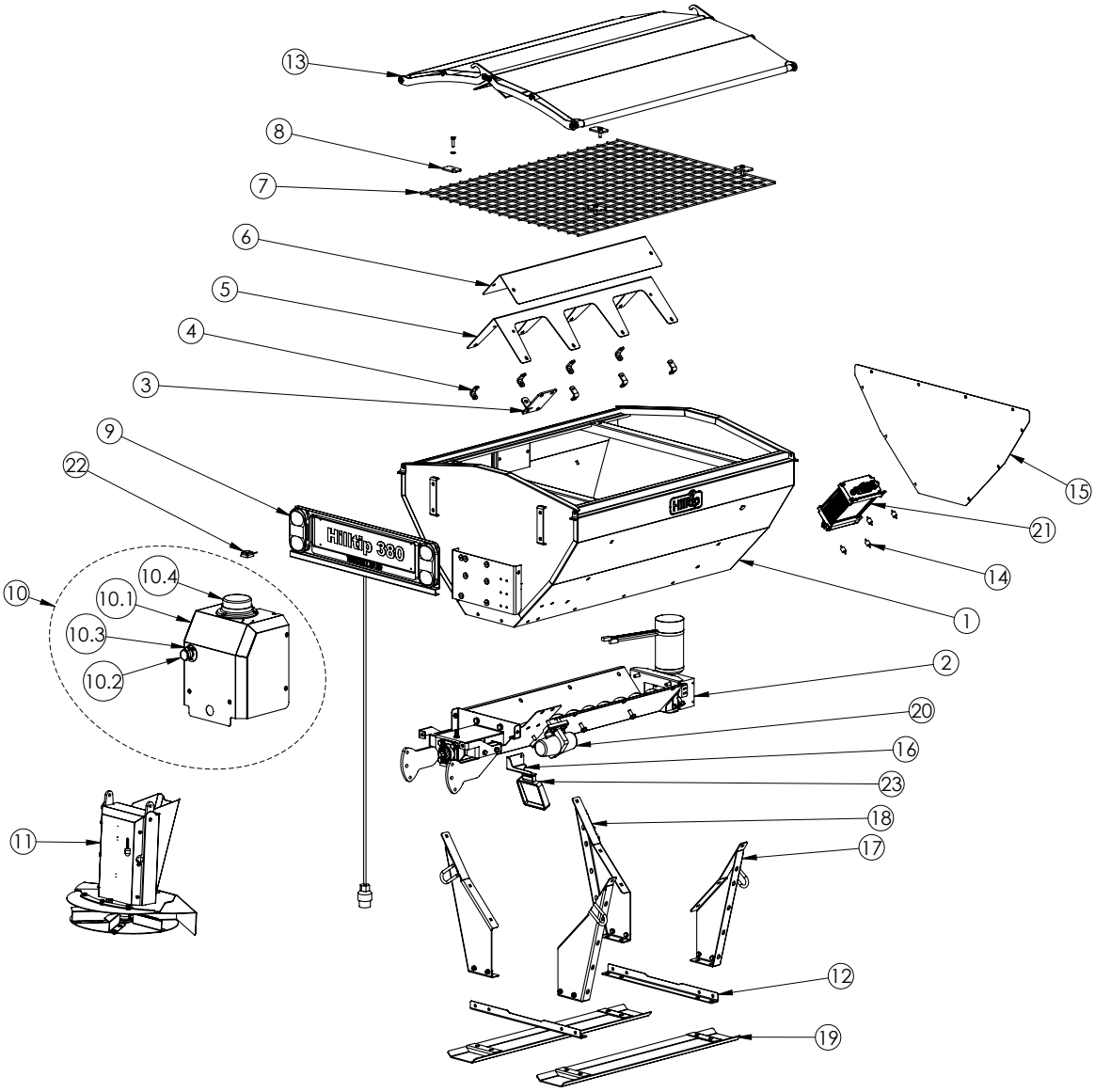

SPREADER ASSEMBLY

Item	Qty	Part no.	Description
1	1	H24835	Spreader body
2	1	H24817	Bottom chute preassembly
3	1	H24850	Vibrator support
4	7	H24853	Bracket
5	1	H24854	Invert V
6	1	H24855	Invert V reduction plate
7	1	H24859	Top screen
8	4	H21763	Bracket
9	1	H21307	Rear light & license plate kit
	1	H22401	Driver side
	1	H22402	Passenger side
	1	H22071	Cable/7-pin harness
	1	H23436	Cable/13-pin harness
10	1	H24871	Cover assembly
10.1	1	H24860	Cover
10.2	1	H22220	Emergency stop button
10.3	1	H27644	Emergency stop protective cover
10.4	1	H22224	Beacon light
11	1	H24418	Chute pre-assembly (short)
	1	H25110	Chute pre-assembly (medium, +15 cm)
	1	H24465	Chute pre-assembly (long, +25 cm)
12	2	H24856	Side support link
13	1	H24861	Cover kit
14	4	H24870	Vibration damper
15	1	H24857	Front cover plate
16	1	H24869	Bracket for worklight
17	2	H25146	Leg RH
18	2	H25147	Leg LH
19	2	H25148	Rail
20	1	H22218	Vibrator
21	1	H22096	Spreader module
22	1	H22098	GPS antenna
23	1	H21864	LED work ight red (optional)
	1	H26681	LED work light white (optional)

ELECTRICAL COMPONENTS

Item	Part no.	Description
ns	H22753	Vehicle side harness assembly
ns	H22120	Extension harness 5m (optional)
ns	H23205	Extension harness 2m (optional)
ns	H21913	Controller Assembly
ns	H25054	Spreader side harness
ns	H22758	Spreader side harness to vehicle side harness (battery + data cable)
ns	H22096	Spreader module
ns	H22098	GPS antenna
ns	H22756	Vehicle side 8-pin harness
ns	H22761	Spreader side 8-pin harness (out in front)
ns	H22223	LED Worklight (optional)
ns	H23084	Work light split adapter cable (optional)

ns = not shown

CONTROLLER ASSEMBLY H21913

Item	Qty	Part no.	Description
1	1	H22739	Controller front
2	1	H22975	Controller circuit assembly
3	1	H22960	RAM mount

CABLES

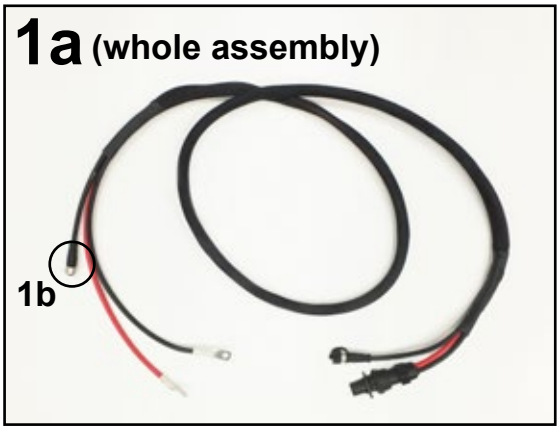

1a. **H22758** Spreader side harness to vehicle side harness (battery + data cable)
1b. **H22761** Spreader side 8-pin harness 2m

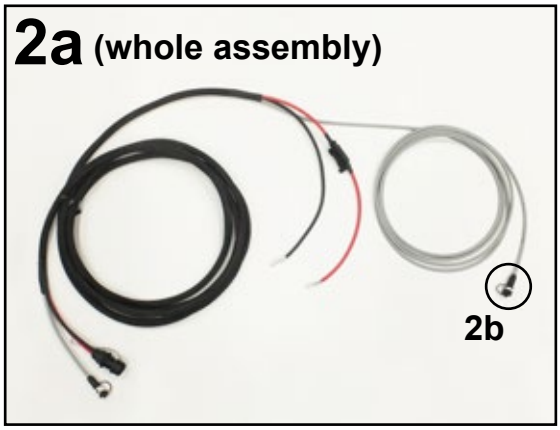

2a. **H21694** Vehicle side harness assembly
2b. **H22756** Vehicle side 8-pin harness

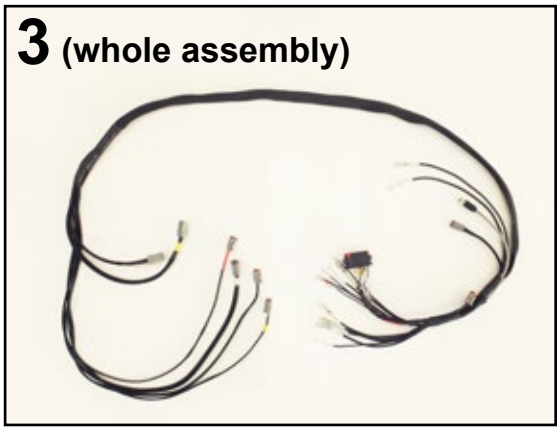

3. **H25054** Spreader side harness

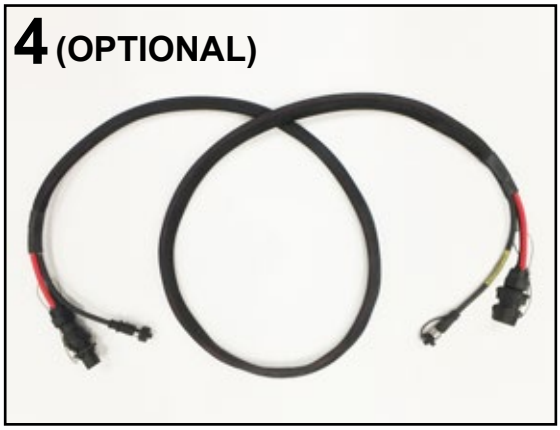

4. **H23205** Optional extension harness, 2m
H22120 Optional extension harness, 5m

HEAVY DUTY HARNESS (OPTIONAL)

H30374 Vehicle side harness, Heavy Duty
H30375 Spreader side harness, Heavy Duty

See page 11-15 for list of cable connectors.

CHUTE ASSEMBLY

Item	Description	Qty	Part no		
			Short	*Medium (+15 cm)*	*Long (+25 cm)*
	Chute assembly	1	H24418	H25110	H24465
1	Spinner assembly	1	H23081		
2	Spinner cover	1	H22519		
3	Chute	1	H22523	H25111	H24466
4	Cover	1	H22522	H25115	H24469
5	Motor gearbox assembly	1	H24419		
6	Bracket	1	H22521		
7	Washer	1	H23134		
8	Lockbolt M8x20 A4 ISO 8677	3	HF10935		
9	Bolt M6x25 DIN 912 A4	4	HF10440		
10	Nylock M8 A4	3	HF10513		
11	Hexagon socket head bolt		HF19122 (6 pcs / 8 pcs / 8 pcs)		
12	Index plunger	1	H22644		
13	Pipe linch pin 10x60	2	H23210		
14	Nyloc DIN 985 M12 A4	3	HF10504		
15	Washer DIN 125 M12 A4	6	HF10480		
16	Thread bar M12	1	H25841		
17	Washer	3	H25140		
18	DIN 912 M12x30 A4	1	HF10390		
19	Cable gland M20x1,5	1	H21901		
20	Cable gland nut M20	1	H25842		

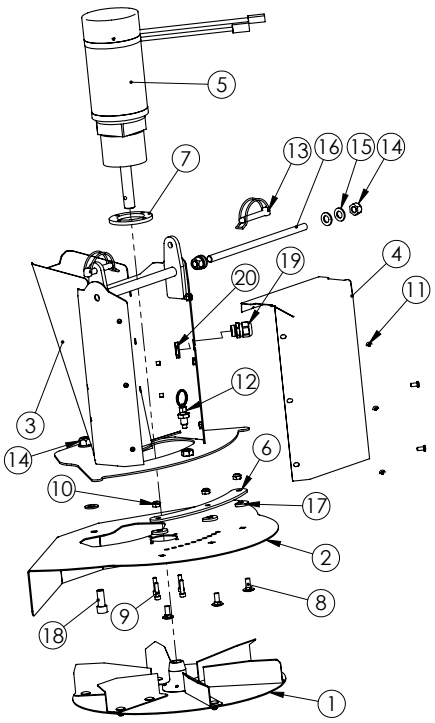

SHORT chute - H24418
MEDIUM chute - H25110
LONG chute - H24465

SPINNER ASSEMBLY - H23081

Item	Qty	Part no.	Description
1	1	H23082	LASERCUT 390 x 390 × 2
2	6	H23083	Wing plate
3	1	H21756	Ø60-52
4	12	HF19113	Lockbolt M6x12 A4
5	12	HF10501	WasherM6 A4 DIN 127
6	12	HF10512	LOCK NUT M6 A4 DIN985
7	5	HF10436	In Hex Bolt M6x10 DIN 4762
8	1	HF19114	Socket set screw M6x25 A2 ISO4026

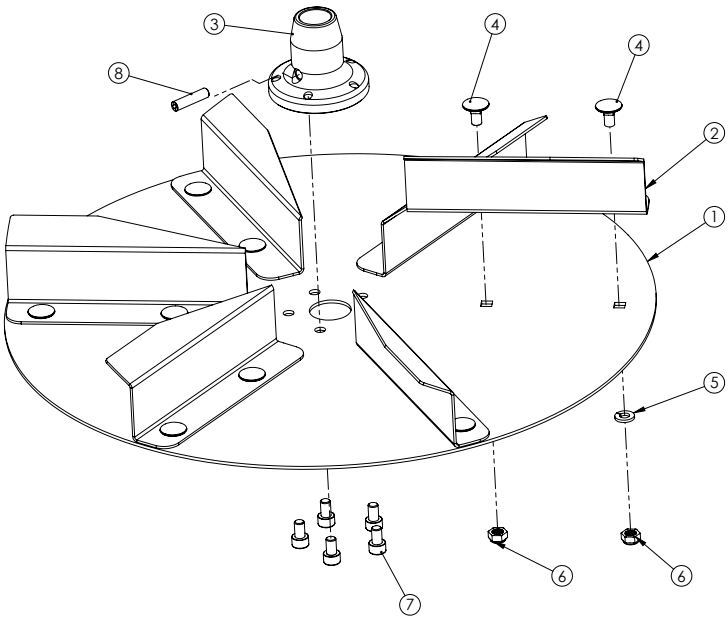

AUGER DRIVE ASSEMBLY

Item	Qty	Part no.	Description
1	1	H24818	Bottom shute
2	1	H24826	Screw
3	2	H24829	Shute bracket
4	1	H25153	Mounting plate
5	1	H23127	Flange bearing unit stainless
6	1	H28599	Motor gearbox assembly
7	1	H22081	Retaining ring
8	1	H22082	Parallel key
9	4	HF10674	Hex Bolt M10x30
10	4	HF10503	Lock nut M10
11	8	HF10479	Washer
12	4	HF10743	Hex Bolt M8x20
13	12	HF10492	DIN 125 M8 A4
14	8	HF10513	Nylock M8 A4
15	4	HF10459	DIN 912 M8x25 A4

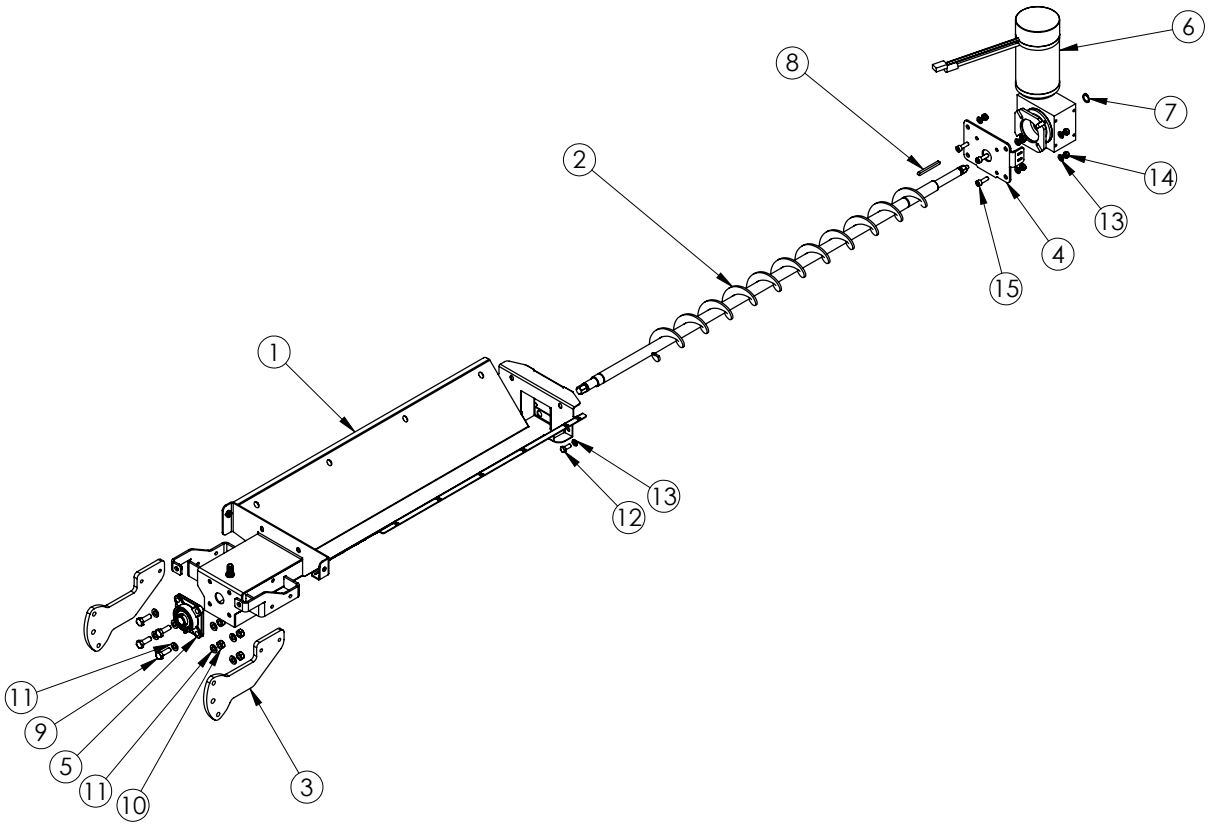

SPINNER MOTOR GEARBOX ASSEMBLY H24419

Item	Qty	Part no.	Description
1	1	H22732	Gearbox
2	1	H22216	Electrical motor

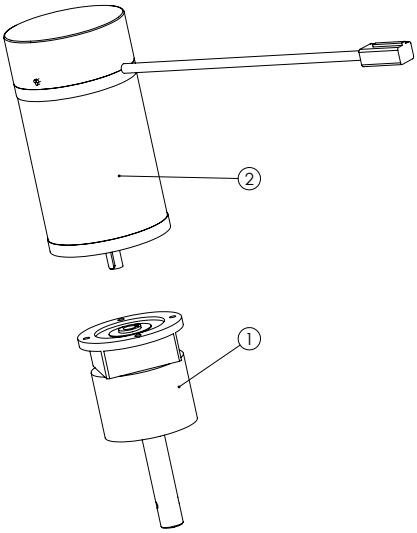

AUGER MOTOR GEARBOX ASSEMBLY - H28599

Item	Qty	Part no.	Description
1	1	H25649	Gearbox for Plus spreaders
2	1	H24794	Motor Assembly
3	4	H26588	Brush for electrical motor

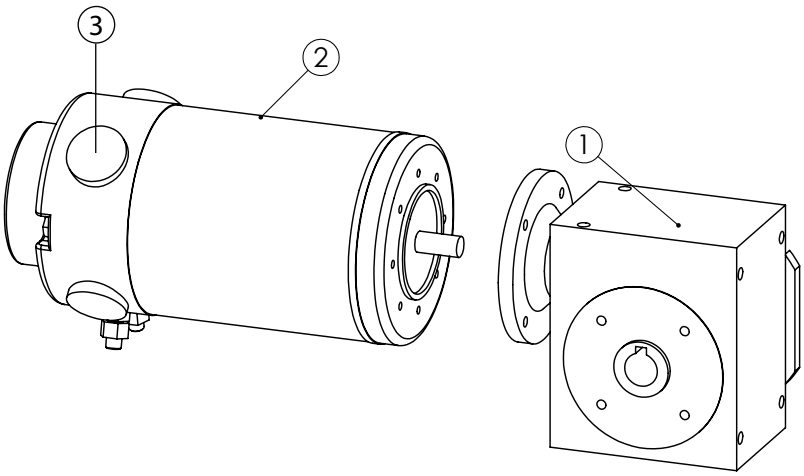

COVER ASSEMBLY H24861

Item	Qty	Part no.	Description
1	2	H24863	Pipe assembly - short
2	4	H24865	Pipe assembly - long
3	2	H24862	Cover
4	4	H24867	Arm
5	4	H24868	Washer
6	4	H24873	Bush
7	2	H22488	Hook
8	4	HF19375	Hexagon socket head bolt
9	8	HF19118	Hexagon socket head bolt

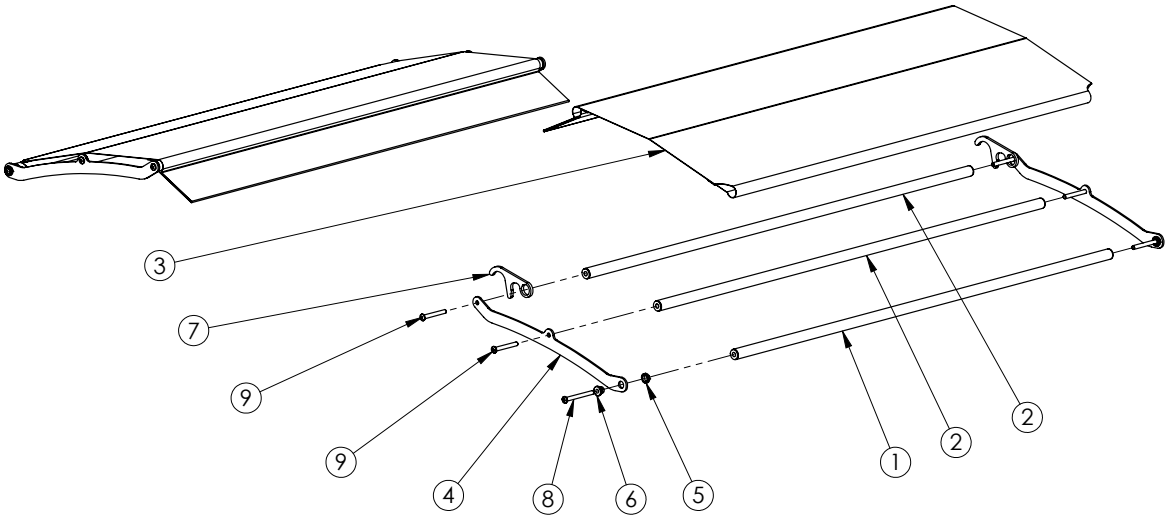

CONNECTORS

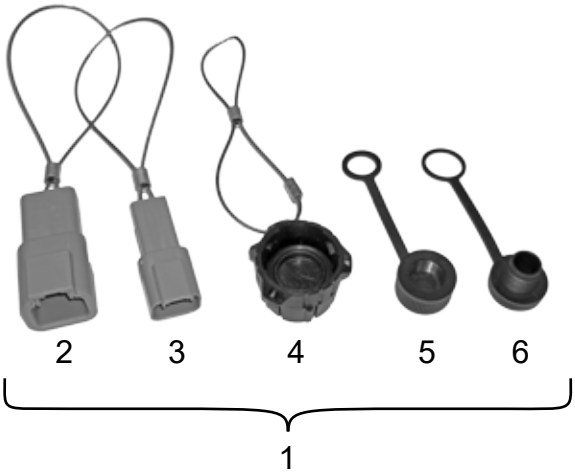

Item	Qty	Part no.	Description
1	1	H23361	Endcap kit
2	1	H22305	Protective cap ATP
3	1	H22304	Protective cap AT
4	1	H23360	Protective sealing cap
5	1	H22168	Sealing Cap female
6	1	H22169	Sealing Cap male

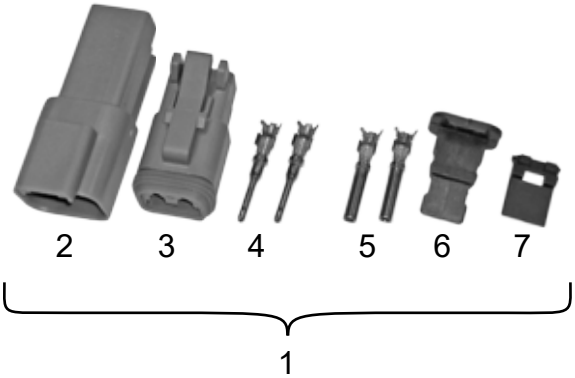

Item	Qty	Part no.	Description
1	1	H23366	DT connector kit 1mm^2
2	1	H21879	Receptacle, 2-Way
3	1	H21877	Plug, 2-way
4	2*	H21883	Male Contact - Pin 0,823-1,31mm^2
5	2*	H21881	Female Contact - Socket 0,823-1,31mm^2
6	1	H21878	Wedgelock Plug, 2-Way
7	1	H21880	Wedgelock Recep., 2-Way

**minimum order quantity: 20 pcs*

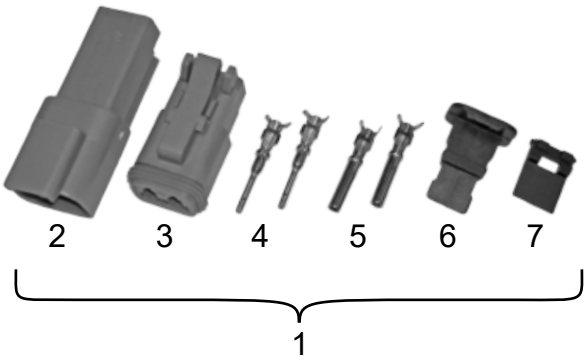

Item	Qty	Part no.	Description
1	1	H23367	DT connector kit 2,5mm^2
2	1	H21879	Receptacle, 2-Way
3	1	H21877	Plug, 2-way
4	2*	H21882	Male Contact - Pin 1,31-2,08mm^2
5	2*	H21876	Female Contact - Socket 1,31-2,08mm^2
6	1	H21878	Wedgelock Plug, 2-Way
7	1	H21880	Wedgelock Recep., 2-Way

**minimum order quantity: 20 pcs*

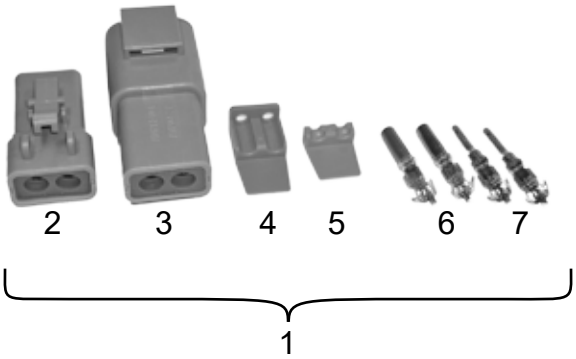

Item	*Qty*	*Part no.*	*Description*
1	1	H23368	DTP Connector kit
2	1	H21888	Plug, 2-way
3	1	H21886	Receptacle, 2-Way
4	1	H21889	Wedgelock Plug, 2-Way
5	1	H21887	Wedgelock Recep., 2-Way
6	2*	H21884	Female Contact - Socket 2,08-3,31mm^2
7	2*	H21885	Male Contact - Pin 2,08-3,31mm^2

**minimum order quantity: 20 pcs*

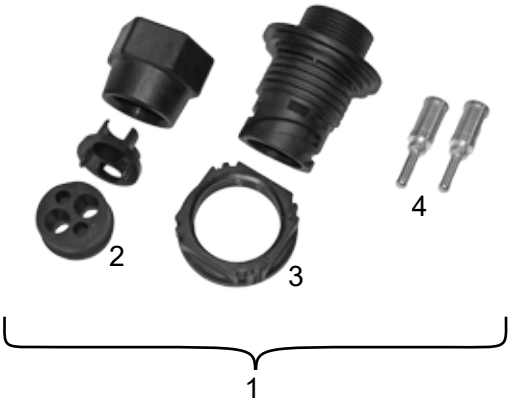

Item	Qty	Part no.	Description
1	1	H23364	Battery cable connector kit - *vehicle side*
2	1	H21923	Sealing set
3	1	H21847	Connector housing
4	2*	H21850	Crimp pin

**minimum order quantity: 20 pcs*

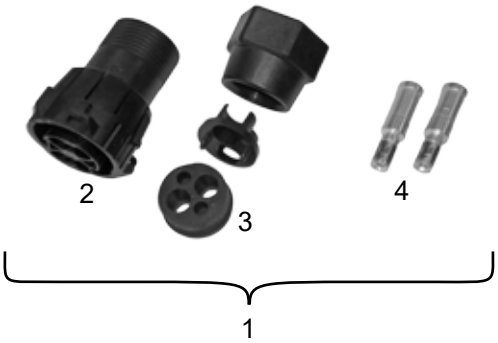

Item	Qty	Part no.	Description
1	1	H23365	Battery cable connector kit - *spreader side*
2	1	H21853	Connector housing
3	1	H21923	Sealing set
4	2*	H21851	Crimp pin

**minimum order quantity: 20 pcs*

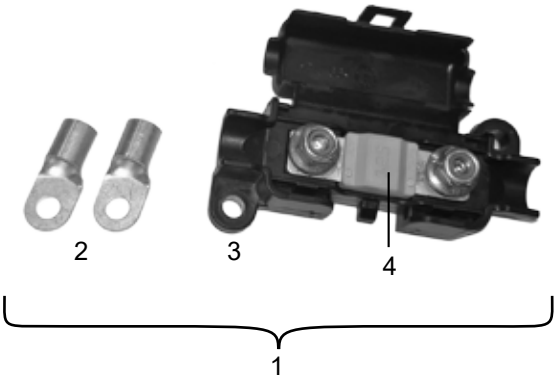

Item	Qty	Part no.	Description
1	1	H23371	Fuse holder accessories
2	2	H21933	Connector 5-16mm^2
3	1	H21868	Fuse holder midval
4	1	H21869	Fuse Midval 80A

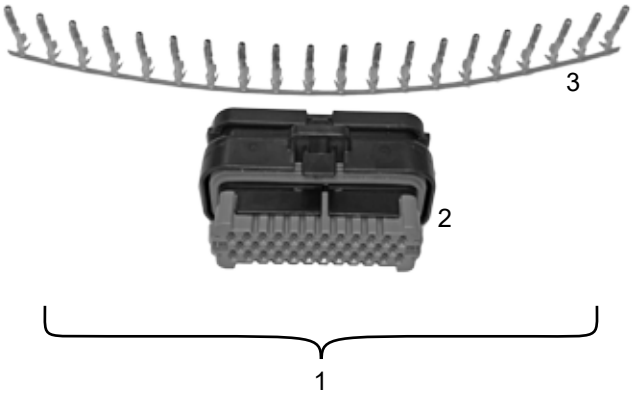

Item	Qty	Part no.	Description
1	1	H23369	IO module connector kit
2	1	H21955	Connector Housing AMPSEAL 35 pin
3	20	H21956	Female Contact - Socket

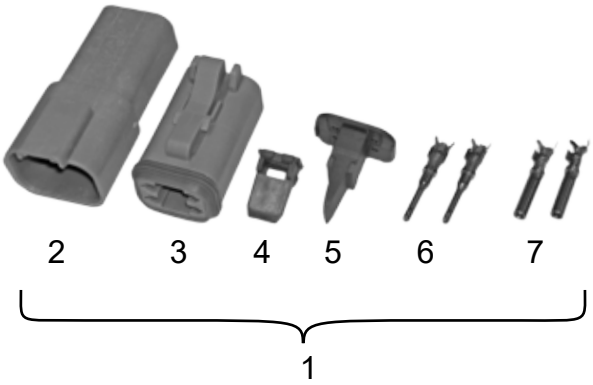

Item	Qty	Part no.	Description
1	1	H23370	Rear lights connector kit
2	1	H21910	Receptacle, 4-Way
3	1	H21908	Plug, 4-Way
4	1	H21911	Wedgelock Recep., 4-Way
5	1	H21909	Wedgelock Plug, 4-Way
6	2*	H21883	Male Contact - Pin 0,823-1,31mm^2
7	2*	H21881	Female Contact - Socket 0,823-1,31mm^2

**minimum order quantity: 20 pcs*

1

Item	Qty	Part no.	Description
1	1	H23529	Dielectric grease, 50g

1

Item	Qty	Part no.	Description
1	2	H21935	Connector for auger, 8-4 mm^2

HEAVY DUTY CONNECTORS

Item	Qty	Part no.	Description
1	1	H30151	Vehicle side harness connector
2	1	H30152	Terminal kit (8 pcs 0,5mm^2)
3	1	H30145	Insert module
4	1	H25796	Insert module
5	1	H25763	Carrier frame
6	1	H25764	Cable gland
7	1	H25803	Cover
8	1	H25765	Housing

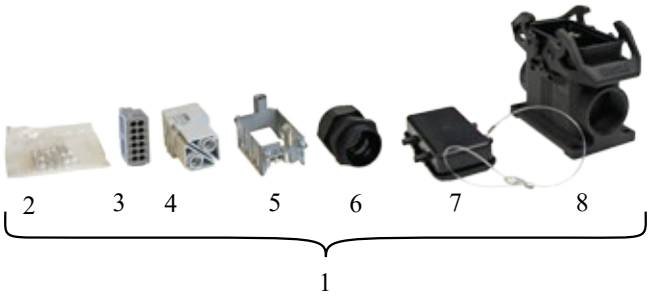

9	1	H26129	Fuse holder midval small
10	1	H22885	Fuse midval 125 A, pink
11	2	H24273	Connector 5mm 25 mm^2

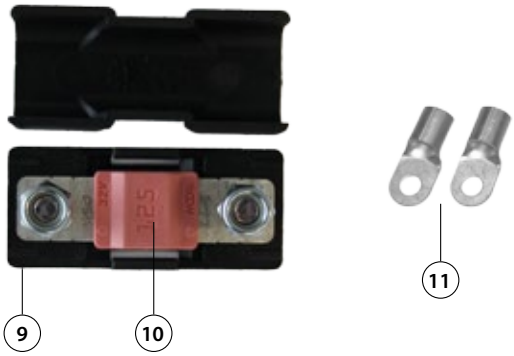

Item	Qty	Part no.	Description
1	1	H30150	Spreader side harness connector
2	1	H30153	Terminal kit (5 pcs 1,0 mm^2)
3	1	H26625	Insert module
4	1	H25759	Carrier frame
5	1	H25800	Insert module
6	1	H25760	Cable gland
7	1	H25828	Housing

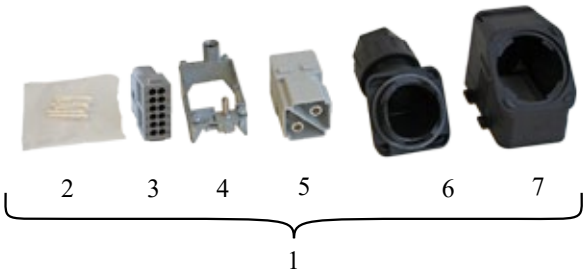

Item	Qty	Part no.	Description
1	1	H30313	Spreader side harness connector cover

Oy Hilltip Ab

Pukkisaarentie 6
FIN-68600 Pietarsaari
Finland

Phone: +358 50 5983 026
Phone: +358 50 3659 415

www.hilltip.com
info@hilltip.com

Construction, specifications and other details are subject to change without notice.