SPARE PARTS MANUAL

MEAN GREEN
MOWER STALKER SO 122

MG SK 122-48 spare parts list EN

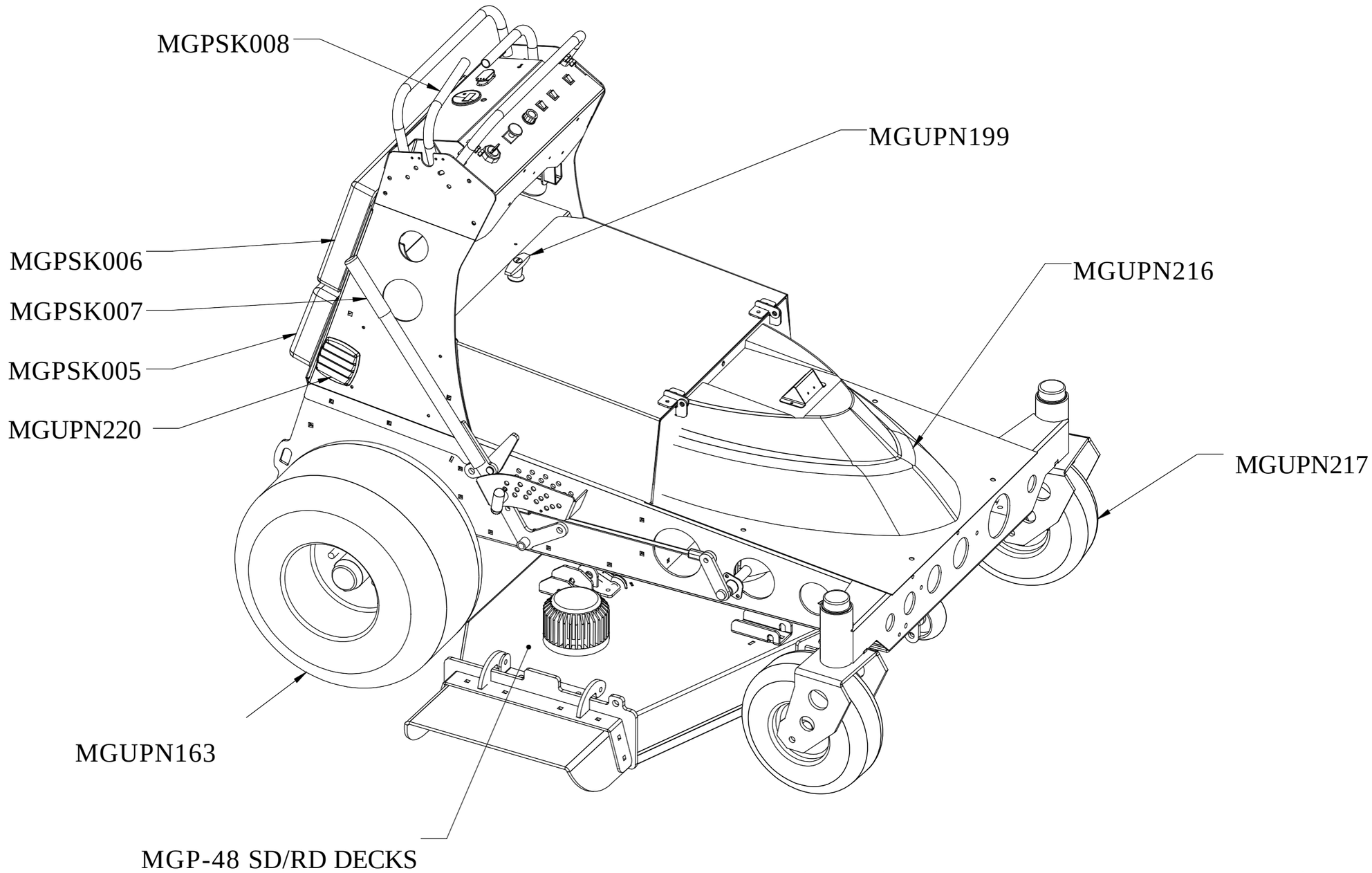

				DRAWN BY	M.HAYES	03/27/19		MADE IN THE U.S.A
				CHECKED BY				
				EXTERIOR PARTS				
X	X	X	X				DRAWING NO.	REV.
REV	DESCRIPTION	DATE	BY				MGPSK1301	

	DRAWING NO, MGPSK1301	
PART NUMBER	DESIGNATION	QTE
MGPSK005	**LOWER PAD**	**1**
MGPSK006	**UPPER PAD**	**1**
MGPSK007	**DECK ADJUST GRIP**	**1**
MGPSK008	**CONTROL HANDLE GRIP**	**2**
MGUPN199	**T-HANDEL BATTERY COVER LATCH (WBX,STK,CXR 11-18)**	**1**
MGUPN216	**FRONT HOOD**	**1**
MGUPN217	**FRONT WHEEL ASSEMBLY**	**2**
MGUPN220	**VENTILATION GRID**	**2**
MGUPN163	**REAR TWEEL-20**	**2**

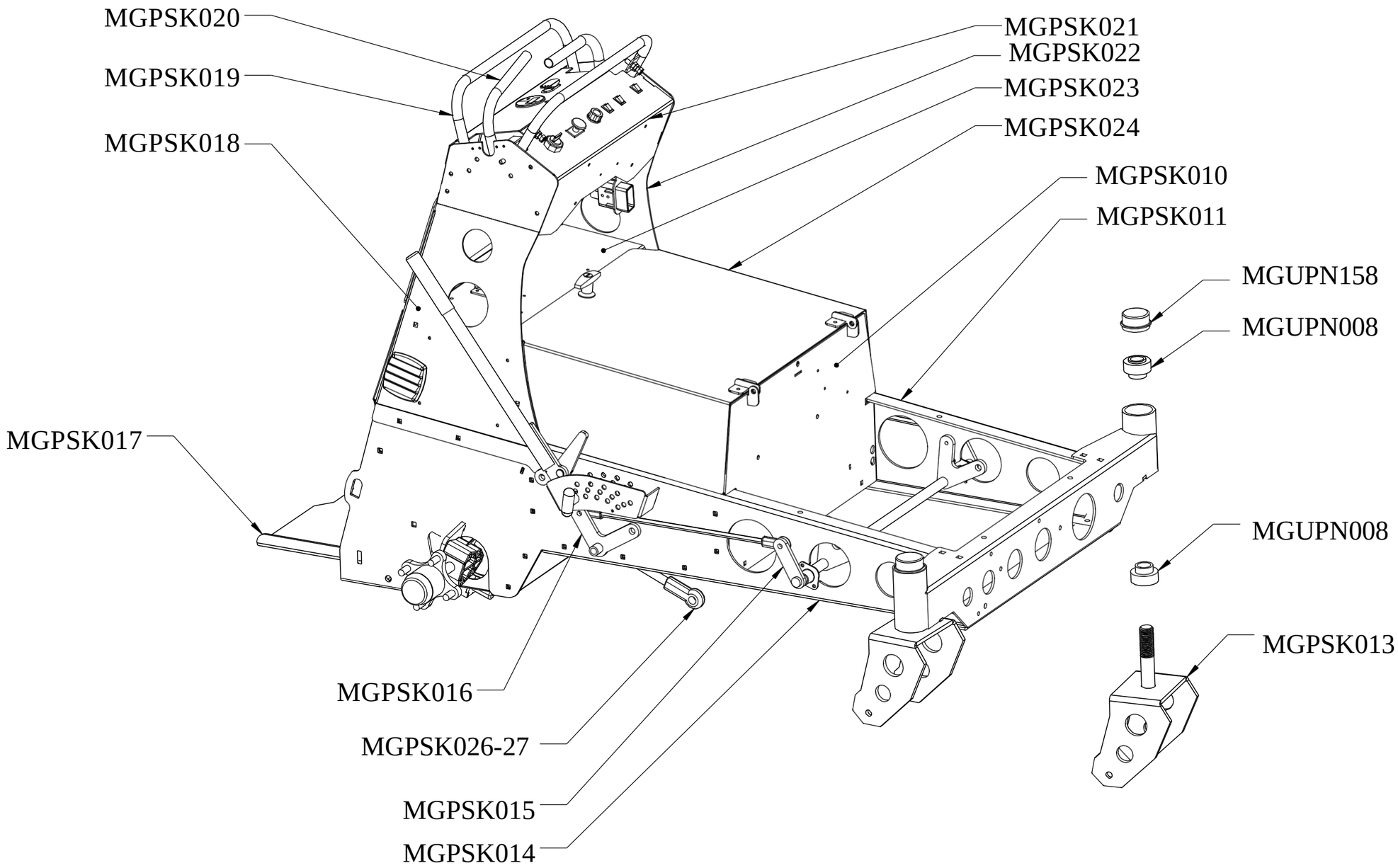

				DRAWN BY	M.HAYES	03/27/19		MADE IN THE U.S.A
				CHECKED BY				
				MAIN CHASSIS				
X	X	X	X				DRAWING NO.	REV.
REV	DESCRIPTION	DATE	BY				MGPSK1302	

	DRAWING NO, MGPSK1302	
PART NUMBER	DESIGNATION	QTE
MGUPN008	FRONT YOKE BEARING	4
MGUPN158	SPINDLE CAP	2
MGPSK010	FRONT BULKHEAD	1
MGPSK011	LEFT SIDERAIL	1
MGPSK013	FRONT YOKE	2
MGPSK014	RIGHT SIDERAIL	1
MGPSK015	DECK LIFT BAR ASSEMBLY	1
MGPSK016	DECK ADJUST HANDLE	1
MGPSK017	FOOT PAD	1
MGPSK018	RIGHT TOWER	1
MGPSK019	HAND BAR	1
MGPSK020	CONTROL BAR	2
MGPSK021	CONTROL PANEL	1
MGPSK022	LEFT TOWER	1
MGPSK023	REAR BULKHEAD	1
MGPSK024	BOX LID	1
MGPSK026	RIGHT STABALIZER ASSEMBLY	1
MGPSK027	LEFT STABALIZER ASSEMBLY	1

MGE GREEN SERVICE

MEANGREEN MOWERS

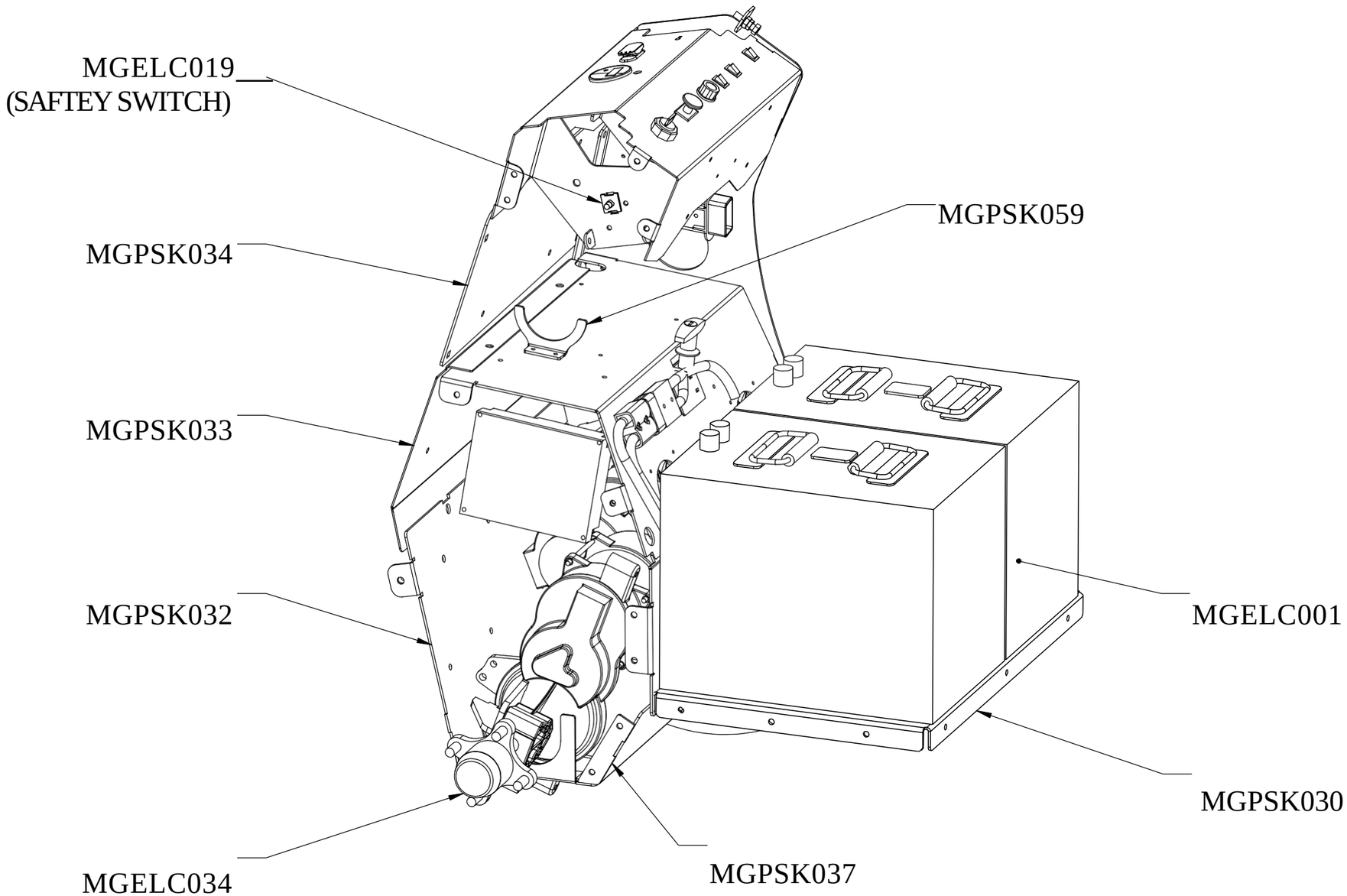

				DRAWN BY	M.HAYES	03/27/19		MADE IN THE U.S.A
				CHECKED BY				
				INNER CHASSIS				
X	X	X	X				DRAWING NO.	REV.
REV	DESCRIPTION	DATE	BY				MGPSK1303	

	DRAWING NO, MGPSK1303	
PART NUMBER	DESIGNATION	QTE
MGELC001	**48V 140AH Bat. Module**	**1 / 2**
MGELC019	**SAFETY SWITCH**	**2**
MGELC034	**HYDROGEAR DRIVE 1.7 KW**	**2**
MGPSK030	**BATTERY FLOOR**	**1**
MGPSK032	**REAR DRIVE PLATE**	**1**
MGPSK033	**ELECTIONICS COVER PLATE**	**1**
MGPSK034	**PAD MOUNTING PLATE**	**1**
MGPSK037	**FRONT DRIVE PLATE**	**1**
MGPSK059	**BLOWER NOZZLE SUPPORT**	**1**

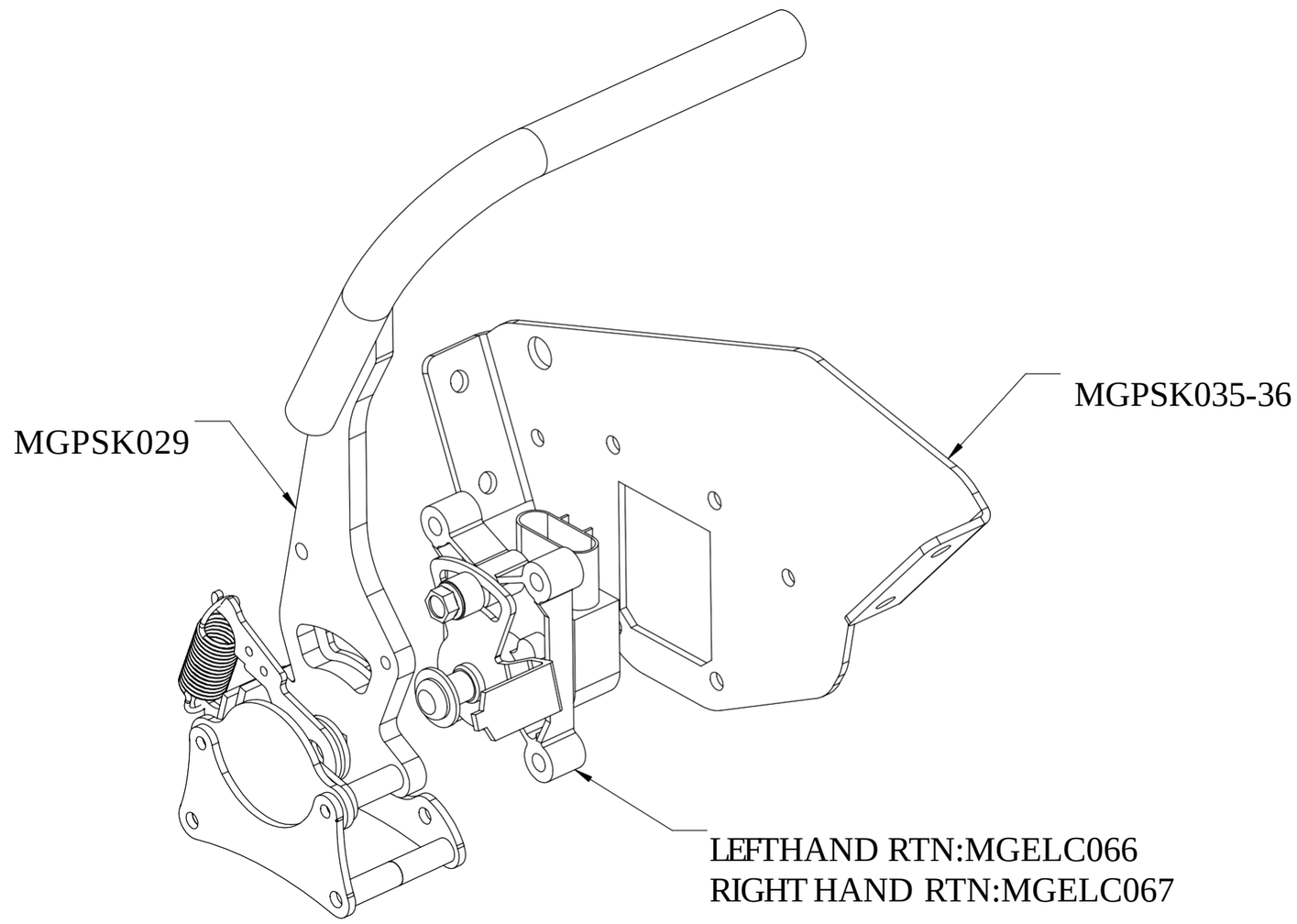

				DRAWN BY	M.HAYES	03/27/19		MADE IN THE U.S.A
				CHECKED BY				
				RTN CONTROLS				
X	X	X	X				DRAWING NO.	REV.
REV	DESCRIPTION	DATE	BY				MGPSK1308	

	DRAWING NO, MGPSK1308	
PART NUMBER	DESIGNATION	QTE
MGELC066	**RTN-LEFT HAND SIDE**	**1**
MGELC067	**RTN-RIGHT HAND SIDE**	**1**
MGPSK029	**RTN ROTATION BRACKET**	**2**
MGPSK035	**RIGHT CONROL PLATE**	**1**
MGPSK036	**LEFT CONTROL PLATE**	**1**

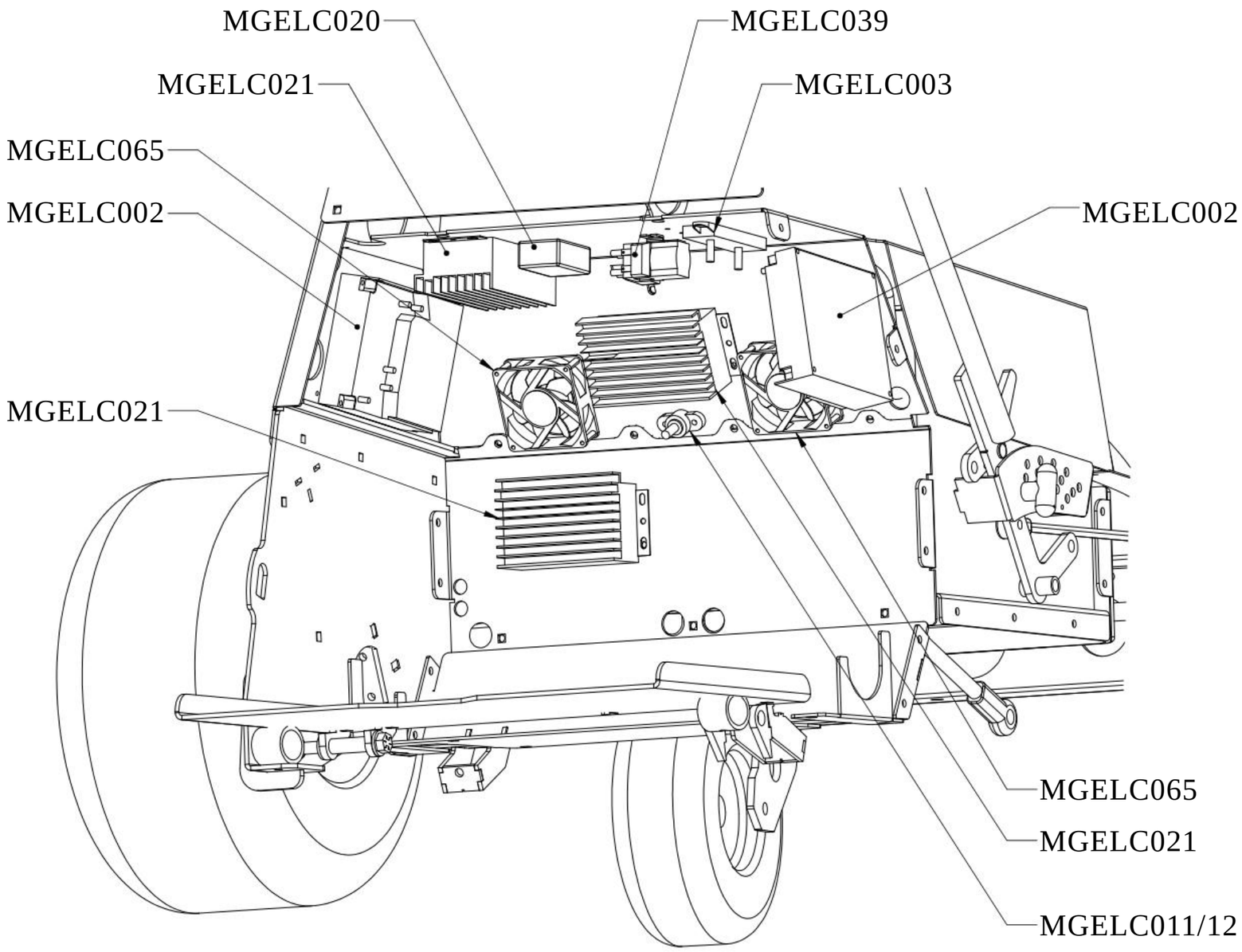

				DRAWN BY	M.HAYES	03/27/19	MEAN GREEN MOWERS	MADE IN THE U.S.A
				CHECKED BY				
				ELECTRONICS BAY				
X	X	X	X				DRAWING NO.	REV.
REV	DESCRIPTION	DATE	BY				MGPSK1305	

	DRAWING NO, MGPSK1305	
PART NUMBER	DESIGNATION	QTE
MGELC002	**SMART TEC DRIVE CONTROLLER ZT (HG)(BLACK)**	**2**
MGELC003	**MAIN FUSE BLOCK 400 AMP**	**1**
MGELC011	**GROUND PLUG BLACK**	**1**
MGELC012	**GROUND PLUG RED**	**1**
MGELC020	**BLADE CONTROL BOX (BLACK BOX)**	**1**
MGELC021	**48V UNIVERSAL BLADE CONTROLLER(LS 1.5 KW)**	**3**
MGELC039	**HG 48V CONTACTOR (2 POST)**	**1**
MGELC065	**FAN**	**2**

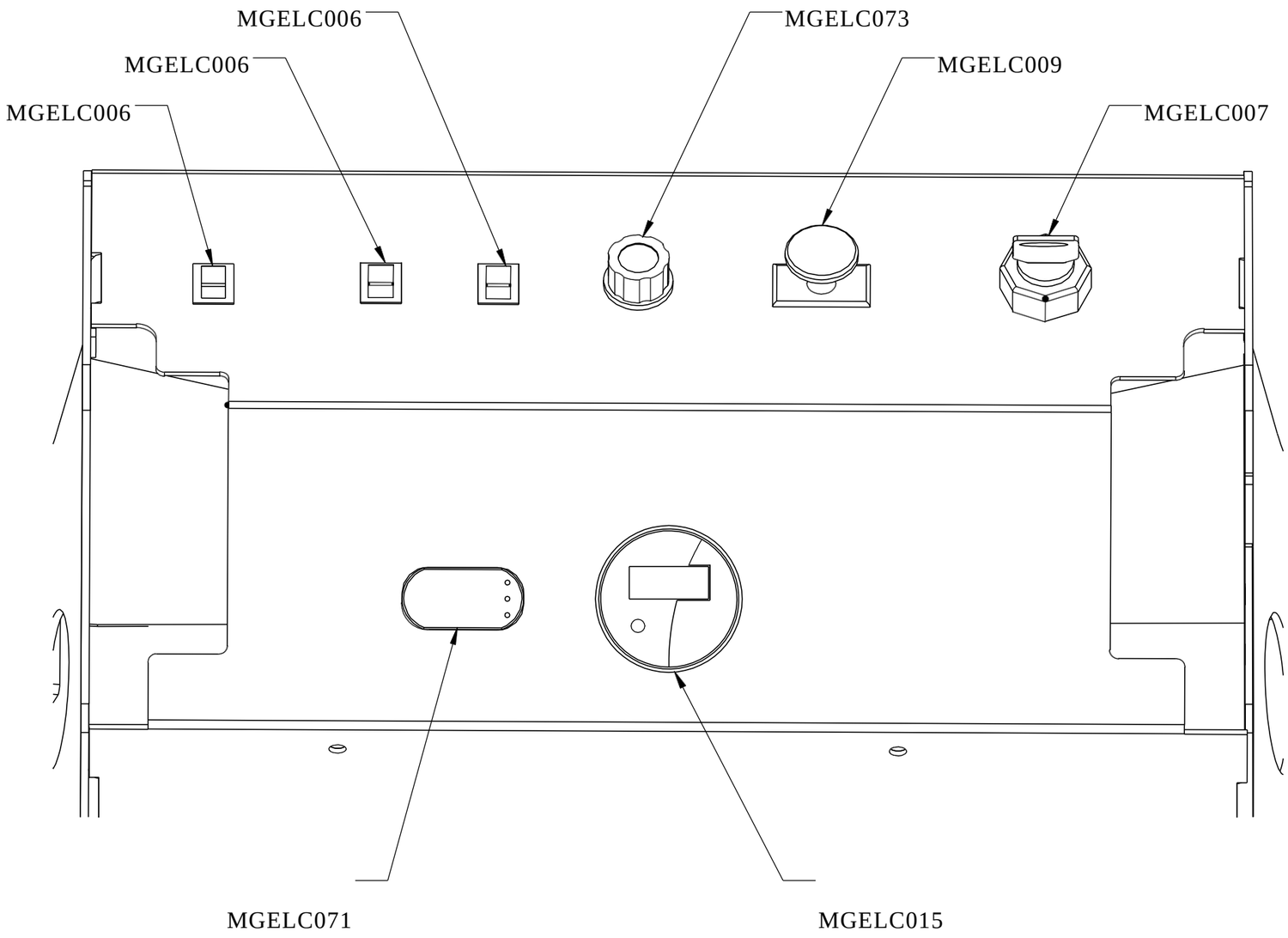

				DRAWN BY	M.HAYES	03/27/19		MADE IN THE U.S.A
				CHECKED BY				
				CONTROL PANEL				
X	X	X	X				DRAWING NO.	REV.
REV	DESCRIPTION	DATE	BY				MGPSK1304	

	DRAWING NO, MGPSK1304	
PART NUMBER	DESIGNATION	QTE
MGELC006	**HIGH LOW SWITCH & LIGHTS SWITCH**	**3**
MGELC007	**KEY SWITCH**	**1**
MGELC009	**PTO SWITCH**	**1**
MGELC015	**DRIVE DIGITAL READ OUT**	**1**
MGELC071	**DECK HEIGHT SWITCH**	**1**
MGELC073	**STK BLOWER POWER SWITCH**	**1**

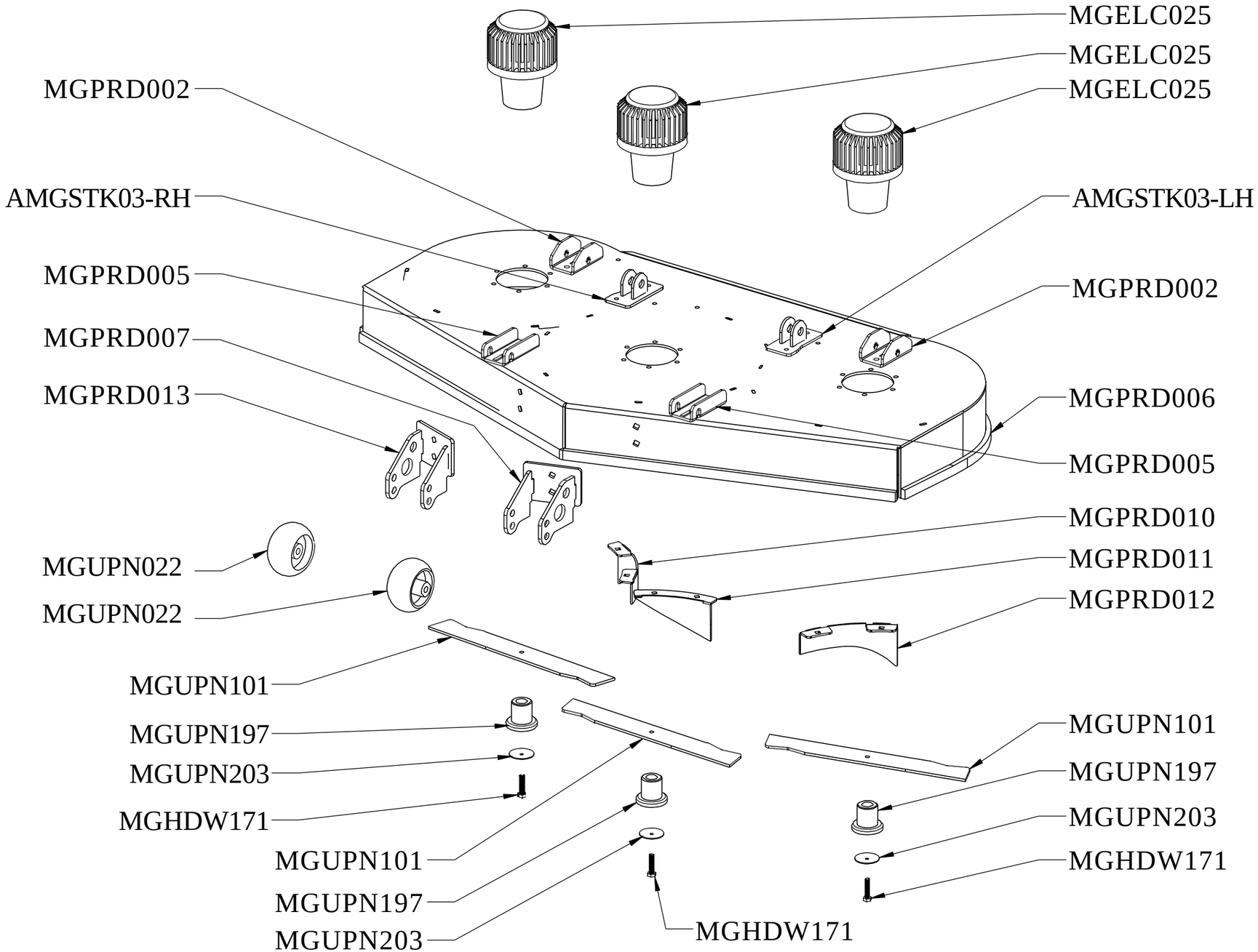

				DRAWN BY	M.HAYES	03/27/19		MADE IN THE U.S.A
				CHECKED BY				
				REAR DISCHARGE DECK				
X	X	X	X				DRAWING NO.	REV.
REV	DESCRIPTION	DATE	BY				MGPRD1306	

	DRAWING NO, MGPSK1306 REAR DISCHARGE + MULCHING	
PART NUMBER	DESIGNATION	QTE
AMGSTK06-RH	RIGHT STABALIZER ASSEMBLY	1
AMGSTK06-LH	LEFT STABALIZER ASSEMBLY	1
MGELC025	BLADE MOTOR (LS 1.5KW) BLK	3
MGHDW171	BLADE BOLT (LS 1.5KW) BLK	3
MGPRD002	REAR DECK MOUNT	2
MGPRD005	FRONT DECK MOUNT	2
MGPRD006	MAIN DECK	1
MGPRD007	LEFT SCALP BRACKET	1
MGPRD010	RIGHT MULCH BAFFLE	1
MGPRD011	CENTER MULCH BAFFLE	1
MGPRD012	LEFT MULCH BAFFLE	1
MGPRD013	RIGHT SCALP BRACKET	1
MGUPN022	SCALP WHEEL	2
MGUPN101	SK-48 BLADE RH	3
MGUPN197	BLADE HUB (LS 1.5KW) BLK	3
MGUPN203	COMPRESSION WASHER (SS/LS 1.5KW) BLK	3

MGE GREEN SERVICE

MEANGREEN MOWERS

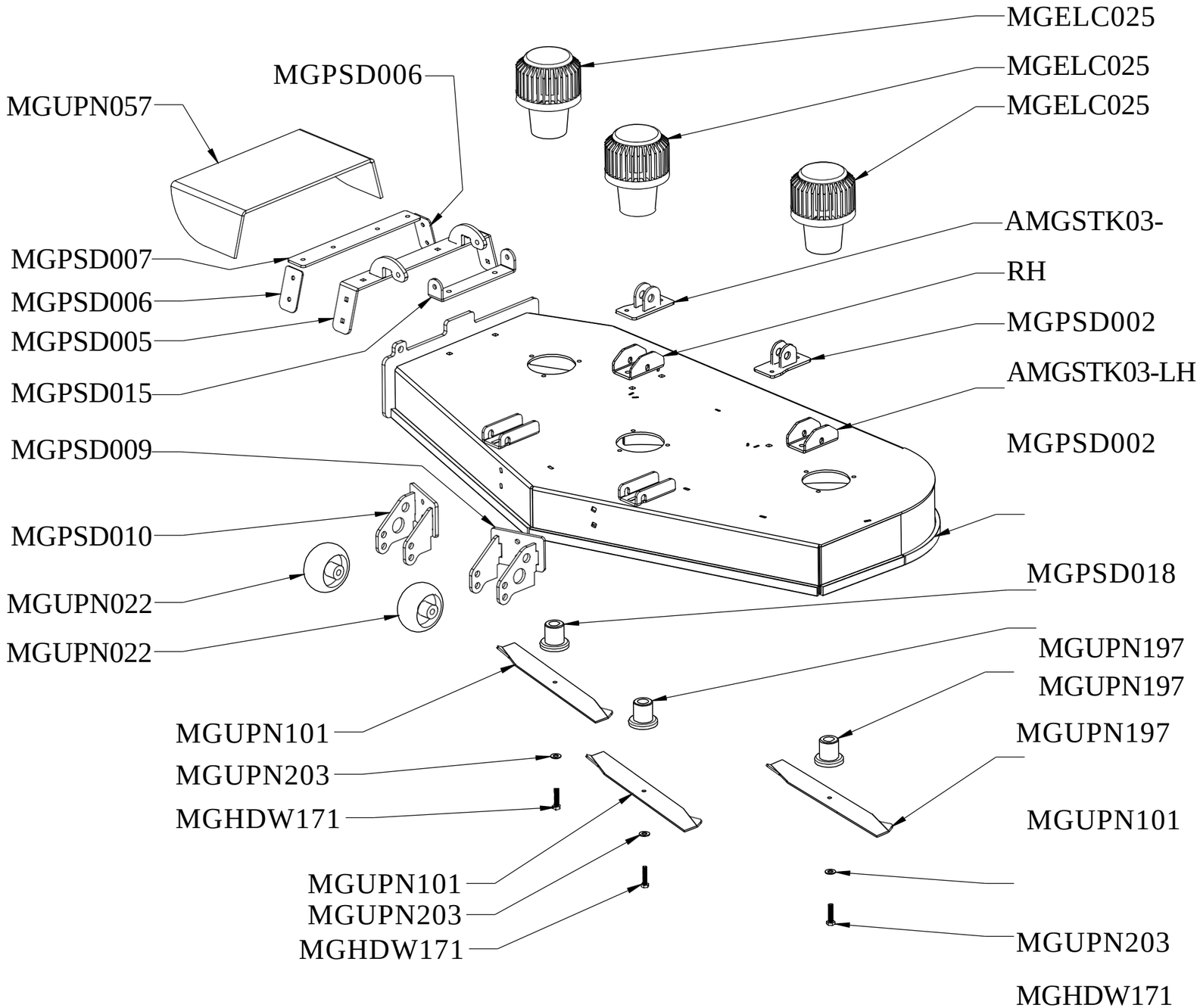

				DRAWN BY	M.HAYES	03/27/19		MADE IN THE U.S.A
				CHECKED BY				
				48" SIDE DISCHARGE				
X	X	X	X				DRAWING NO.	REV.
REV	DESCRIPTION	DATE	BY				MGPSD1307	

	DRAWING NO, MGPSK1307 SIDE DISCHARGE	
PART NUMBER	DESIGNATION	QTE
AMGSTK06-RH	RIGHT STABALIZER ASSEMBLY	1
AMGSTK06-LH	LEFT STABALIZER ASSEMBLY	1
MGELC025	BLADE MOTOR (LS 1.5KW) BLK	3
MGHDW171	BLADE BOLT (LS 1.5KW) BLK	3
MGPSD002	REAR DECK MOUNT	2
MGPSD005	OUTER CHUTE BRACKET	1
MGPSD006	CHUTE SIDE SQUEEZE PLATE	2
MGPSD007	CHUTE CENTER SQEEZE PLATE	1
MGPSD009	LEFT SCALP BRACKET	1
MGPSD010	RIGHT SCALP BRACKET	1
MGPSD015	CHUTE MOUNTING BRACKET	1
MGPSD018	MAIN DECK	1
MGUPN022	SCALP WHEEL	2
MGUPN057	RUBBER CHUTE	1
MGUPN101	SK-48 BLADE RH	3
MGUPN197	BLADE HUB (LS 1.5KW) BLK	3
MGUPN203	COMPRESSION WASHER (SS/LS 1.5KW) BLK	3

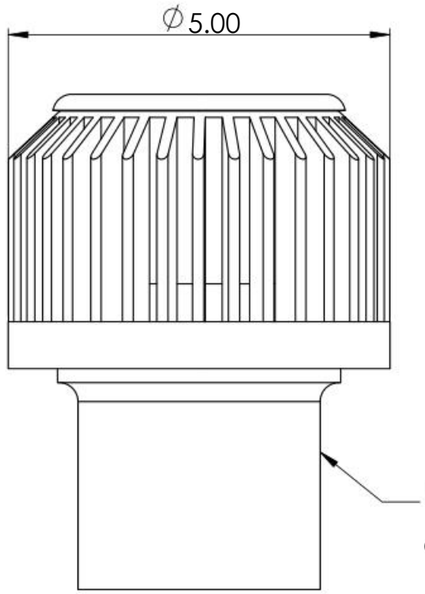

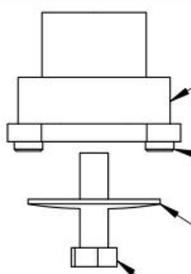

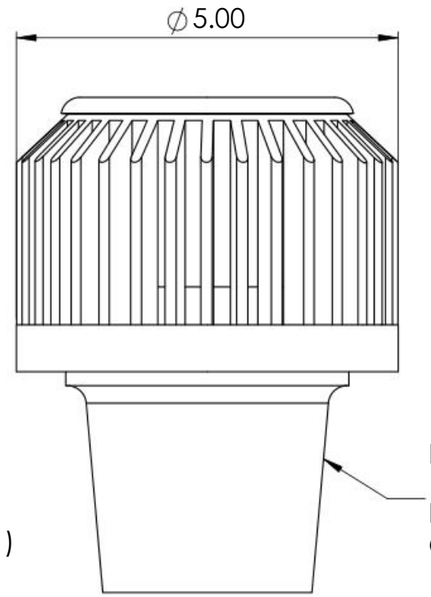

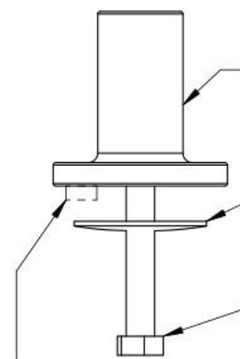

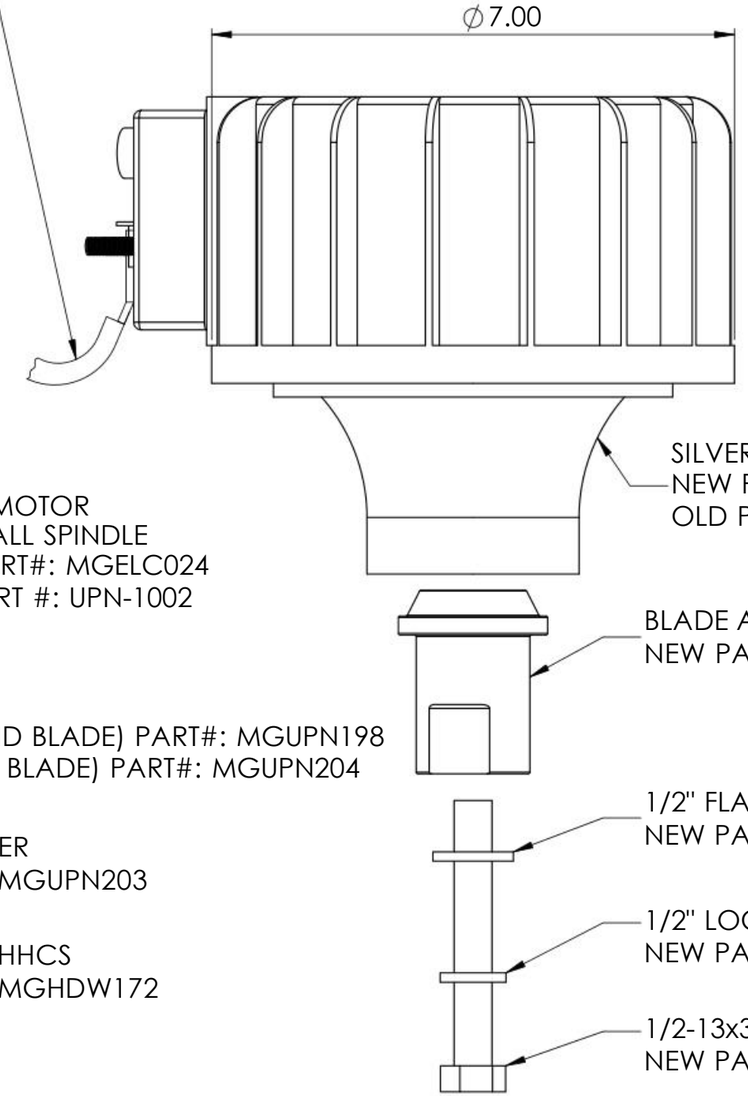

				DRAWN BY	M.HAYES	03/14/19
				CHECKED BY		
X	X	X	X	BLADE MOTORS		
REV	DESCRIPTION	DATE	BY			

MEAN GREEN MOWERS

MADE IN THE U.S.A

DRAWING NO. MGUPN205

REV.